City Council, Regular Meeting

AGENDA
Revised

December 6, 2016 **6:30 pm to 10:00 pm**

Call to Order

Roll Call

Pledge of Allegiance

Approval of Agenda

Presentations/Proclamations

- Government Financial Officers Association Award – Finance Department

Student Liaison Reports

Executive Session - Evaluating Qualifications of an Applicant pursuant to RCW 42.30.110(h)**,** Potential Property Acquisition pursuant to RCW 42.30.110(1)(b) and Potential Litigation pursuant to RCW 42.30.110(1)(i)

Public Comment

Note: *This is an opportunity for the public to address the Council. Three-minutes limit per person or five-minutes if representing the official position of a recognized community organization***.** *If you would like to show a video or PowerPoint, it must be submitted or emailed by 5 pm, the end of the business day, to the City Clerk, Melonie Anderson at manderson@sammamish.us. Please be aware that Council meetings are videotaped and available to the public.*

Consent Calendar

- Payroll for period ending November 15, 2016 for pay date November 18, 2016 in the amount of $ 348,895.03

1. **Approval:** Claims For Period Ending December 6, 2016 In The Amount Of $1,871,311.91 For Check No. 45929 Through 46091
2. **Ordinance:** Third Reading, Updating The Sammamish Stormwater Comprehensive Plan; Providing For Severability; And Establishing An Effective Date
3. **Contract:** Development Review Services/Site Development
4. **Contract Amendment:** Inglewood Stormwater Retrofit Project/Osborn
5. **Approval:** Minutes for the November 1, 2017 Regular Meeting

6. **Approval:** Minutes for the November 8, 2016 Special Meeting

Public Hearings

7. **Ordinance:** First Reading, Surface Water Design Manual

8. **Ordinance:** First Reading, Low Impact Development Code Update

9. **Ordinance:** First Reading, SE 4th Street Condemnation

10. **Ordinance:** Third Reading, Amending Title 14, Public Works Standards Of The Sammamish Municipal Code By Amending Chapter 14.01, Public Works Standards Adopted

Unfinished Business

11. **Resolution:** 2017 Comprehensive Plan Docket

12. **Ordinance:** Second Reading, Comprehensive Plan Amendments – Housing Elements

New Business

13. **Ordinance:** First Reading, Delegating authority to the City Manager over certain real property conveyances

Council Reports/ Council Committee Reports

City Manager Report

Adjournment

City Council meetings are wheelchair accessible. American Sign Language (ASL) interpretation is available upon request. Please phone (425) 295-0500 at least 48 hours in advance. Assisted Listening Devices are also available upon request.

AGENDA CALENDAR

Meeting Date	Packet Material Due	Time	Meeting Type	Topics
Dec 2016				
Mon 12/5		5:30 - 8:00 pm	Volunteer Recognition Dinner	
Tues 12/13	12/7	5:00 pm	Joint Special Meeting/w Planning Commission	<u>Joint Meeting</u> Discussion: Sign Code Amendments Discussion: Neighborhood Character <u>Special Meeting</u> Discussion: YMCA Property Public Hearing: Emergency Ordinance Tamarack Drainage Ordinance: Second Reading SE 4th Street Condemnation <u>Consent Agenda:</u> Ordinance:Second Reading Adopting Surface Water Design Manual Ordinance: Second Reading Adopting Low Impact Design Code Update Ordinance: Second Reading Delegating authority to the City Manager over certain real property conveyances Contract: Custodial Services/TBD Contract: Electrical Maintenance & Repair/Sequoyah Contract: Pressure Washing/Mr. Pressure Wash Contract: Building Commissioning/Ecotone Contract: HVAC Repair & Maintenance/Pacific Air Controls Contract: Keycard Access Maintenance/Western Hardware Contract: Plumbing Maintenance & Repair/Hermanson Contract: Roof Maintenance & Repair/TBD Contract: Parks Landscaping/Badgley's Contract: Sports Turf Maintenance/Rich Landscaping Inc. Contract: Residential Retention Pond Mowing/TBD Contract: ROW Landscaping/Badgley's Contract: ROW Slope Mowing/Plantscapes Contract: Street And Park Sweeping/Best Parking Contract: Vactor/Everson's Econo Vac

				Contract: Fence Repair/Industrial Solutions NW Contract: Tree Service/Swift Tree Care Inc. Contract: Environmental Services/TBD Contract: Legal Services/Kenyon Disend Contract: Public Defense Services/Stein, Lotzkar and Starr Contract: Prosectution Services/Moberly Amendment: Contested Case Contract: Recyling Events/Olympic Environmental Contract: On-Call Land Use Notice Boards/ Morup Signs Inc. Contract: On-Call Electrical Inspection Services/ West Coast Code Consultants Contract: On-Call Electrical Inspection Services/ BHC Consultants Contract: Arboriculture Services/ American Forest Management Contract: Arboriculture Services/ Herrera Environmental Consultants Inc. Contract: Building Inspection Services/ BHC Consultants Contract: Building Plan Review Services/ Clarity Consultants Contract: Environmental Review Services/ The Watershed Company Contract: Environmental Review Services/ ESA Contract Amendment:SE 4th Street Design/Perteet Contract/Appointment Hearing Examiner/Galt Appointment/Contract: Hearing Examiner/Galt
Tues 12/20	12/14	6:30 pm	Regular Meeting	**CANCELLED**
Jan 2017				
Tues 1/3	12/28	6:30 pm	Regular Meeting	Flag Ceremony Den 7 Troop 682
Tues 12/13 Continued				
Tues 1/10		6:30 pm	Study Session	Commission Interviews Discussion: Introduction to Regional Stormwater
Tues 1/17		6:30 pm	Regular Meeting	
Feb 2017				
Tues 2/7		6:30 pm	Regular Meeting	Ordinance: First Reading Emergency Management Resolution: Adopting Regional Coordination Framework (Emergency Management) <u>Consent Agenda</u> Contract: Parks, Recreation and Open Space Plan Update Contract/TBA
Tues 2/14		6:30 pm	Study Session	
Tues 2/21		6:30 pm	Regular Meeting	Ordinance: Second Reading Emergency Management

	To Be Scheduled	Parked Items	Parked Items
	• Economic Development Plan • Traffic Impact Fee Update • Department Reports • Discussion: Concurrency Ordinance • Comprehensive Plan Transportation Element (2017) • Contract: SE 24th St Sidewalk Design/TBD • Lake Sammamish Water Level	• Connectivity Model Process • Bid Award: 212th Way Repair (Snake Hill)/TBD • Contract: 212th Way Repair Construction Support/TBD • Final Acceptance: Inglewood Trunkline Porject • Bid Award: Beaver Lake Drive NTMP Project/TBD • Resolution: Private Property Surface Water Management Policy Resolution: Accepting the EHS Turf Replacement Project as Complete/Coast to Coast • Resolution: Final Acceptance Intelligent Transportation System Phase 1 Project	• Mountains to Sound Greenway • Sustainability/Climate Change • Review of regulations regarding the overlay areas, low impact development and special protection areas for lakes • Discussion: Inner City Bus Service • Good Samaritan Law

December 2016

Sun	Mon	Tue	Wed	Thu	Fri	Sat
27	28 **6:30 pm** Arts Commission Meeting	29	30	1 **9:00 am** Finance Committee Meeting - Canceled **6:30 pm** Planning Commission Meeting - Canceled	2 **9:30 am** Transportation Committee Meeting - Canceled **5:00 pm** Very Merry Sammamish	3
4	5 **6:00 pm** Volunteer Recognition Banquet 12-05-2016	6 **5:00 pm** City Council Office Hour **6:30 pm** City Council Meeting	7 **10:30 am** Health/Human Services Committee Meeting - Canceled **6:30 pm** Parks and Recreation Commission Meeting - Canceled	8 **7:00 pm** Tagore Commemorativ Event	9 **10:00 am** Blood Drive	10
11	12	13 **5:00 pm** City Council/Plannir Commission Joint Meeting	14 **9:30 am** Transportation Committee Meeting	15 **6:30 pm** Planning Commission Meeting	16	17
18	19	20 **6:30 pm** City Council Meeting - Canceled	21	22	23	24
25	26 **12:00 am** Christmas Day - City offices closed	27	28	29	30	31

Sun	Mon	Tue	Wed	Thu	Fri	Sat
1	2	3 **6:30 am** City Council Meeting **5:00 pm** Council Office Hour	4	5 **9:00 am** Finance Committee	6 **9:30 am** Transportation Committee Meeting	7

January 2017

Sun	Mon	Tue	Wed	Thu	Fri	Sat
1	2	3 **6:30 am** City Council Meeting **5:00 pm** Council Office Hour	4	5 **9:00 am** Finance Committee	6 **9:30 am** Transportation Committee Meeting	7
8	9	10 **6:30 pm** City Council Study Session	11	12	13 **8:30 am** Art Exhibit	14
15	16	17 **6:30 pm** City Council Meeting **6:30 pm** City Council Regular Meeting	18 **9:30 am** Transportation Committee Meeting **6:00 pm** Sammamish Youth Board	19	20	21
22	23	24	25	26	27	28
29	30	31	1	2	3 **9:30 am** Transportation Committee Meeting	4
5	6	7	8	9	10	11

City of Sammamish Washington

MEMORANDUM

TO: Melonie Anderson/City Clerk

FROM: Marlene/Finance Department

DATE: December 1, 2016, 2016

RE: Claims for December 6, 2016

$	12,974.18
	77,436.01
	273,635.32
	16,032.42
	15,967.68
	1,214,363.25
	260,903.05

Top 10 Over $10,000 Payments

KBA	19,647,95	Pavement Program Overlay - October 2016
King County Sheriff	$531,196.67	Police Services - October 2016
Watson Asphalt	$137,298.74	2016 Pavement Program - Overlays
King County Finance	$78,017.06	Traffic Mgmt & Neighborhood CIPP - October 2016
King County Water & Land	$61,268.91	Debt Service & Interlocal
Lochner	$57,097.64	SE Iss/Fall City Rd Project
Kenyon Disend	$56,506.35	Attorney Services - October 2016
Badgley Landscape	$48,629.66	Parks & ROW Landscape October & November
David Evans & Assoc.	$45,787.25	212th/228th & IPLR/Trans Concurrency Mgmt
Perteet	$44,279.06	Sahalee Way Improvements - September 2016

TOTAL $ 1,871,311.91

Check #45929- # 46091

12,974.18 +
77,436.01 +
273,635.32 +
16,032.42 +
15,967.68 +
1,214,363.25 +
260,903.05 +
1,871,311.91G+

Bill # 1

Accounts Payable

Check Register Totals Only

User: mdunham
Printed: 11/10/2016 - 10:00 AM

Check	Date	Vendor No	Vendor Name	Amount	Voucher
45929	11/10/2016	HIGASHYA	George Higashiyama	125.00	45,929
45930	11/10/2016	PSE	Puget Sound Energy	7,849.18	45,930
45931	11/10/2016	SAMCHAMB	Sammamish Chamber of Commerce	5,000.00	45,931
			Check Total:	12,974.18	

Bill # 1

Accounts Payable

Check Register Totals Only

User: mdunham
Printed: 11/10/2016 - 2:50 PM

City of Sammamish Washington

Check	Date	Vendor No	Vendor Name	Amount	Voucher
45932	11/15/2016	HARTFORD	Hartford Fire Insurance Co	100,489.92	45,932
			Check Total:	100,489.92	

ADD check #
next time
But not
$ Amt

Bill # 1

Accounts Payable

Check Register Totals Only

User: mdunham
Printed: 11/16/2016 - 2:48 PM

Check	Date	Vendor No	Vendor Name	Amount	Voucher
45933	11/17/2016	CENTURY	Century Link	52.73	45,933
45934	11/17/2016	ICMA401	ICMA 401	45,396.75	45,934
45935	11/17/2016	ICMA457	ICMA457	15,095.21	45,935
45936	11/17/2016	IDHW	Idaho Child Support Receipting	200.00	45,936
45937	11/17/2016	NAVIA	Navia Benefits Solution	1,447.44	45,937
45938	11/17/2016	NESAM	NE Sammamish Sewer & Water	515.64	45,938
45939	11/17/2016	PSE	Puget Sound Energy	13,897.67	45,939
45940	11/17/2016	WASUPPOR	Wa State Support Registry	830.57	45,940
			Check Total:	77,436.01	

Bill # 1

Accounts Payable

Check Register Totals Only

User: mdunham
Printed: 11/16/2016 - 4:10 PM

Check	Date	Vendor No	Vendor Name	Amount	Voucher
45941	11/17/2016	MARSHBAN	Marshbank Construction	273,635.32	45,941
			Check Total:	273,635.32	

Bill # 1

Accounts Payable

Check Register Totals Only

User: MDunham
Printed: 11/23/2016 - 9:04 AM

Check	Date	Vendor No	Vendor Name	Amount	Voucher
45942	11/23/2016	PSE	Puget Sound Energy	13,051.93	45,942
45943	11/23/2016	SAM	Sammamish Plateau Water Sewer	2,980.49	45,943
			Check Total:	16,032.42	

Bill # 1

Accounts Payable

Check Register Totals Only

User: mdunham
Printed: 11/28/2016 - 11:20 AM

Check	Date	Vendor No	Vendor Name	Amount	Voucher
45944	11/28/2016	US BANK	U. S. Bank Corp Payment System	15,967.68	45,944
			Check Total:	15,967.68	

Bill # 1

Accounts Payable

Check Register Totals Only

User: mdunham
Printed: 11/29/2016 - 11:38 AM

City of Sammamish Washington

Check	Date	Vendor No	Vendor Name	Amount	Voucher
45945 - VOID					
45946	12/06/2016	48NORTH	48 North Solutions, Inc	3,956.00	45,946
45947	12/06/2016	AFM	American Forest Mgmt, Inc.	1,733.00	45,947
45948	12/06/2016	AGENTERP	AG Enterprise Supply Inc	1,435.59	45,948
45949	12/06/2016	ANTIN	Aaron Antin	34.56	45,949
45950	12/06/2016	BACKGROU	Background Source Intl	197.00	45,950
45951	12/06/2016	BADGLEY	Badgley Landscape LLC	48,629.66	45,951
45952	12/06/2016	BELLCITY	City Of Bellevue	10,000.00	45,952
45953	12/06/2016	BEST	Best Parking Lot Cleaning, Inc	28,800.91	45,953
45954	12/06/2016	BLACKBUR	Kimberly Blackburn	300.00	45,954
45955	12/06/2016	BLACKLIO	Black Lion Heating & AC	93.00	45,955
45956	12/06/2016	BLUETARP	Blue Tarp Financial	248.15	45,956
45957	12/06/2016	BPWBUILD	BPW Builders, LLC	4,857.50	45,957
45958	12/06/2016	CDW	CDW Govt Inc	1,972.01	45,958
45959	12/06/2016	COMCAST2	Comcast	9.44	45,959
45960	12/06/2016	CRABTREE	Crabtree & Company	21,667.00	45,960
45961	12/06/2016	DAY	Day Wireless Systems	459.90	45,961
45962	12/06/2016	DEEREGVT	John Deere Govt & National Sales	16,585.24	45,962
45963	12/06/2016	DICKIN	Jeff Dickinson	110.20	45,963
45964	12/06/2016	ELECTRIC	Electric Lightwave	1,862.53	45,964
45965	12/06/2016	EVERGR	Evergreen Print Solutions	562.46	45,965
45966	12/06/2016	FASTENAL	Fastenal Industrial Supplies	931.95	45,966
45967	12/06/2016	FASTWH	Fast Water Heater Co	81.00	45,967
45968	12/06/2016	FIREPROT	Fire Protection, Inc.	2,415.58	45,968
45969	12/06/2016	FRANCO2	USPS CMRS-FP	2,500.00	45,969
45970	12/06/2016	GENERATO	Generator Services NW	1,578.19	45,970
45971	12/06/2016	GEREND	Donald Gerend	503.17	45,971
45972	12/06/2016	GOODSON	David M. Goodson	900.00	45,972
45973	12/06/2016	GRAINGER	Grainger	977.06	45,973
45974	12/06/2016	GRANGE	Grange Supply, Inc.	713.24	45,974
45975	12/06/2016	HANDLOS	Lynne Handlos	64.80	45,975
45976	12/06/2016	HDR	HDR Engineering, Inc	34,145.83	45,976
45977	12/06/2016	HDSUPPLY	HD Supply Waterworks	2,839.93	45,977
45978	12/06/2016	HERMANSO	Hermanson Co LLP	4,113.13	45,978
45979	12/06/2016	HOMEDE	Home Depot	3,559.77	45,979
45980	12/06/2016	HONDAKU	Issaquah Honda Kubota	332.95	45,980
45981	12/06/2016	HONEY	Honey Bucket	3,027.50	45,981
45982	12/06/2016	HOWARD	Lyman Howard	34.36	45,982
45983	12/06/2016	ISSAQ1	Issaquah Press, Inc.	700.00	45,983
45984	12/06/2016	ISSCITY	City Of Issaquah	2,173.50	45,984
45985	12/06/2016	JCWILDLI	JC Wildlife Consultant	1,750.00	45,985
45986	12/06/2016	JIRSA	Barbara Jirsa	385.02	45,986
45987	12/06/2016	KBA	KBA Inc	19,647.95	45,987
45988	12/06/2016	KCBLANK	King County Finance	4,094.98	45,988
45989	12/06/2016	KCRADIO	King Cty Radio Comm Svcs	972.36	45,989
45990	12/06/2016	KENYON2	Kenyon Disend PLLC	56,506.35	45,990
45991	12/06/2016	KIMSEY	Sarah Hawes Kimsey	2,617.76	45,991
45992	12/06/2016	KINGFI	King County Finance A/R	3,968.56	45,992
45993	12/06/2016	KINGREC	King County Recorder	1,000.00	45,993
45994	12/06/2016	KINGSH	King County Sheriff's Office	531,196.67	45,994
45995	12/06/2016	KUSTOM	Kustom Signals, Inc.	704.50	45,995

Bill # 1

Check	Date	Vendor No	Vendor Name	Amount	Voucher
45996	12/06/2016	LARSONBE	Ben Larson	118.25	45,996
45997	12/06/2016	LESSCHWA	Les Schwab Tire Center	3,379.44	45,997
45998	12/06/2016	LOCHNER	Lochner, Inc.	57,097.64	45,998
45999	12/06/2016	LUNDE	Devany Lunde	40.18	45,999
46000	12/06/2016	MINUTE	Minuteman Press	27.38	46,000
46001	12/06/2016	MOBERLY	Lynn Moberly	12,800.00	46,001
46002	12/06/2016	NAPA	NAPA Auto Parts	322.05	46,002
46003	12/06/2016	NC MACH	NC Machinery Co	3,150.32	46,003
46004	12/06/2016	NRC	National Research Center, Inc	4,410.00	46,004
46005	12/06/2016	NUVELOCI	Nuvelocity	2,568.75	46,005
46006	12/06/2016	OSBORN	Osborn Consulting, Inc	4,040.00	46,006
46007	12/06/2016	PACAIR	Pacific Air Control, Inc	13,625.68	46,007
46008	12/06/2016	PACPLANT	Pacific Plants	7,779.72	46,008
46009	12/06/2016	PACSOIL	Pacific Topsoils, Inc	167.54	46,009
46010	12/06/2016	PAPE	Pape Machinery	1,379.70	46,010
46011	12/06/2016	PERTEET	Perteet, Inc.	39,586.72	46,011
46012	12/06/2016	PLANTSCA	Plantscapes, Inc	18,845.11	46,012
46013	12/06/2016	PLATT	Platt Electric Supply	379.21	46,013
46014	12/06/2016	POA	Pacific Office Automation	4,411.20	46,014
46015	12/06/2016	PRECCON	Precision Concrete Cutting	88.42	46,015
46016	12/06/2016	RICH	Rich Landscapiing, Inc.	5,246.87	46,016
46017	12/06/2016	SECUREAS	Secure A Site, Inc	94.61	46,017
46018	12/06/2016	SHERWIN	Sherwin-Williams Company	137.96	46,018
46019	12/06/2016	SITEONE	Site One Landscape Supply LLC	915.31	46,019
46020	12/06/2016	SMYTH	Chuck Smyth	945.50	46,020
46021	12/06/2016	STANTEC	Stantec Consulting Services	568.75	46,021
46022	12/06/2016	SUNBELT	Sunbelt Rentals	1,252.17	46,022
46023	12/06/2016	SWIFTTRE	Swift Tree Care	9,855.00	46,023
46024	12/06/2016	ULINE	ULINE Shipping Supplies	1,186.99	46,024
46025	12/06/2016	ULTRA	UltraBac Software	1,024.92	46,025
46026	12/06/2016	UNITRENT	United Rentals NA, Inc	3,796.36	46,026
46027	12/06/2016	USBANKNA	US Bank N.A.	49.00	46,027
46028	12/06/2016	USTREASU	United States Treasury	1,157.06	46,028
46029	12/06/2016	WATERSH	The Watershed Company	2,653.88	46,029
46030	12/06/2016	WATSON	Watson Asphalt Paving Co	137,298.74	46,030
46031	12/06/2016	WC3	West Coast Code Consultants, Inc	11,045.10	46,031
46032	12/06/2016	WESSPUR	WesSpur Tree Equipment, Inc.	33.19	46,032
46033	12/06/2016	WESTERNE	Western Entrance Tech LLC	28,929.90	46,033
46034	12/06/2016	WINDWARD	Windward Environmental LLC	3,227.95	46,034
46035	12/06/2016	WORKSAFE	A Work Safe Service, Inc	52.00	46,035
46036	12/06/2016	WSDA	Wa State Dept of Agriculture	231.00	46,036
46068	12/06/2016	ZUMAR	Zumar Industries, Inc.	2,493.42	46,068
			Check Total:	1,214,363.25	

46037-46067- VOID

Bill # 1

Accounts Payable

Check Register Totals Only

User: mdunham
Printed: 12/1/2016 - 9:10 AM

City of Sammamish Washington

Check	Date	Vendor No	Vendor Name	Amount	Voucher
46069	12/06/2016	EVANS	David Evans & Associates, Inc	45,787.25	46,069
46070	12/06/2016	GOLDER	Golder Associates, Inc.	6,642.96	46,070
46071	12/06/2016	GOODDAVI	David Goodman	55.07	46,071
46072	12/06/2016	GREATAME	Great America Financial Services	130.31	46,072
46073	12/06/2016	HAYWOOD	Alan Haywood	900.00	46,073
46074	12/06/2016	HOGAN	D. A. Hogan & Assoc., Inc	1,450.00	46,074
46075	12/06/2016	HONEY	Honey Bucket	410.00	46,075
46076	12/06/2016	ISSAQ1	Issaquah Press, Inc.	405.00	46,076
46077	12/06/2016	KINGFI	King County Finance A/R	78,017.06	46,077
46078	12/06/2016	KINGWAT	King County Finance	61,268.91	46,078
46079	12/06/2016	KLEINFEL	Kleinfelder, Inc.	3,072.10	46,079
46080	12/06/2016	KUMAR	Kevitha Kumar	76.13	46,080
46081	12/06/2016	LESSCHWA	Les Schwab Tire Center	923.76	46,081
46082	12/06/2016	LUNDE	Devany Lunde	30.60	46,082
46083	12/06/2016	MAILPO	Mail Post	608.40	46,083
46084	12/06/2016	ONSITEFI	On Site Fitness, LLC	246.38	46,084
46085	12/06/2016	OTAK	Otak	3,841.26	46,085
46086	12/06/2016	PERTEET	Perteet, Inc.	44,279.06	46,086
46087	12/06/2016	PIEDMONT	Piedmont Directional Signs	350.00	46,087
46088	12/06/2016	SAM	Sammamish Plateau Water Sewer	1,092.86	46,088
46089	12/06/2016	SHANNONW	Shannon & Wilson Inc	6,518.44	46,089
46090	12/06/2016	TREESOLU	Tree Solutions Inc	497.50	46,090
46091	12/06/2016	WATRAILS	Wa Trails Assoc	4,300.00	46,091
			Check Total:	260,903.05	

City Council Agenda Bill

Meeting Date: **December 6, 2016** Date Submitted: 11/30/2016

Originating Department: Public Works

Clearances:

- ☑ Attorney
- ☐ Admin Services
- ☑ City Manager
- ☐ Community Development
- ☐ Finance & IT
- ☐ Parks & Recreation
- ☐ Public Safety
- ☑ Public Works

Subject: 2016 Storm and Surface Water Management Comprehensive Plan

Action Required: Approve the Ordinance adopting the 2016 Storm and Surface Water Management Comprehensive Plan

Exhibits:
1. Storm and Surface Water Management Comprehensive Plan Ordinance
2. Storm and Surface Water Management Comprehensive Plan

Budget: N/A

Summary

The last Stormwater Management Comprehensive Plan was adopted in 2001. The plan was renamed to the Storm and Surface Water Management Comprehensive Plan, which the Planning Commission transmitted to the City Council on September 6, 2016, and unanimously recommended for adoption. The Council opened the Public Hearing on November 1, 2016, with the first reading of the Ordinance.

Background

The proposed amendment updates and expands the adopted 2001 Stormwater Management Comprehensive Plan, which described the historical stormwater infrastructure and conditions inherited by the City of Sammamish following incorporation. The draft 2016 plan explains the current natural resources and stormwater infrastructure conditions, programs and projects, and describes the City's stormwater management and financial rate structure, and work elements.

The Planning Commission discussed the draft Plan with City staff and the public during its meetings on April 7, May 5, May 19, and June 2. An open house was held on July 27, 2016, at which approximately 30 members of the public attended. The Planning Commission opened a Public Hearing on May 19, 2016, and closed it on June 2, 2016.

Staff held a work session with the City Council on September 13, 2016, where responses to all questions and comments from the public and Council received to date were addressed. Council raised a number of questions and concerns about storm and surface water quality monitoring so staff

returned on October 18, 2016, to give a presentation on the City's current monitoring efforts. Staff made recommendations to include development of a water quality monitoring plan action item in the 2016 Plan which the Council accepted.

The Council opened the Public Hearing and first reading on November 1, 2016.

Financial Impact
N/A

Recommended Action
Motion to approve the Ordinance adopting the 2016 Storm and Surface Water Management Comprehensive Plan on December 6, 2016.

Exhibit 1

CITY OF SAMMAMISH
WASHINGTON

ORDINANCE NO. O2016 - ____

AN ORDINANCE OF THE CITY OF SAMMAMISH, WASHINGTON, UPDATING THE SAMMAMISH STORMWATER COMPREHENSIVE PLAN; PROVIDING FOR SEVERABILITY; AND ESTABLISHING AN EFFECTIVE DATE

WHEREAS, the Sammamish City Council initially adopted the City's Stormwater Management Comprehensive Plan on May 2, 2001; and

WHEREAS, the City conducted a public process to review its stormwater comprehensive plan, and on April 4, 2012, approved a scope of work for amendments, including revisions needed to ensure compliance with its stormwater permit and Chapter 36.70A RCW (the "Stormwater Plan Update"); and

WHEREAS, the public process for the Stormwater Plan Update has provided for early and continuous public participation opportunities, including inviting public comment on the City's website since July 2016; and at a public open house on July 27, 2016; and

WHEREAS, the Planning Commission also considered the proposed amendments at open public meetings on May 5, 2016, May 19, 2016, and June 2, 2016; and

WHEREAS, on June 2, 2016, the Planning Commission considered the public comments received and other information presented at various public meetings and voted to recommend adoption of an amended plan, entitled "Storm and Surface Water Management Comprehensive Plan" to the City Council; and

WHEREAS, on October 19, 2016, a copy of the Storm and Surface Water Management Comprehensive Plan was transmitted to the Washington State Department of Commerce ("Commerce") in accordance with RCW 36.70A.106, and Commerce granted expedited review on November 7, 2016; and

WHEREAS, on November 9, 2016, a Determination of Non Significance was issued for the Storm and Surface Water Management Comprehensive Plan in accordance with Chapter 43.21C RCW, the State Environmental Policy Act, and sent to state agencies and interested parties; and

WHEREAS, the City Council considered the Storm and Surface Water Management Comprehensive Plan at regular meetings thereof on September 6, 2016, September 13, 2016, and

October 18, 2016, and held public hearings on the Storm and Surface Water Management Comprehensive Plan on November 1, 2016, and December 6, 2016; and

WHEREAS, the City Council has considered the goals of the Growth Management Act as set forth in RCW 36.70A.020 and determined that the Storm and Surface Water Management Comprehensive Plan amendments attached hereto reflect the City's balancing of the public interests under the planning goals of the GMA and complies with the requirements of the City's municipal stormwater permit;

NOW, THEREFORE, THE CITY COUNCIL OF THE CITY OF SAMMAMISH, WASHINGTON, DO ORDAIN AS FOLLOWS:

Section 1. Stormwater Comprehensive Plan, Amended. The Sammamish Stormwater Comprehensive Plan is hereby retitled the "Storm and Surface Water Management Comprehensive Plan" and otherwise amended to read as set forth in **Attachment A**, which is incorporated herein by this reference.

Section 2. Authority to Make Minor Corrections. Consistent with RCW 35A.21.010, the Storm and Surface Water Management Comprehensive Plan may be modified by the City Manager in the form of minor and non-substantive grammatical and punctuation edits prior to filing of this Ordinance with the Washington State Department of Commerce.

Section 3. Severability. Should any section, paragraph, sentence, clause or phrase of this Ordinance, or its application to any person or circumstance, be declared unconstitutional or otherwise invalid for any reason, or should any portion of this Ordinance be pre-empted by state or federal law or regulation, such decision or pre-emption shall not affect the validity of the remaining portions of this Ordinance or its application to other persons or circumstances.

Section 4. Effective Date. This Ordinance shall be published in the official newspaper of the City, and shall take effect and be in full force five (5) days after the date of publication.

ADOPTED BY THE CITY COUNCIL AT A REGULAR MEETING THEREOF ON THE _____ DAY OF DECEMBER 2016.

CITY OF SAMMAMISH

_____

Donald J. Gerend, Mayor

ATTEST/AUTHENTICATED:

Exhibit 1

_____
Melonie Anderson, City Clerk

Approved as to form:

_____
Michael R. Kenyon, City Attorney

Filed with the City Clerk:	
Public Hearing:	November 1, 2016
First Reading:	November 1, 2016
Second Reading:	November 15, 2016
Third Reading:	December 6, 2016
Passed by City Council:	
Date of Publication:	
Effective Date:	

Exhibit 1

ATTACHMENT A:

Sammamish Storm and Surface Water Management Plan

Exhibit 2

STORM and SURFACE WATER MANAGEMENT COMPREHENSIVE PLAN

DECEMBER 2016

City of Sammamish Washington

EXECUTIVE SUMMARY

What is the Storm and Surface Water Management Comprehensive Plan?

The Storm and Surface Water Management Comprehensive Plan is a functional document that provides direction for management of the City's surface and stormwater system to benefit the community and meet the City's overriding goal of health and sustainability.

The Plan provides information about the City's existing physical stormwater system, current operations and maintenance, staffing, funding, regulatory obligations, and policies. Current and potential future issues are discussed along with recommendations for actions that address policies and meet desired levels of service.

Why Plan Now?

The City's last Plan was completed in 2001. Since then, the City has almost doubled in size. Stormwater infrastructure inherited from King County during initial annexation in 1999 is aging and regulatory requirements under the National Pollutant Discharge Elimination System (NPDES) Phase II permit are necessitating more action by the City. Maintaining existing infrastructure, keeping pace with new development, and complying with stormwater regulations requires planning to ensure that resources are allocated and needs are met.

What does Stormwater Management Involve?

- 40 inches of rain per year
- 185 miles of stormwater pipes
- 5 kokanee spawning streams
- $4.1M operating budget
- >400 publicly-owned stormwater facilities
- $4.04M Capital Improvement Budget
- Population ~60,000
- 30 miles of streams
- 5 large lakes
- >800 acres of wetlands
- >100 customer inquiries
- 102 private stormwater facilities
- 1 NPDES Phase II Permit
- 14 sub-basins

EXECUTIVE SUMMARY

What are the City's stormwater program goals?

The City currently provides a basic level of stormwater service that meets NPDES Phase II Permit requirements and addresses other established City goals and objectives necessary to maintain the public stormwater infrastructure, promote public health, safety, and welfare by reducing negative stormwater impacts, and comply with relevant regulations.

It is the City's goal to provide an enhanced stormwater level of service that targets problems and takes advantage of opportunities that further reduce stormwater-related impacts to property, and the environment for the well-being of the residents of Sammamish.

What are the stormwater problems?

The stormwater problems in Sammamish are typical of those of other jurisdictions in the region, including:

- Resources to maintain existing systems (e.g., ditches)
- Lack of stormwater conveyance or treatment in some areas of the City (e.g., need to retrofit)
- Beaver activity
- Lack of maintenance on private stormwater facilities (e.g., need for better enforcement)
- Aesthetically unpleasing stormwater facilities (e.g., need to improve appearance and work with community)
- Groundwater seepage
- Aging infrastructure (e.g., condition and planning for repair and replacement)

EXECUTIVE SUMMARY

What are the recommended actions?

Recommended actions include one-time and annual projects that address stormwater problems. These actions include those that are (1) required by the NPDES Phase II Permit (e.g., adoption of a new Surface Water Design Manual), (2) clarify or develop policies and strategies (e.g., code enforcement, beaver management), (3) fund opportunities (e.g., property acquisition, water quality treatment), (4) plan for repair and replacement of assets (e.g., basin planning, stormwater asset management), and (5) continue and enhance education and outreach (e.g. education and outreach program, development of LID outreach materials). Capital projects that address site-specific issues, such as flooding or necessary repairs are included in the City's six-year Stormwater CIP.

Where does the money come from?

The City's storm and surface water capital improvement projects and operational activities are primarily funded through the Stormwater Utility. The revenue sources are based on the extent of property characteristics that contribute to the quantity and quality of stormwater runoff. The Utility consists of the Surface Water Management Fund, which covers operational programs and services, and the Surface Water Capital Improvement Program Fund.

GLOSSARY OF TERMS AND ACRONYMS

AKART

All Known Available and Reasonable Technology

Basin

Any area draining to a point of interest and generally containing a water body or stream system, such as Ebright Creek, Laughing Jacobs Creek, or Pine Lake Creek. Basins of interest to City of Sammamish are those that drain to Lake Sammamish, Evans Creek to the North, Issaquah Creek to the South, or drainage areas which drain east to the Snoqualmie Valley.

Basin plan

A plan and all implementing regulations and procedures including but not limited to capital projects, public education activities, land use management regulations adopted by ordinance for managing surface and stormwater management facilities, and features within individual subbasins.

B-IBI

Benthic Index of Biologic Integrity. Index of stream health and water quality based on collection and analysis of aquatic insects.

BMP

Best Management Practice. Includes structural and non-structural approaches for managing surface and stormwater runoff and pollutants.

Conveyance System

Drainage facilities and features that collect, contain, and provide for the flow of surface and storm water from the highest points on the land down to a receiving water. Conveyance systems are made up of natural elements and of constructed facilities.

GLOSSARY OF TERMS AND ACRONYMS

Culvert

Pipe or concrete box structure which drains open channels, swales, or ditches under a roadway or embankment typically with no catch basins or manholes along its length.

CARA

Critical Aquifer Recharge Area

CCTV

Closed Circuit Television

CIP

Capital Improvement Program

CMP

Corrugated Metal Pipe. Material commonly used for stormwater pipes.

CSGP

Construction Stormwater General Permit. NPDES permit required for developments to discharge site stormwater during construction.

CWA

Clean Water Act. The federal environmental law that includes the management of stormwater.

Detention facility

A facility that collects water from developed areas and releases it at a slower rate than it enters the collection system. The excess of inflow over outflow is temporarily stored in a pond or a vault and is typically released over a few hours or a few days.

Discharge

Runoff, excluding offsite flows, leaving the proposed development through overland flow, built conveyance systems, or infiltration facilities.

GLOSSARY OF TERMS AND ACRONYMS

Ditch

A constructed channel with its top width less than 10 feet at design flow.

Drainage

The collection, conveyance, containment, and/or discharge of surface and stormwater runoff.

DMR

Discharge Monitoring Report. Reporting required for NPDES Construction Stormwater General Permit and other NPDES permits.

DNR

Department of Natural Resources (Washington)

ESA

Endangered Species Act

Erosion

The detachment and transport of soil or rock fragments by water, wind, ice, etc.

Flow control facility

A drainage facility designed to mitigate the impacts of increased surface and stormwater runoff generated by site development pursuant to the drainage requirements in Sammamish Municipal Code Chapter 13. Flow control facilities are designed either to hold water for a considerable length of time and then release it by evaporation, plant transpiration, and/or infiltration into the ground, or to hold runoff a short period of time and then release it to the conveyance system.

GLOSSARY OF TERMS AND ACRONYMS

Flow control standards

Core Requirement No. 3 of the 2016 King County Surface Water Design Manual (SWDM) describes basic, conservation, and flood control flow control standards (page 1-39). The level of flow control required is based on the resource value of the receiving system in terms of its hydrology, ecology, geology and water quality.

FTE

Full-time equivalent. Term used to describe staffing levels.

Groundwater

Underground water usually found in aquifers. Groundwater usually originates from infiltration. Wells tap the groundwater for water supply uses.

GIS

Geographic Information System

GMA

Growth Management Act

Habitat

The specific area or environment in which a particular type of plant or animal lives and grows.

IDDE

Illicit Discharge Detection and Elimination

Illicit discharges

Discharges of non-stormwater to the storm drainage system. Examples are discharges from internal floor drains, appliances, industrial processes, sinks, and toilets that are connected to the nearby storm drainage system. These discharges should be going to the sanitary sewer system, a holding tank, an on-site process water treatment system, or a septic system.

GLOSSARY OF TERMS AND ACRONYMS

Impervious surface

A hard surface area which either prevents or retards the entry of water into the soil mantle as under natural conditions prior to development; and/or a hard surface area which causes water to run off the surface in greater quantities or at an increased rate of flow from the flow present under natural conditions prior to development.

Common impervious surfaces include, but are not limited to, roof tops, walkways, patios, driveways, parking lots or storage areas, concrete or asphalt paving, gravel roads, packed earthen materials, and oiled, macadam, or other surfaces which similarly impede the natural infiltration of surface and storm water runoff.

KWG

Kokanee Work Group

Lake

An area permanently inundated by water in excess of two meters (7 ft) deep.

LID

Low Impact Development

LOS

Level of Service

MS4

Municipal separate storm sewer systems.

MSL

Mean Sea Level

GLOSSARY OF TERMS AND ACRONYMS

NFIP

National Flood Insurance Program

NPDES

National Pollutant Discharge Elimination System. The part of the Clean Water Act which requires point source discharges to obtain permits. These permits, referred to as NPDES permits, are administered by the Washington State Department of Ecology.

QAPP

Quality Assurance Project Plan

Receiving waters

Bodies of water or surface water systems receiving water from upstream man-made or natural systems.

Riparian

Pertaining to the banks of rivers and streams, and sometimes also wetlands, lakes, or tidewater.

Runoff

Water originating from rainfall and other precipitation that ultimately flows into drainage facilities, rivers, streams, springs, seeps, ponds, lakes, and wetlands as well as shallow groundwater.

RCW

Revised Code of Washington

RSMP

Regional Stormwater Management Program

GLOSSARY OF TERMS AND ACRONYMS

Salmonid

A member of the fish family Salmonidae. In King County salmonid species include Chinook, Coho, chum, sockeye, and pink salmon; cutthroat, rainbow, and brown trout and steelhead; Dolly Varden, brook trout, char, kokanee, and whitefish.

Sphagnum bog wetlands

Unique wetlands having a predominance of sphagnum moss creating a substrate upon which a distinctive community of plants is established. Some of these include ledum groenlandicum (Labrador tea), Kalmia occidentalis (bog laurel), Drosera rotundifolia (sundew), and Vaccinium oxycoccos (cranberry). Stunted evergreen trees are also sometimes present. In addition to a distinctive plant community, the water chemistry of sphagnum wetlands is also unique. It is characterized by acidic waters (pH 3 to 5.5), low nutrient content, low alkalinity, and a buffering system composed predominantly of organic acids. In the Puget Sound area, mature sphagnum bog wetlands are typically very old, often dating back thousands of years.

Stormwater

Stormwater is the water that runs off surfaces such as rooftops, paved streets, highways, and parking lots. It can also come from hard grassy surfaces like lawns, play fields, and from graveled roads and parking lots.

Stormwater Management

The application of site design principles and construction techniques to control flow and prevent sediments and other pollutants from entering surface or ground water; source controls; and treatment of runoff to reduce pollution.

GLOSSARY OF TERMS AND ACRONYMS

SDC

System Development Charge

SMC

Sammamish Municipal Code

SEPA

State Environmental Policy Act

SMA

Shoreline Management Act

SWDM

Surface Water Design Manual

TESC

Temporary Erosion and Sediment Control

TMDL

Total Maximum Daily Load

WAC

Washington Administrative Code

WRIA

Water Resources Inventory Area

Wetland

An area inundated or saturated by ground or surface water at a frequency and duration sufficient to support, and that under normal circumstances do support, a prevalence of vegetation typically adapted for life in saturated soil conditions. Wetlands generally include swamps, marshes, bogs, and similar areas (U.S. Army Corps of Engineers Regulation 33 CFR 328.3 (1988)).

Glossary terms from King County (http://www.kingcounty.gov/services/environment/water-and-land/stormwater/glossary.aspx

TABLE OF CONTENTS

Section 1 Introduction……..1

Why is a Storm and Surface Water Management Comprehensive Plan Important?.....1

How is the Stormwater Program Staffed? ?.....3

What City-sponsored commissions work with stormwater staff?....4

How is the stormwater program funded?.....5

What are the City goals?.....6

Why is an updated plan needed?.....7

What has been accomplished?.....8

Section 2 Regulatory and Community Framework……...9

How does this Plan fit in with other plans and regulations?..... 9

What is the regulatory framework within Sammamish?..... 11

Section 3 Natural Resources and Existing Infrastructure……..19

How does land cover and zoning affect surface and stormwater?.....19

What are the geologic conditions in Sammamish?.....24

How do natural resources connect the City's surface and stormwater system ?.....29

What fish species do the City's water bodies support?.....36

What are the water quality conditions of the City's water bodies?.....36

What are some of the threats to natural resources?.....40

What types of stormwater infrastructure does the City own and operate?.....42

Section 4 Existing Stormwater Management Program……47

How is customer service and public involvement accomplished?....48

What types of surface water or drainage problems have been reported?.....48

TABLE OF CONTENTS, continued

How does the City comply with and implement stormwater regulations? 51

How does the City implement stormwater development review and code compliance? 52

What are the primary operations and maintenance functions? 55

What types of water quality monitoring does the City conduct? .. 59

How is stormwater education and outreach implemented? 61

Does the City coordinate with other jurisdictions on stormwater-related issues? 62

How are stormwater capital projects funded and implemented? 63

What are the stormwater staffing levels? 63

Section 5 Anticipated Future Conditions 67

Where is development occurring? 67

Is population expected to increase in Sammamish? 68

What are expected regulatory changes? 69

What about the City's stormwater infrastructure? 69

Are there new technologies, equipment, or approaches that could be employed in Sammamish? 70

How might climate change affect stormwater management in Sammamish? 71

Section 6 Goals, Objectives, and Actions 73

Section 7 Recommendations Moving Forward 83

What are levels of service? 84

What are the recommendations moving forward? 84

Where does the money come from? 100

Section 8 References 103

TABLE OF CONTENTS, continued

Appendix A Recommended Action Details

List of Tables

Table 1-1 Summary of major surface and stormwater improvements….. 8

Table 2-1 Summary of regulations……. 12

Table 3-1 Summary of land area by zoning classification……... 21

Table 3-2 Summary of parks and open space properties…… 23

Table 3-3 Lakes in Sammamish……... 30

Table 3-4 Summary of streams and pipe/open channel lengths…….. 31

Table 3-5 Summary of wetland acreage in Sammamish…….. 32

Table 3-6 Summary of stream reaches on 2012 Ecology 303(d) list and 2014 candidate listings……38

Table 3-7 Summary of noxious weed inventory in Sammamish……41

Table 4-1 Range of drainage complaints……48

Table 4-2 Surface Water Management Fund position history between 2013 and 2016……65

Table 7-1 Operations and maintenance levels of service……...85

Table 7-2 Development levels of service……...86

Table 7-3 Capital Improvement Projects programs levels of service……...87

Table 7-4 Education and outreach levels of service……...88

Table 7-5 Local and regional coordination levels of service……..89

TABLE OF CONTENTS, continued

List of Figures

Figure 1-1 Vicinity map.....2

Figure 1-2 Timeline of population growth on Sammamish Plateau, City incorporation, and stormwater-related events 3

Figure 1-3 Simplified organizational structure showing stormwater management program staff.....4

Figure 2-1 Schematic of Sammamish departmental regulatory responsibilities and surface- and stormwater-related plans 10

Figure 3-1 Sub-basins.....20

Figure 3-2 Zoning.....22

Figure 3-3 Surface geology.....25

Figure 3-4 Erosion and landslide hazards.....27

Figure 3-5 Wetlands and streams.....33

Figure 3-6 Critical aquifer recharge areas.....35

Figure 3-7 Types and numbers of stormwater treatment facilities in Sammamish and time period of installation.....43

Figure 3-8 Stormwater facilities.....44

Figure 3–9 Lengths of pipe material and decade installed.....45

Figure 3-10 Conveyance system.....46

Figure 4-1 Summary total of drainage CARs received each month between 2001 and 2015.....49

Figure 4-2 Summary of drainage CARs received between 2001 and 2015.....50

Figure 4-3 Flow control application areas.....53

Figure 4-4 Water quality application areas.....54

Figure 4-5 Surface Water Management Fund Organizational Chart.....64

This page left intentionally blank.

SECTION 1 – INTRODUCTION

Why is a Storm and Surface Water Management Comprehensive Plan important?

The City of Sammamish (City) is a desirable suburban community located on the outskirts of the Seattle and Bellevue metropolitan areas (Figure 1-1). The rapid growth that occurred on the Sammamish Plateau in the 1980s and 1990s (Figure 1-2), and that continues today, contributes to changes in hydrologic characteristics that can lead to surface and stormwater impacts.

Bird's eye view of Lake Sammamish

Shortly after incorporation in 1999, the City formed a surface water management program to ensure a stable source of funding to provide stormwater-related services, projects, and programs that promote public health, safety, and welfare; and to protect and enhance the environment. It is intended that establishing and implementing a comprehensive stormwater management program to address common surface water-related issues such as-flooding, erosion, habitat loss, impacts to downstream property owners and water quality degradation-will allow the City to allocate its resources to address its highest priorities.

This Storm and Surface Water Management Comprehensive Plan (Plan) is a guide and a tool to be used by City staff to define capital projects, work programs, and strategies for meeting current and future surface and stormwater management needs. The City's first Plan was prepared in 2001 (CH2MHill 2001) and describes the drainage system that was largely inherited from King County and the existing issues and alternatives for meeting the immediate surface and stormwater needs at the time. This Plan update builds on information presented in the original plan, incorporating elements related to current City goals, projects, and future plans, as well as new regulatory requirements and current stormwater management techniques.

Allen Lake from 244th Avenue

The City's Community Development Department is responsible for enforcing city, state, and federal regulations that support the City's ability to manage stormwater. The Parks and Recreation Department manages the City's forested open space, and provides volunteer opportunities that help further the City's goals of environmental sustainability.

Figure 1-1 Vicinity map

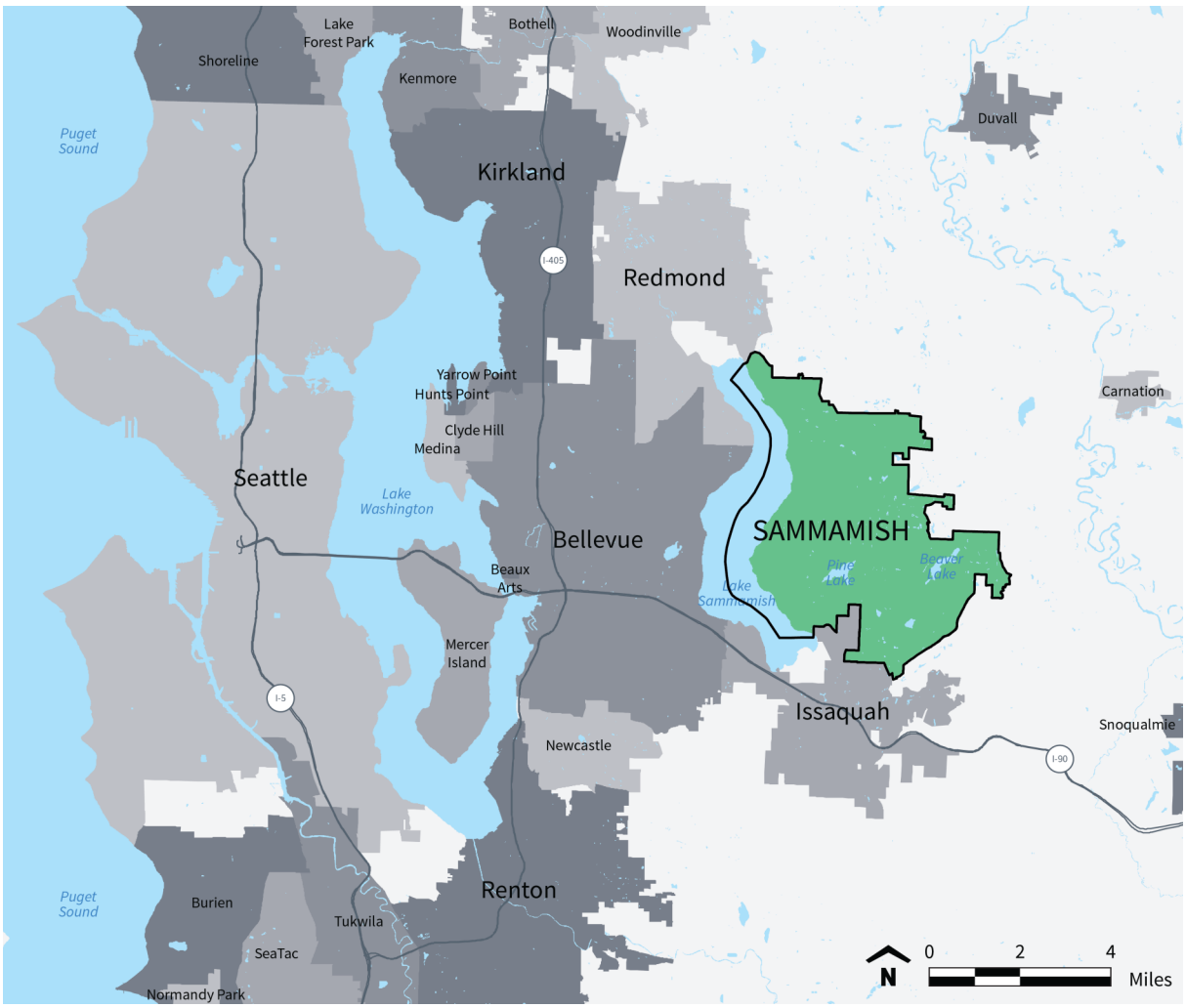

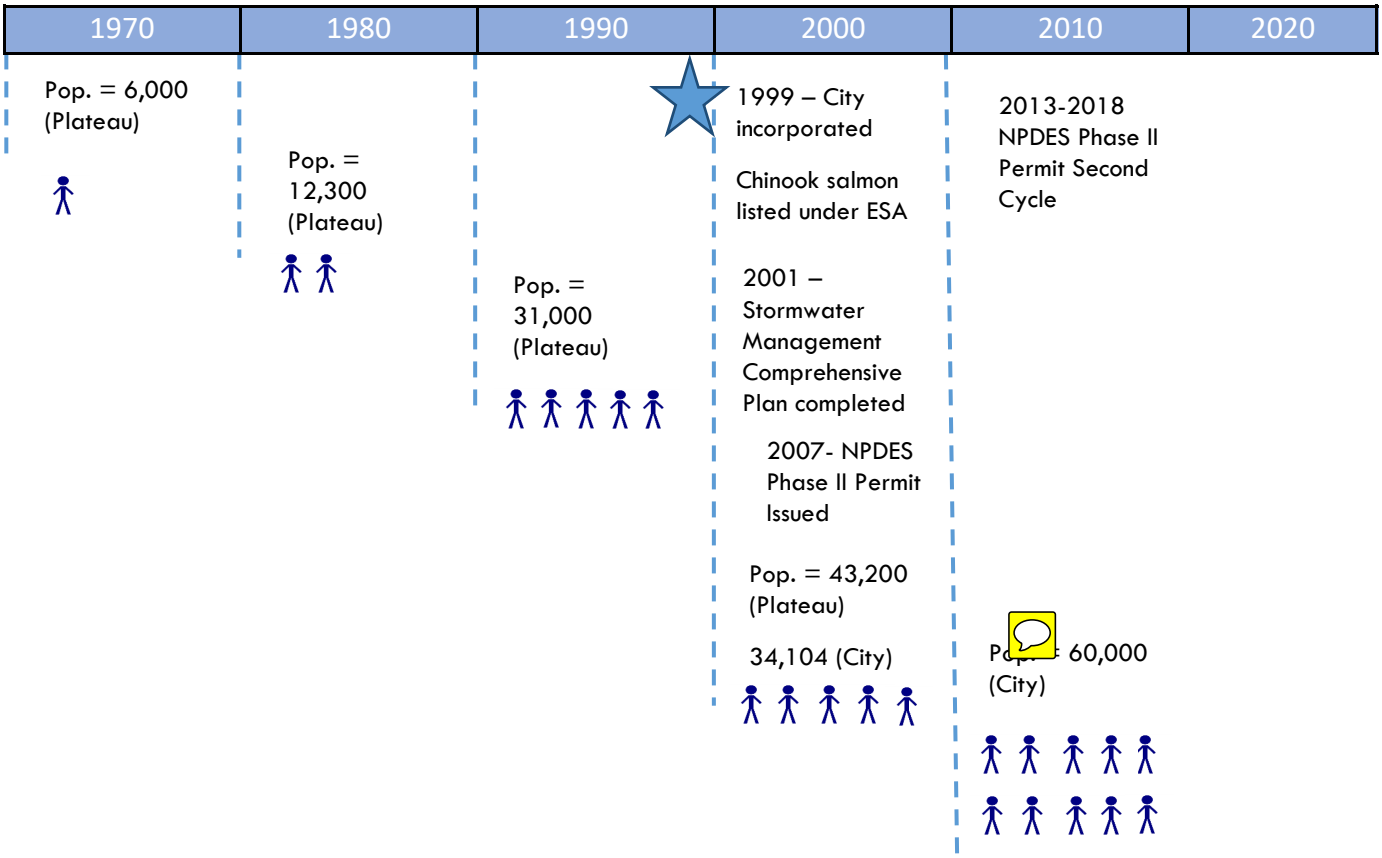

Figure 1-2 Timeline of population growth on Sammamish Plateau, City incorporation, and stormwater-related events

How is the stormwater program staffed?

The City implements the majority of the Stormwater Management Program components within the Public Works Department, which is "committed to providing quality service to the community by building, maintaining and overseeing a growing infrastructure." (City of Sammamish Public Works webpage, accessed April 16, 2016). Three permanent Public Works staff are assigned to the stormwater program, including a Senior Stormwater Program Manager, a Stormwater Technician, and a Stormwater Inspector (Figure 1-3). Additional program support is provided by Public Works' Operations and Maintenance personnel, Development Review Engineers, and Construction Inspectors. Some maintenance activities, such as mowing and vegetation control are contracted to private vendors. Interdepartmental coordination between Public Works and other City departments, such as Parks, is ongoing and important to the success of stormwater goals and initiatives.

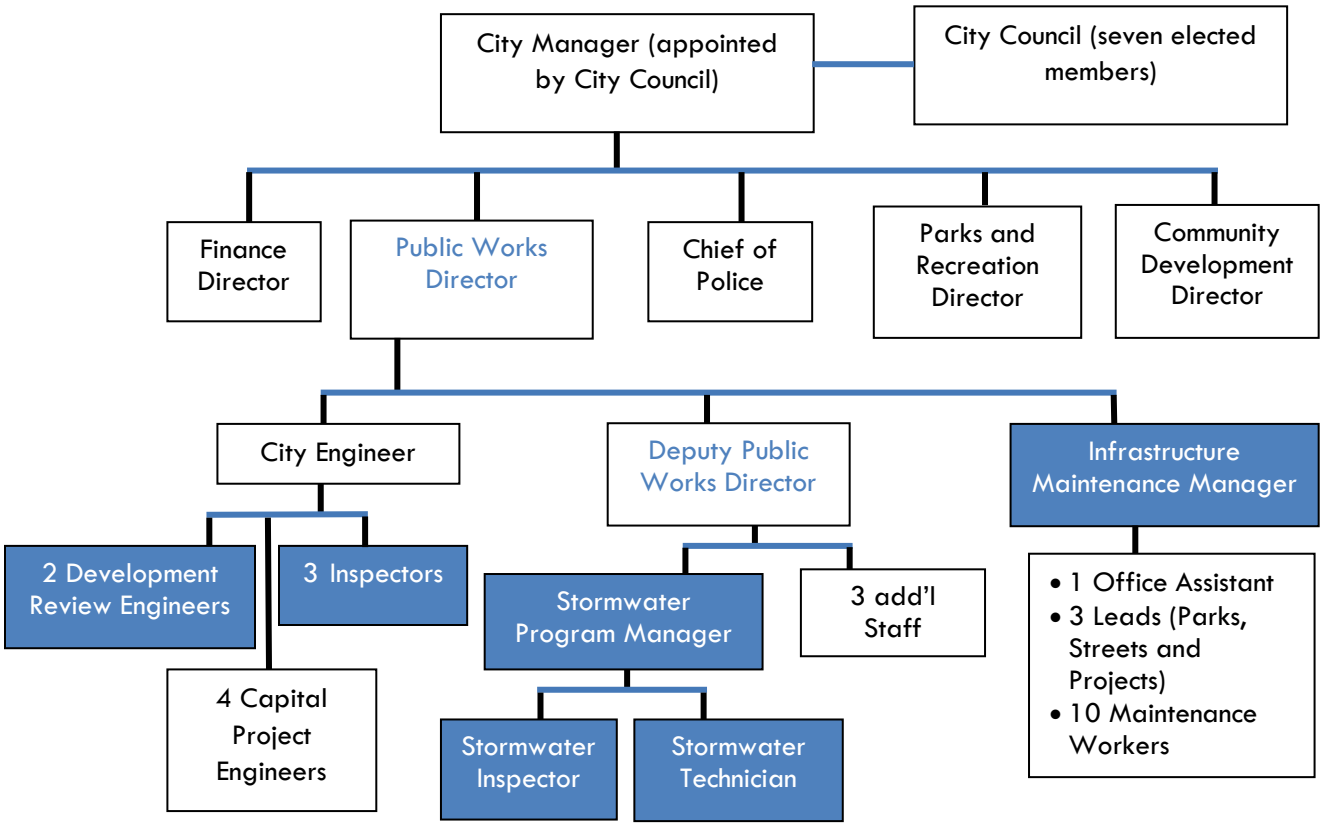

Figure 1-3 Simplified organizational structure showing stormwater management program staff

What City-sponsored commissions work with stormwater staff?

In addition to City staff in the stormwater management program and other departments that work closely with stormwater staff, there are public-oriented commissions and groups that provide input and support for surface and stormwater issues. These include:

- Beaver Lake Management District

  Mission: To track environmental conditions at Beaver Lake and to promote actions and behaviors among area residents that will minimize negative impacts on the lake and its surrounding ecosystems.

- Planning Commission

  Mission: To make planning policy recommendations to the City Council and offer advice on development regulations. The commissioners will also make recommendations on periodic adjustments to the City's comprehensive plan.

How is the stormwater program funded?

The City's Enterprise Fund consists of two funds whose revenue sources are based on property characteristics that contribute to the quantity and quality of stormwater runoff. The Surface Water Management Fund is a self-supporting fund that primarily comes from fees charged to customers and provides for the operation and maintenance of publicly-owned stormwater conveyance, detention and treatment facilities, and to meet the National Pollutant Discharge Elimination System Permit requirements.

The Surface Water Capital Improvement Program was established to finance capital projects for the surface water utility system. Revenues are derived from the system development fees, transfers from the Surface Water Management Fund, state and federal grants/loans, Real Estate Excise Taxes and contributions.

The City's Surface Water Management Fund is $3.6 million annually, and is generated by stormwater fees.

The overall goals of the City's stormwater program is to be in alignment with overall City goals, comply with state and federal regulations, and be responsive to citizen concerns.

What are the City goals?

In the City's 2015 Comprehensive Plan (City of Sammamish 2015), there are a number of elements, goals, and policies that relate to storm and surface water management. The City prioritized sustainability and health as the overriding goals in the Comprehensive Plan. It is the intent of this Plan and the City's Stormwater Management Program to be consistent with goals and policies outlined in the Comprehensive Plan.

The sustainability and health goals that relate to storm and surface water management are listed below:

- Goal EC.2 Protect people, property, and the environment in areas of natural hazards.
- Goal EC.3 Protect wetlands (including bogs) and other water resources from encroachment and degradation and encourage restoration of such resources.
- Goal EC.5 Maintain and protect surface water and groundwater resources that serve the community and enhance the quality of life.
- Goal UT.6 Encourage conservation of water and protect water quality.
- Goal CF.4 Design and locate capital facilities with features and characteristics that support the environment, energy efficiency, aesthetics, technological innovation, cost effectiveness, and sustainability.

Additionally, shoreline goals and policies that address the following topics are listed in the City's Comprehensive Plan:

- Conservation
- Shoreline Restoration and Enhancement
- Critical Areas and Environmental Protection (including erosion hazard areas and slide hazard areas)
- Flood Hazard Reduction
- Restoration and Enhancement
- Shoreline Vegetation Conservation
- Site Planning
- Water Quality
- Stormwater and Nonpoint Pollution

Program and project recommendations that support 2015 Comprehensive Plan policies for the goals listed above are noted in this Plan.

Why is an updated plan needed?

There are several reasons for updating the City's Stormwater Comprehensive Plan now. It has been more than a decade since the last plan was completed in 2001, and there have been several regulatory changes and new directions in stormwater management since then. In addition a number of new stormwater technologies: materials, operational improvements, and design approaches have been developed since 2001, and the City wants to position itself to take advantage of these changes.

In addition, the City has grown and continues to expand in both population (Figure 1-2) and area. Most recently, the City annexed the Klahanie neighborhood, adding approximately 1,200 acres to the City's geographic footprint and approximately 11,000 new residents. As the City is maturing, so is its stormwater infrastructure, much of which was constructed prior to incorporation. These are some of the challenges and opportunities that will be addressed in subsequent sections.

The City's Vision Statement (2015 Comprehensive Plan) is:

Sammamish is a vibrant bedroom community blessed with a well-preserved natural environment, a family-friendly, kid-safe culture, and unrivaled connectedness. From its expanding tree canopy, to its peaceful neighborhoods, to its multi-modal transportation resources, Sammamish captures the best of the past even as it embraces a burgeoning digital future and meets housing affordability through balanced, sustainable housing. It is a state-of-the-art community—engaged, responsive, and generous in its support for the full range of human endeavor.

What has been accomplished?

In the intervening years since completion of the last Plan in 2001, the City has accomplished a multitude of surface and storm water improvements, including those listed in Table 1-1.

Table 1-1 Summary of major surface and stormwater improvements

Category	Then (pre-2001)	Now (2016)
Personnel	No dedicated stormwater staff	3 full time stormwater staff
Aerial mapping	1996 – 1997 LandSat images	Participation in regional aerial mapping program for 5 years, including impervious surface mapping; will receive new LiDAR maps in 2016.
Stormwater system mapping	Incomplete record	Mapped more than half the system in GIS
Ownership of public stormwater facilities	Most owned and operated by King County	Ownership and maintenance responsibilities and facilities transferred to the City
Codes and ordinances	King County's Surface Water Management Code was adopted and enforced	Adoption of the City's Title 13 Surface Water Management Municipal Code, (SMC 21A.50) Critical Areas Update
Maintenance	Contracted with King County for inspection and maintenance	City staff conducts inspections and ensures maintenance of stormwater assets
Watershed planning	Reliance on 1990s-era King County basin plans	Updated 2009 Thompson and Inglewood sub-basin plans in 2011 for Town Center
Capital Improvement Projects	Stormwater projects associated with development and transportation projects	Capital projects to improve capacity, water quality, and salmon recovery
Protection of natural resources	Staff resources not available for education and outreach; salmon recovery efforts; and collaboration with City, community and regional partners to protect natural resources	Extensive public education and outreach program, including participation in regional efforts
		Land acquisitions in environmentally sensitive areas, such as the Pigott property that was gifted to the City
		Participation in regional salmon recovery efforts
		New open space parks (including Evans Creek Preserve, Sammamish Landing, and Big Rock Park) with significant natural resources established, protecting valuable resources for the future

SECTION 2– REGULATORY AND COMMUNITY FRAMEWORK

How does this Plan fit in with other plans and regulations?

The City's Stormwater Management Program is guided by the community's vision and goals and the regulatory framework imposed by federal, state, and local regulations and requirements. This section describes the input from the community in the development of this Plan, as well as the regulatory framework under which stormwater management is accomplished in Sammamish.

Plans and programs under the Departments of Community Development and Parks and Recreation complement this Plan and the stormwater management program. Figure 2-1 shows general departmental responsibilities for implementation of codes and regulations in Sammamish and the surface and stormwater-related plans.

Sammamish Town Center Plan

The Sammamish Town Center Plan, adopted 2008 (City of Sammamish 2008) and its companion City of Sammamish Town Center Draft Comprehensive Stormwater Management Plan (Parametrix 2009) provides general goals and specific approaches for how stormwater should be managed in the Town Center to protect downstream natural resources, consistent with this Plan.

Urban Forestry Plan

The City is developing an Urban Forestry Plan that will include an emphasis on tree retention that supports surface and stormwater functions, complementing and supporting the City's overall stormwater management goals.

In the development of this Plan, the following outreach events were held:

- *Planning Commission Public Hearings (April 7, May 5, and May 19, 2016)*
- *Public Open House (July 27, 2016)*
- *City Council Meetings (September—October 2016)*

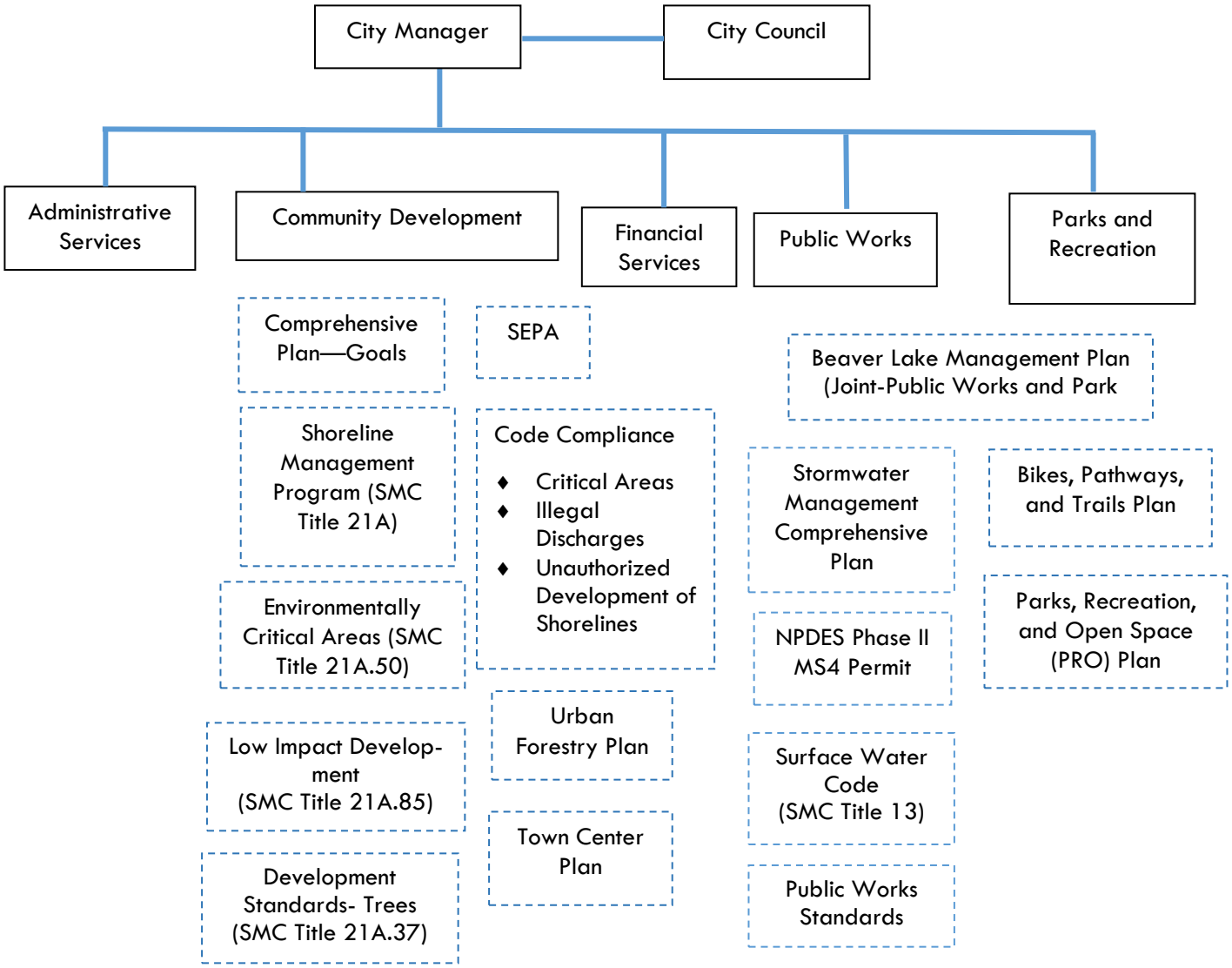

Figure 2-1 Schematic of Sammamish departmental regulatory responsibilities and surface- and stormwater-related plans

Other Plans

The Bikes, Paths and Trailways Plan and the Parks, Recreation, and Open Space (PRO) Plan also involve surface and stormwater management in the development, maintenance and management of trails and paths and park resources. Both Plans have shared goals of environmental stewardship of surface water resources, consistent with this Plan.

What is the regulatory framework within Sammamish?

Sammamish must comply with a variety of federal, state, and municipal laws and regulations in the management of surface and stormwater. The intent of these regulations is to protect the public, natural resources, downstream property owners, and infrastructure from direct and indirect stormwater impacts, including flooding, pollution, erosion, and landslides.

Many of the City's codes and municipal requirements are the result of state and federal conditions for compliance with broader state and federal laws. Table 2-1 summarizes applicable regulations and permits that relate to surface and stormwater management, and their relevance to Sammamish. Recent revisions or planned future changes to permits or regulations are highlighted in bold with key provisions summarized in Table 2-1.

Table 2-1 Summary of regulations

Regulation	Program	Intent	Relevance to Sammamish
Federal regulations and tribal agreements			
Clean Water Act (CWA)	National Pollutant Discharge Elimination System (NPDES) Phase II Municipal Separate Stormwater Sewer Systems Permit (MS4)	Eliminate discharge of pollutants to nation's water, and achieve water quality that supports beneficial uses (fishable and swimmable).	NPDES permit delegates to Sammamish the responsibility for quality of water leaving the City's system. **A new NPDES permit became effective August 1, 2013, with new requirements that will be phased in over the 5-year permit window.**
	Other NPDES Permits (Industrial, Sand and Gravel, Boatyard, Construction, etc.)		Requires entities in Sammamish that conduct certain pollutant-generating activities, such as land clearing, to obtain a permit to discharge and to implement a plan to minimize discharge of pollutants, such as Phosphorus, to Sammamish receiving waters.
	Water quality standards (303 (d) list)	Describe status of water quality in state's water bodies.	Requires development of a Total Maximum Daily Load (TMDL) for each pollutant documented to be in water bodies at levels greater than the water quality standards. Sammamish has several streams and lakes on the state's 303(d) list that may require a TMDL.
	Sections 401 and 404	Protect water resources from alterations that could occur with dredging and/or filling in or adjacent to water bodies.	Requires a permit for activities that discharge or dredge fill material to or from waters of the United States.
Tribal Agreements and Related Case Law	"Culvert Case"- June 27, 2016 US District Court ruled for the third time hat the State of Washington must replace culverts that impede the passage of fish to their spawning grounds	Protect fish popula-tions in traditional fishing grounds of Indian Tribes.	Muckleshoot Indian Tribes are party to State Environmental Policy Act (SEPA)review of development proposals and programs. **June 27, 2016 US District Court ruling could lead to future implications for counties and cities with culverts that impede fish passage.**
National Flood Insurance Act, Flood Disaster Protection Act	National Flood Insurance Program (NFIP)	Reduce property damage and public safety threats from flooding.	City enacts restrictions/requirements on develop-ment in floodplain and residents get reduced flood insurance rates in return. **The National Marine Fisheries Service issues a biological opinion requiring changes to the NFIP to comply with ESA.**
Endangered Species Act (ESA)	Listing of Chinook salmon as a threatened species	Prevent further decline of Chinook salmon populations through prohibition on "take" of the fish or their habitat.	City participates in Water Resource Inventory Area (WRIA) 8 Salmon Conservation Planning. Chinook salmon are present in Lake Sammamish.

Table 2- 1 Summary of regulations (continued)

Law	Program	Intent	Relevance to Sammamish
State and local regulations			
State Environmental Policy Act (SEPA)	City of Sammamish reviews proposals and issues SEPA determinations	Identify and require mitigation for the environmental impacts or proposals and programs.	SEPA is used to address impacts that are not covered in other City requirements.
Shoreline Manage-ment Act (SMA)	City of Sammamish Shoreline Master Plan	Protect use and functions (economic, ecological, aesthetics) of shoreline areas; implemented by Title 25 of Sammamish Municipal Code	Shoreline Master Program was updated in 2011.
Hydraulic Code	Revised Code of Washington	Set requirements for placement of culverts and other hydraulic devices that may impact fish use.	Project proposing work within the wetted perimeter of a stream must obtain Hydraulic Project Approval (HPA).
Growth Management Act (GMA)	City Comprehensive Plan, City zoning and critical areas regulations	Regulate land use to meet growth targets while providing necessary services and protecting sensitive environmental resources.	City of Sammamish Comprehensive Plan was recently updated (2015-2035). The Environmentally Critical Areas code (Title 21A) was recently updated in 2013. Surface Water Management is implemented under Title 13 of Sammamish Municipal Code.
Water Rights-Environment	Puget Sound Water Quality Protection	Restore the health of Puget Sound by 2020.	Sammamish is in the Sammamish and Cedar River Watershed, which makes up WRIA 8 and is part of the greater Puget Sound Basin.

NPDES Phase II Permit

The most recent NPDES Phase II Municipal Separate Storm Sewer (MS4) permit (Phase II Permit), effective August 1, 2013, has a number of modifications that need to be implemented by Sammamish. The primary changes are:

Monitoring—The Phase II Permit includes monitoring and assessment requirements that allow permittees to conduct individual monitoring or pay into a Regional Stormwater Management Program (RSMP) fund that is used for (1) status and trends monitoring data, (2) stormwater program effectiveness studies, and (3) source identification and diagnostic monitoring. Sammamish has opted to pay into the RSMP fund.

What is NPDES and why does it matter to Sammamish?

The National Pollutant Discharge Elimination System (NPDES) Phase II Permit is the permit that allows Sammamish to discharge stormwater from its stormwater system to receiving waters such as Lake Sammamish and other natural water bodies if the City follows the conditions of the permit. NPDES permit conditions are comprehensive and have largely shaped jurisdictional stormwater management programs in the region.

Low Impact Development (LID)—The Phase II Permit requires permittees to adopt LID site-scale standards and update development -related codes, as well as to adopt Ecology's 2014 Stormwater Management Manual for Western Washington (2014 Ecology Manual) or an equivalent manual that emphasizes the incorporation of LID standards and has a new LID performance standard for flow control. Sammamish currently uses the 2009 King County Surface Water Design Manual (SWDM) and can choose to adopt the 2014 Ecology Manual or a manual that has been deemed equivalent.

Operations and maintenance—The Phase II Permit has new inspection and maintenance frequencies, increasing catch basin inspections from once a permit cycle to every two years and maintenance within 6 months of inspection.

Threshold for sites requiring flow control—The Phase II Permit changes the site size threshold for controlling runoff from new development, redevelopment, and construction from 1 acre to all sites regardless of size.

Illicit discharge detection and elimination—The Phase II permit requires 40% of the City-owned stormwater system to be field screened by December 31, 2017, and 12% of the City-owned stormwater system to be screened each year thereafter.

Education and outreach—Requires measureable behavior changes and modifications to outreach program.

"Culvert case" and fish passage

In June 2016, the U.S. District Court sided with the Tribes against Washington State in an earlier March 2013 ruling that the State had appealed. This case, known as the "culvert case" was based on the assertion that it wasn't fulfilling its obligations to remove barriers that impede fish movement. The ruling requires the state to accelerate its program to upgrade and replace state-owned culverts and also has broader implications than earlier rulings to also promote conditions that support salmon recovery.

In March 2014, the Washington State Senate passed a bill (2SHB 2251) that requires all fish barrier removal projects sponsored by local governments to use a streamlined permit review process in RCW 77.55.181. The bill also establishes a fish barrier removal board to coordinate efforts to identify and prioritize fish barrier removals. Several Sammamish streams, including Ebright , Pine Lake , Zackuse , George Davis , and Laughing Jacobs Creeks, may have historically supported spawning for Lake Washington kokanee salmon. Currently, kokanee have only been observed in Ebright and Pine Lake Creeks, and the mouth of George Davis Creek.

The City should begin prioritizing culverts for removal and replacement for fish passage, and to benefit Lake Sammamish kokanee salmon in anticipation of future rulings.

A high-priority barrier on Ebright Creek was replaced in 2012, opening up new habitat. A recent report by the Kokanee Work Group, *Blue Print for the Restoration and Enhancement of Lake Sammamish Kokanee Tributaries* (Lake Sammamish Kokanee Work Group, 2014), identified three other culvert replacement opportunities on Ebright Creek, two culvert modification or replacement opportunities on Pine Lake Creek, and three culvert replacement opportunities on Zackuse Creek to support fish passage.

Other related regulations

In addition to directly related regulations, such as NPDES, which is a program under the Clean Water Act (CWA), the Growth Management Act (GMA) (Chapter 36.70A RCW), and the Shoreline Management Act (SMA) have significant overlap with surface and stormwater management programs. The GMA requires jurisdictions within urban growth areas, such as Sammamish, to conduct comprehensive City planning, and develop policies and regulations that protect the functions and values of critical areas (Chapter 36.70A.172 RCW). The SMA of 1971 (Chapter 90.58 RCW) requires local governments to develop shoreline management programs that protect the public interest associated with shorelines of the state while, at the same time, recognizing and protecting private property rights consistent with the public interest.

Wetland in Sammamish

Growth Management Act and environmentally critical areas

The City regulates environmentally critical areas under Sammamish Municipal Code 21A.50, as required by the Washington State GMA (Chapter 36.70A.172 RCW). These include erosion hazard areas, erosion hazard near sensitive water body overlay areas, frequently flooded areas, landslide hazard areas, seismic hazard areas, critical aquifer recharge areas, wetlands, fish and wildlife habitat conservation areas, fish and wildlife habitat corridors, streams, and lake management areas. These critical areas are, more often than not, linked to the built and natural surface and stormwater system. The City's wetlands, streams, and critical aquifer recharge areas provide beneficial surface water functions, and stormwater regulations are designed to protect these important functions.

Beaver Lake shoreline

Shoreline Management Act

The western boundary of Sammamish abuts Lake Sammamish, and all of the Lake Sammamish, Beaver Lake and Pine Lake shorelines are designated shorelines of the state within the SMA. The City's Shoreline Management Program was updated in 2011 (City of Sammamish 2011). Conservation goals listed in the Shoreline Management Program that are directly or tangentially related to surface and stormwater management include:

- Preserve, enhance, and/or protect shoreline resources (i.e., wetlands and other fish/wildlife habitats) for their ecological functions and values and aesthetic and scenic qualities.
- Maintain natural dynamic processes of shoreline formation and sustainability through effective stewardship, management, and use of shorelines.
- Where feasible, enhance or restore areas that are biologically and/or aesthetically degraded while maintaining appropriate use of the shoreline.

- Maintain or enhance shoreline vegetation to protect water quality, fish and wildlife habitat, and other ecological functions and processes.
- Implement policies that can help reverse impacts caused by existing or past development activities, such as untreated stormwater discharges, that adversely affect ecological or shoreline functions.
- Manage the City's programs, services, and operational infrastructure in a manner that achieves no net loss of ecological or shoreline functions.
- Achieve no net loss of ecological functions of Sammamish shorelines.

The City's environmental principles are evident in the goals outlined in its Shoreline Management Program. Effective stormwater management helps achieve these goals.

Development code

Land use and activities conducted in Sammamish directly affect surface and stormwater management through the creation of impervious surfaces and pollution-generating activities. The City's development code is designed to ensure that development is carried out in locations and using methods that are safe, do not negatively impact public resources, and fit within the overall context of the City's neighborhoods. The City's comprehensive plan lays out goals and policies related to development activities, and the development code outlines how the goals and policies are to be met. Surface water management is included in Chapter 13 of the Sammamish Municipal Code (SMC). For example, the Sammamish Development Code (Chapter 21A) describes protection for environmentally critical areas in Chapter 21A.50 and for Low Impact Development in Chapter 21A.85.

Cartoon schematic of community with LID facilities

Sammamish Community and Aquatic Center green roof

Low Impact Development

The Phase II Permit requires the City to review, revise, and make effective its local development-related codes, rules, standards, or other enforceable documents to incorporate and require low LID principles and LID best management practices (BMPs). In addition to the Phase II Permit, the City's 2015 Comprehensive Plan provides the foundation and policies to support updates to the Sammamish Municipal Code. Relevant LID policies in the 2015 Comprehensive Plan are listed below:

Policy EC.5.42 Promote low impact development (LID) measures that preserve natural discharge patterns.

Policy CF.4.1 Design natural infrastructure into projects whenever feasible to mimic ecological processes and minimize the need for built infrastructure.

Policy CF.4.5 Use environmentally sensitive building techniques and low impact surface water methods.

Policy CF.4.10 Promote water reuse and water conservation opportunities that diminish impacts on water, wastewater, and surface water systems.

Policy T.4.2 Require where feasible the use of rain gardens and other techniques to reduce pollutants in storm drains.

Policy T.4.5 Design and operate transportation facilities in a manner that is compatible with and integrated into the natural and built environment including features, such as natural drainage, native plantings, and local design themes.

SECTION 3– NATURAL RESOURCES AND EXISTING INFRASTRUCTURE

This section describes the current conditions of the natural and constructed surface and stormwater system within Sammamish, as well as the characteristics that influence surface and stormwater runoff.

The City is 24 square miles in size and ranges in elevation from about 500 feet above mean sea level (MSL) in the eastern part of the City, to about 50 feet above MSL at Lake Sammamish, which forms the western City border. The physical, biological, and built environment all affect and are affected by surface and stormwater runoff, and are important considerations in how stormwater is managed in Sammamish.

The City includes several small drainage basins, most of which drain to Lake Sammamish (Figure 3-1).

Over 95% of Sammamish is zoned residential. Rooftops and roads are the primary impervious surfaces that contribute to stormwater runoff.

How does land cover and zoning affect surface and stormwater?

Land cover and zoning conditions in Sammamish relate directly to surface and stormwater runoff characteristics, as impervious surfaces like roads, roofs, and parking lots change hydrologic conditions. These changes in land cover result in more surface water runoff than is generated under Pacific Northwest pre-development conditions, wherein infiltration and shallow in-flow are more typical. In order to prevent flooding and other drainage problems, the runoff is conveyed away from the built environment to constructed drainage systems, which are managed and maintained. In newer developments, stormwater management facilities are part of the constructed drainage system, and are designed to mimic existing runoff peaks and durations and remove pollutants before the stormwater discharges to streams or other water bodies.

Exhibit 2

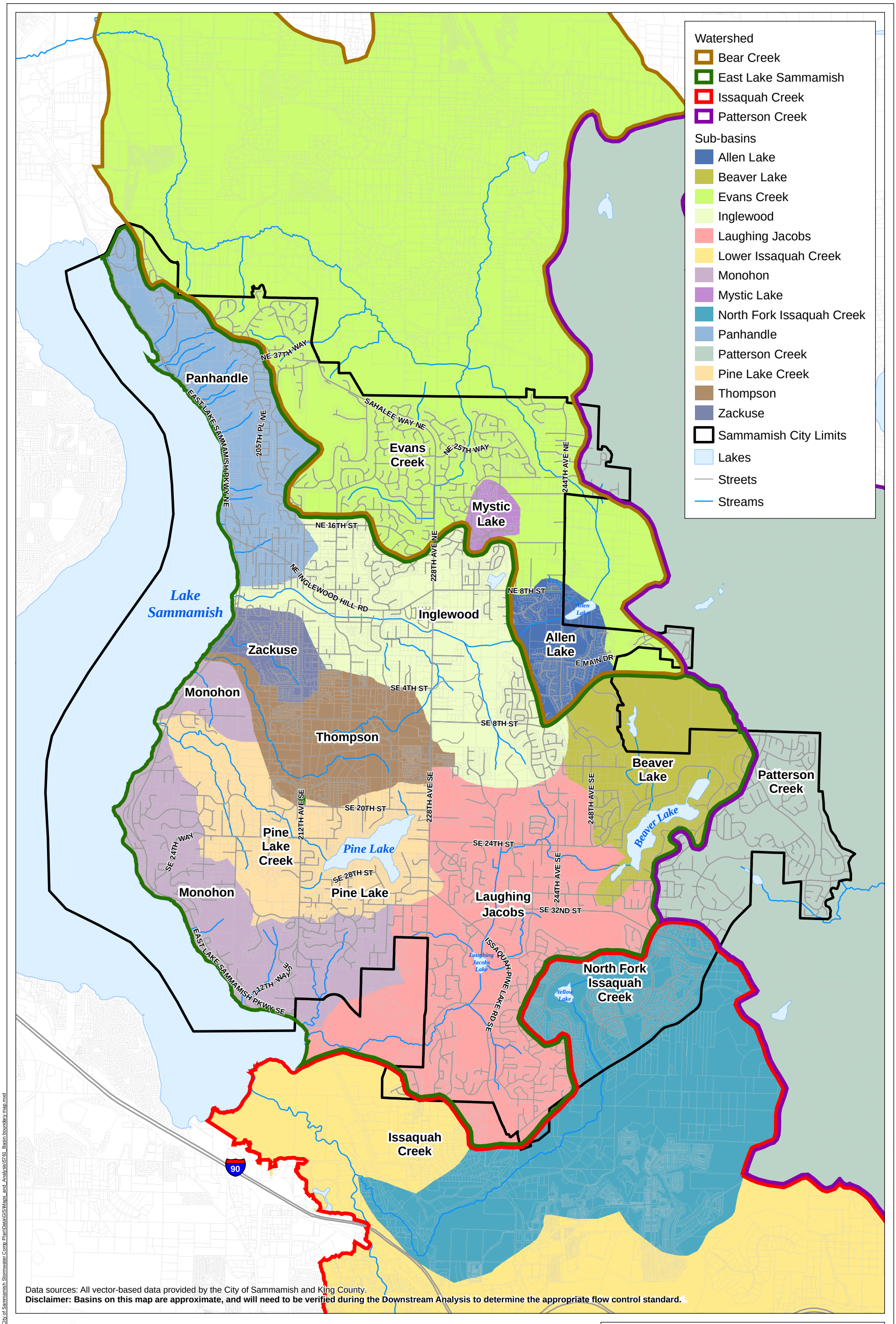

Data sources: All vector-based data provided by the City of Sammamish and King County.
Disclaimer: Basins on this map are approximate, and will need to be verified during the Downstream Analysis to determine the appropriate flow control standard.

City of Sammamish Washington

Windward environmental LLC

N

0 0.5 1 Miles

0 2,000 4,000 Feet

Figure 3-1. Sub-basins

DRAFT

Prepared by mikey, 4/19/2016, W:\Projects\City of Sammamish Stormwater Comp Plan\Data\GIS\Maps and Analysis\5761 Basin boundary map.mxd

The City is primarily residential (more than 95%) and is zoned in that regard (Table 3-1 and Figure 3-2). Rooftops and roads are the primary impervious surfaces that contribute to stormwater runoff. Over 75% of the City is zoned for four units or fewer per acre. Over 19% of the City is zoned between six and eighteen units per acre. Only about 2% of the City is zoned commercial, office, or Town Center (land uses that typically have higher percentages of impervious surfaces) and 2% is zoned for Parks (Special Districts).

Table 3-1 Summary of land area by zoning classification

Comprehensive Plan Description	Acres	Percent of City
Residential- 1 units/acre	2,460	21
Residential- 4 unit/acre	6,287	54
Residential- 6 units/acre	2,117	18
Residential- 8 units/acre	91	<1
Residential- 12 units/acre	65	<1
Residential- 18 units/acre	140	1
Commercial	60	<1
Office	12	<1
Town Center B	76	<1
Town Center C	37	<1
Town Center A-1	27	<1
Town Center A-2	19	<1
Town Center A-3	10	<1
Town Center A-4	7	<1
Town Center A-5	2	<1
Town Center D	39	<1
Town Center E	13	<1
Neighborhood	2	<1
Parks (Special Districts)	226	2
Total	**~11,690**	**100**

Exhibit 2

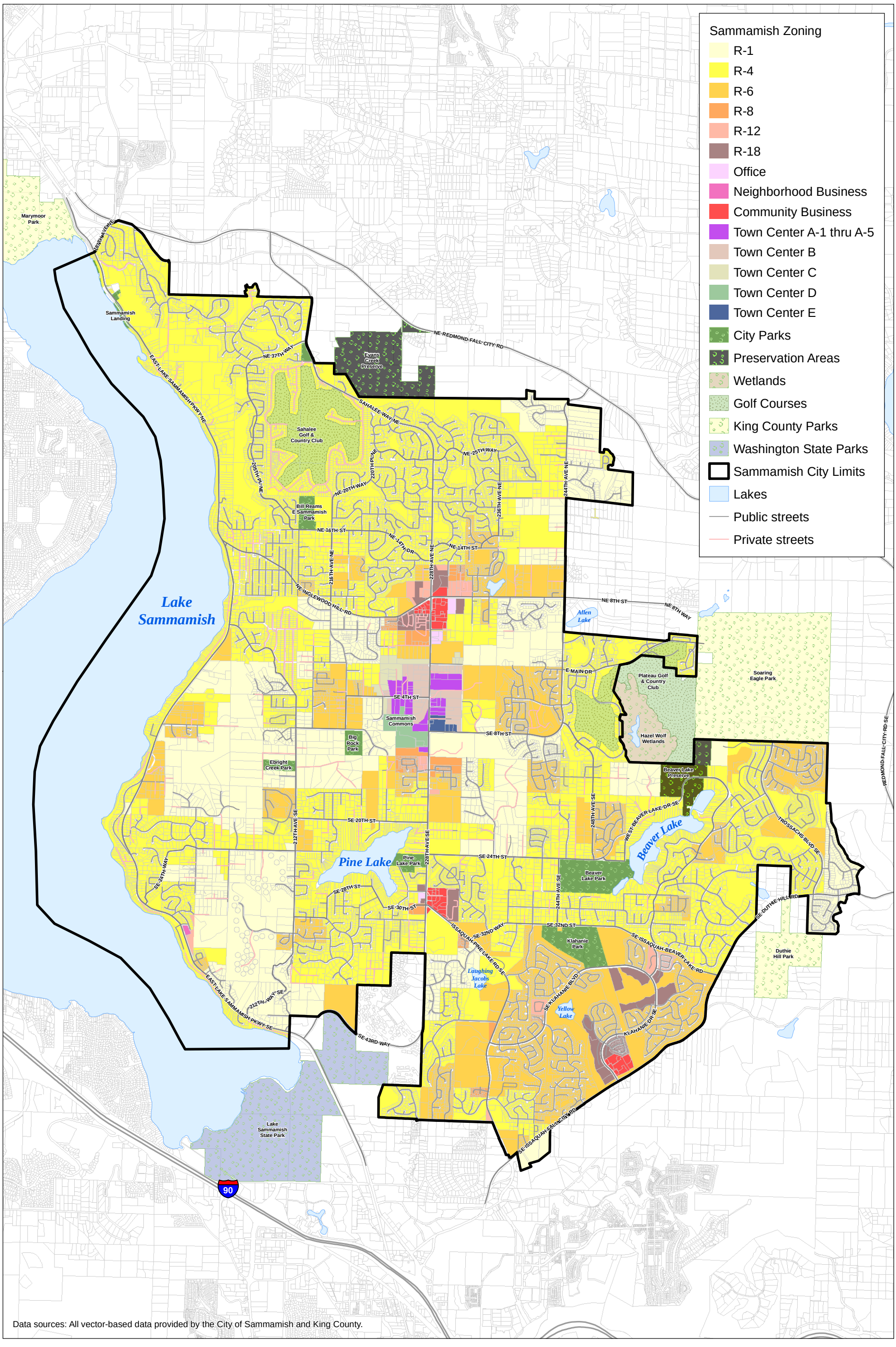

City of Sammamish Washington

Windward environmental LLC

N

0 0.5 1 Miles

0 2,000 4,000 Feet

Figure 3-2. Zoning

DRAFT

Prepared by mikey, 4/19/2016, W:\Projects\City of Sammamish Stormwater Comp Plan\Data\GIS\Maps and Analysis\572_Zoning map.mxd

Sammamish has made efforts to develop and preserve open space and parks for its residents. The City owns and operates a variety of open space and park properties that provide over 200 acres of outdoor recreational opportunities for residents, and that preserve natural areas that enhance aquatic habitat and provide surface water management functions such as flow attenuation (wetlands), temperature regulation (riparian vegetation), and water quality treatment (filtration of pollutants through vegetation). Additionally, protected wetlands both inside and outside City boundaries provide surface water management benefits. Table 3-2 lists the parks and open space in the City and bordering areas, and the surface water connection.

Table 3-2 Summary of parks and open space properties

Park or Open Space	Surface Water Connection	Size (acres)
Beaver Lake Preserve	Headwaters of Beaver Lake and Laughing Jacobs Creek	72.4
Ebright Creek Park	Upland adjacent to Ebright Creek	12.3
Big Rock Park	Headwaters of Ebright Creek	15.9
Sammamish Commons	Headwaters of Ebright Creek	38.9
Pine Lake Park	Headwaters of Pine Lake and Pine Lake Creek	18.9
Beaver Lake Park	Headwaters of Beaver Lake and Laughing Jacobs Creek	79.2
Hazel Wolf Wetlands*	Headwaters of Beaver Lake and Laughing Jacobs Creek	115.9
Evans Creek Preserve	Evans Creek	179.1 (Borders Sammamish' northern boundary in unincorporated King County)
Bill Reams E. Sammamish Park	None	19.3
NE Sammamish Neighborhood Park	Critical aquifer recharge	4.2
Sammamish Landing	Lake Sammamish	5.2
	Total	**~561 acres**

*Hazel Wolf Wetlands are located in unincorporated King County.

Why does geology matter for stormwater management?

Geologic conditions influence infiltration, erosion, and hillslope and stream processes that can be affected by or affect surface water runoff.

Interflow and lateral groundwater seepage should be considered in areas where Infiltration occurs in recessional or advance outwash, especially in erosion and landslide hazard areas.

What are the geologic conditions in Sammamish?

Geologic conditions in Sammamish influence how surface water is naturally conveyed across the landscape, and also influence stormwater management alternatives and stormwater impacts. Geologic features of the East Lake Sammamish Plateau have been mapped by Derek B. Booth and others at the U.S. Geological Survey (Booth et.al. 2012). A simplified surficial geologic map compiled from Washington Department of Natural Resources (DNR) on-line 1:24,000 scale surface geology (Washington DNR 2016) is shown in Figure 3-3. The geology of the Puget Sound region is influenced by its glacial history; the Fraser Glaciation reached its maximum extent approximately 15,000 years ago covering Puget Sound and Sammamish. Most of the geologic features in Sammamish are a result of the Vashon Stade of the Fraser Glaciation. The upland areas of the Sammamish Plateau are mantled by Vashon Till, a densely compacted, poorly sorted mixture of boulders, cobbles, gravel, and sand in a matrix of silt and clay, often identified in drillers' logs as "hardpan." The till is as thick as 150 to 200 feet thick in some upland areas of the Sammamish Plateau; the presence of till is an important consideration for stormwater management techniques because it is more difficult, though not impossible, to infiltrate stormwater in these areas due to the compact nature and low permeability of the till.

The Vashon Till is locally overlain by Vashon Recessional Outwash deposits; a poorly to well-sorted, light gray, stratified gravel and sand with minor amounts of silt and clay deposited behind the receding glacier.

Exhibit 2

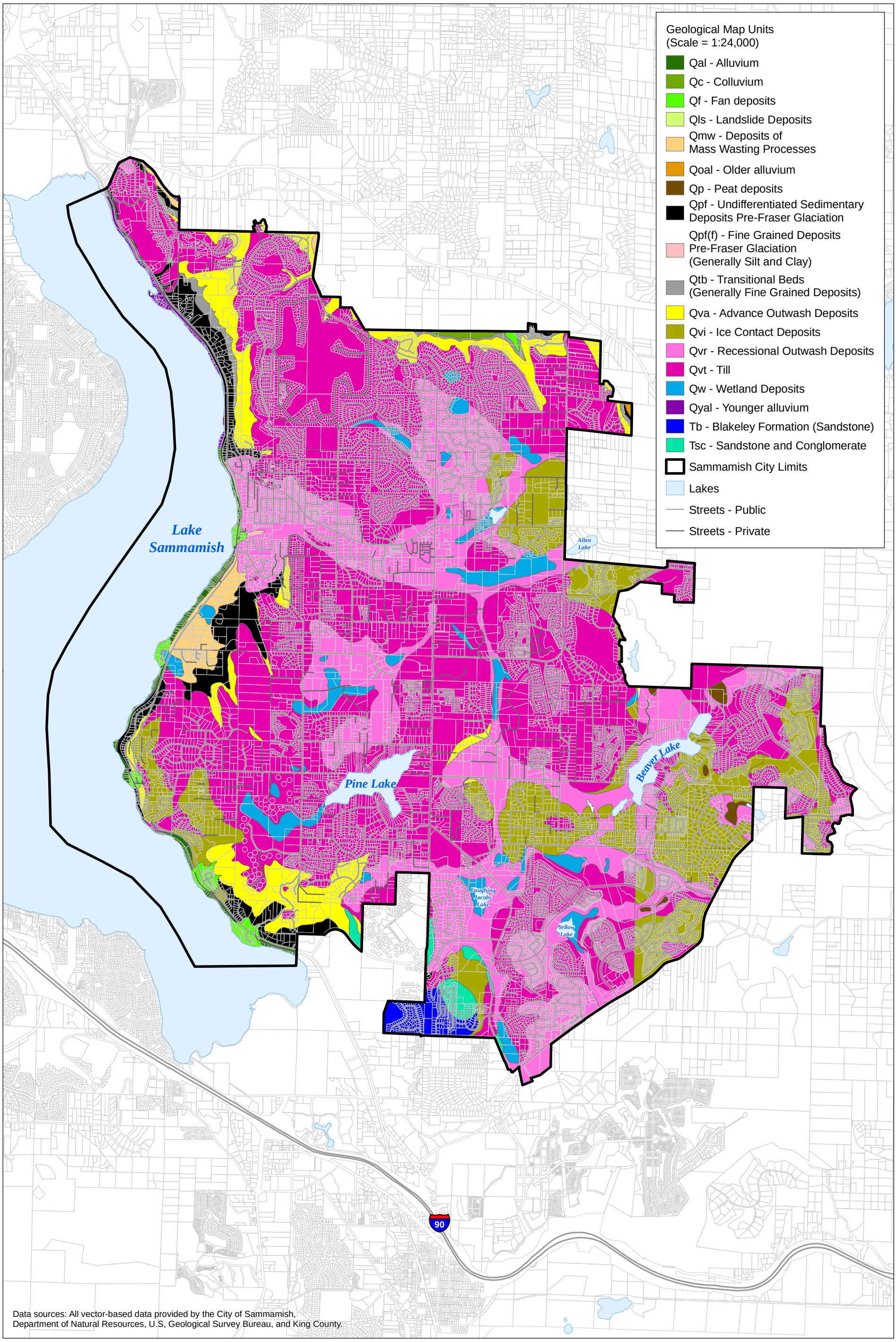

City of Sammamish Washington

Windward environmental LLC

N

0 0.5 1 Miles

0 2,000 4,000 Feet

Figure 3-3. Geology

DRAFT

Prepared by mikey, 4/19/2016, W:\Projects\City of Sammamish Stormwater Comp Plan\Data\GIS\Maps and Analysis\5767a Geology map.mxd

Landslide adjacent to George Davis Creek

Underlying the Vashon Till is Vashon Advance Outwash that consists of variably compacted sand and gravel deposited by streams and rivers ahead of the advancing glacier. Vashon Advance Outwash is typically variable in grain size, fluctuating from silt to gravel and from well sorted to unsorted. The Vashon Advance Outwash is generally more compacted than the recessional outwash due to the pressure of overriding glaciers.

Pre-Vashon glacial deposits, including both glacial and non-glacial units, underlie the Vashon Advance Outwash. These units are generally finer grained, and this is commonly where groundwater seepage is observed: at the interface between the overlying advance outwash and the finer-grained older deposits.

Other surficial units include alluvium, wetland deposits, and mass-wastage deposits that result from landslide activity.

What types of drainage impacts do landslides cause?

In addition to property hazards, landslides contribute sediment and debris to stream channels, clogging culverts and pipes, and blocking drainage pathways, resulting in flooding.

Landslide Hazards and Landslide Hazard Drainage Areas

Landslide hazard areas in Sammamish are present along most of the western flank of the plateau adjacent to Lake Sammamish, predominately in the steep ravines that carry stream channels from their points of origin on top of the plateau to Lake Sammamish. Erosive advance outwash is exposed in the ravines and contributes to landslide activity, especially under saturated conditions or where surface water discharges have been directed to these slopes. Most commonly, landslides occur where there is a veneer of looser soils (advance outwash) overlying the denser soils (pre-glacial fine, denser materials) on steeply inclined hillsides. Slide hazard areas are shown on Figure 3-4. Sammamish protects landslide hazard areas by establishing buffers and restricting activities within the buffers, and current stormwater management manuals outline guidelines for stormwater drainage near landslide hazard areas and landslide hazard drainage areas.

Exhibit 2

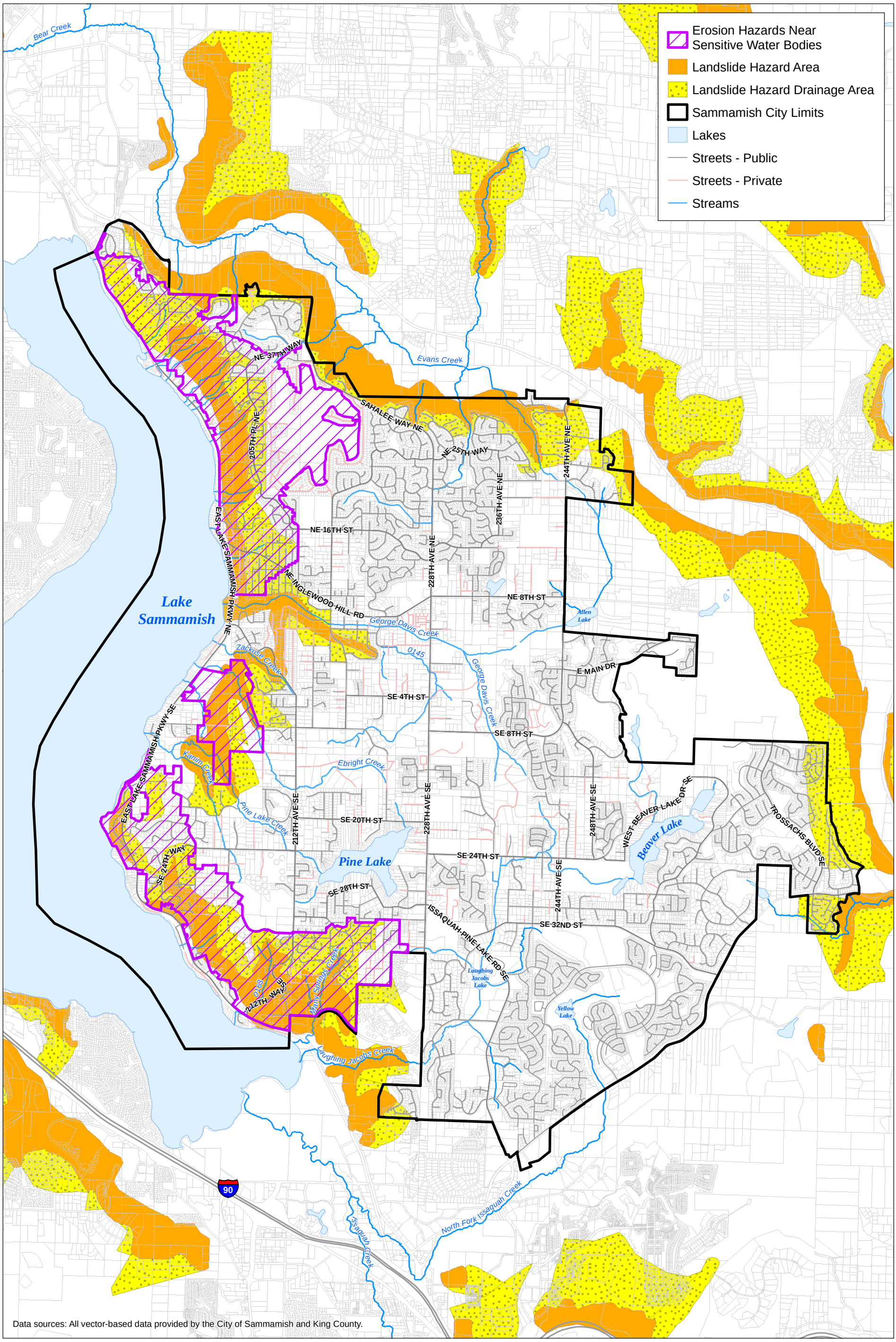

City of Sammamish Washington

Windward environmental LLC

N

0 0.5 1 Miles

0 2,000 4,000 Feet

Figure 3-4. Erosion and Landslide Hazard

DRAFT

Prepared by mikey, 4/19/2016; W:\Projects\City of Sammamish Stormwater Comp Plan\Data\GIS\Maps and Analysis\6098 Landslide drainage hazards.mxd

What is the erosion hazard near sensitive waterbody overlay?

This critical areas overlay is specific to sensitive lakes that could be damaged by erosion hazards in areas that drain directly to these water bodies.

Erosion Hazards and Erosion Hazards near Sensitive Water Bodies

Erosion is linked to a variety of characteristics including surface water runoff, geology, and topography. Erosion is often attributed to surface and stormwater runoff, and it has implications for stormwater managers. Sediment eroded and deposited in stream channels or stormwater infrastructure can reduce conveyance capacity and lead to flooding, degrade habitat, and degrade water quality conditions. Because erosion is linked to stormwater management and land development activities, stormwater management manuals include prescriptions for temporary erosion and sediment control plans for new construction, and stormwater management BMPs are often designed to remove sediment. Geologic conditions make many areas of the City susceptible to erosion because of steep slopes and erodible soils. Erosion hazard maps have been prepared for the environmentally critical areas code, and development standards have been established for erosion hazards near sensitive water bodies (SMC 21A.50.225(3)(a) (Figure 3-4). The code restricts development in a no-disturbance area to prevent sediment transport from sites with highly erodible soils to sensitive receiving waters. The erosion overlay includes most of the steep slopes on the western border of the City. Erosion hazards near sensitive receiving waters overlay is also shown in Figure 3-4.

How do natural resources connect the City's surface and stormwater system?

The City Comprehensive Plan reflects a strong emphasis on the value of and need to protect environmentally sensitive areas as discussed in Section 1. Natural resources, particularly aquatic natural resources, are part of the City's surface and stormwater systems, as flows from the built systems ultimately end up in the natural systems, whether through outfalls to the City's streams, wetlands, or lakes or through groundwater connections to these same water bodies. The riparian, shoreline, and upland areas adjacent to the aquatic natural resources are also important contributors to water quality and habitat conditions. In addition to flood prevention, surface and stormwater regulations are designed to protect ecological functions that support beneficial uses for both aquatic life and humankind.

The City of Sammamish has high-quality natural resources, including over 800 acres of wetlands and over 30 miles of stream corridor.

Sammamish is fortunate to have high-quality natural resources, including over 800 acres of wetlands, 10 sphagnum bogs, 30 miles of streams (5 streams support kokanee spawning), and 3 large lakes.

Lakes and Shorelines

Sammamish is bounded to the west by Lake Sammamish, one of the region's largest freshwater lakes, which is also the ultimate receiving water for approximately 2/3 of the entire City area. Other lakes in Sammamish include Beaver and Pine Lakes. Laughing Jacobs, Yellow, and Mystic Lakes are large wetlands that are commonly referred to as lakes. Shorelines for most of these lakes are dotted with homes and private parcels. Table 3-3 lists the lakes in Sammamish and special considerations with regard to water quality or stormwater management.

Allen Lake

Are there any mapped flood-plains in Sammamish?

The only designated 100-year floodplain in Sammamish is Lake Sammamish. Localized flooding has been reported in wetlands and streams in the City.

The two largest lakes fully contained within Sammamish, Beaver Lake and Pine Lake, have established lake management areas under the environmentally critical areas code (Section 21A.50.355). The edges of these lakes are also considered shorelines of the state, and as such are managed under the City's Shoreline Master Program which was approved by Ecology in 2011 (City of Sammamish 2011). Plans have been developed for both Beaver Lake and Pine Lake to manage water quality, particularly phosphorus inputs that contribute to algal blooms and consequent lake eutrophication. Stormwater BMPs that can achieve 80% reduction in phosphorus are among the recommended methods for controlling phosphorus inputs to these sensitive lakes, along with source control methods.

Table 3-3 Lakes in Sammamish

Lake	Area (acres)	Special Considerations
Lake Sammamish	4,849	Phosphorus sensitive and listed on 2012 303(d) for Category 5 impairment by fecal coliform and phosphorus
Beaver Lake	71.2	Phosphorus sensitive
Pine Lake	85.7	Phosphorus sensitive and listed on 2012 303 (d) for Category 5 impairment by fecal coliform
Laughing Jacobs Lake*	7.7	Phosphorus sensitive
Yellow Lake*	8.8	To be determined; recently annexed
Mystic Lake*	10.9	To be determined; recently annexed

*Technically a wetland, but more commonly referred to as a lake.

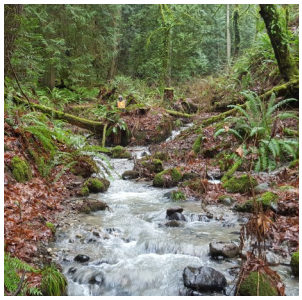

George Davis Creek

The City's Final Shoreline Restoration Plan, completed as part of the Shoreline Master Program update (ESA Adolfson 2008), recommends several stormwater management programmatic alternatives and restoration projects to meet program goals, including:

- Implementation of City-wide LID BMPs
- Implementation of BMPs to reduce erosion and sediment inputs
- Retrofit existing roads to provide water quality treatment
- Protect and restore wetlands in upper watershed to provide water quality benefits

Streams

There are 19 mapped stream channels that enter Lake Sammamish, draining the upland Sammamish plateau. Flow in some of these stream channels is supplied by large wetlands located near the headwaters. Table 3-4 lists streams and lengths that are in open channel or pipes; these are also shown in Figure 3-5.

Table 3-4 Summary of streams and pipe/open channel lengths

Stream Name	Length (miles)	
	Pipe	**Open Channel**
Trib 145	0.04	0.77
Trib 163		0.67
George Davis Creek	0.02	3.01
Ebright Creek		2.33
Kanim Creek		1.31
Laughing Jacobs Creek		3.14
Many Springs Creek		0.65
North Fork Issaquah Creek		1.16
Pine Lake Creek		1.86
Zackuse Creek		0.84
Un-named Channels	0.29	18.58
Total Lengths	**0.35**	**34.33**

Wetland 61—view from above

Wetlands

There are over 160 mapped wetlands in Sammamish, ranging from less than 1 acre in size to over 100 acres. Over ten of the City's wetlands have been mapped to include sphagnum bog ecosystems, and two additional bogs are located outside of the City limits within the City's urban growth boundaries (AMEC 2012a). Bogs are recognized for their unique characteristics that require hundreds to thousands of years to form (U.S. EPA 2012), and as such are irreplaceable within the average human lifespan.

Bogs are also very sensitive to changes in water chemistry that can result from stormwater inputs (Horner et al. 1997). Wetlands in Sammamish support a variety of wildlife, including amphibians, deer, small mammals, songbirds, woodpeckers, waterfowl, and mammals. Table 3-5 lists the acreage of wetlands in each drainage basin, and Figure 3-5 shows the wetland locations and identification numbers (King County ID).

Table 3-5 Summary of wetland acreage in Sammamish

Basin	Total Wetland Acreage
Allen Lake	47.6
Beaver Lake	132.7
Evans Creek	68.2
Thompson (Ebright)	49.8
Inglewood (George Davis)	136.5
Laughing Jacob's	126.2
Monohon-North	8.4
Monohon-South	5.9
Mystic Lake	12.5
North Fork Issaquah Creek	45.9
Panhandle	8.6
Patterson Creek	40.2
Pine Lake	155.4
Total	**837.9**

Exhibit 2

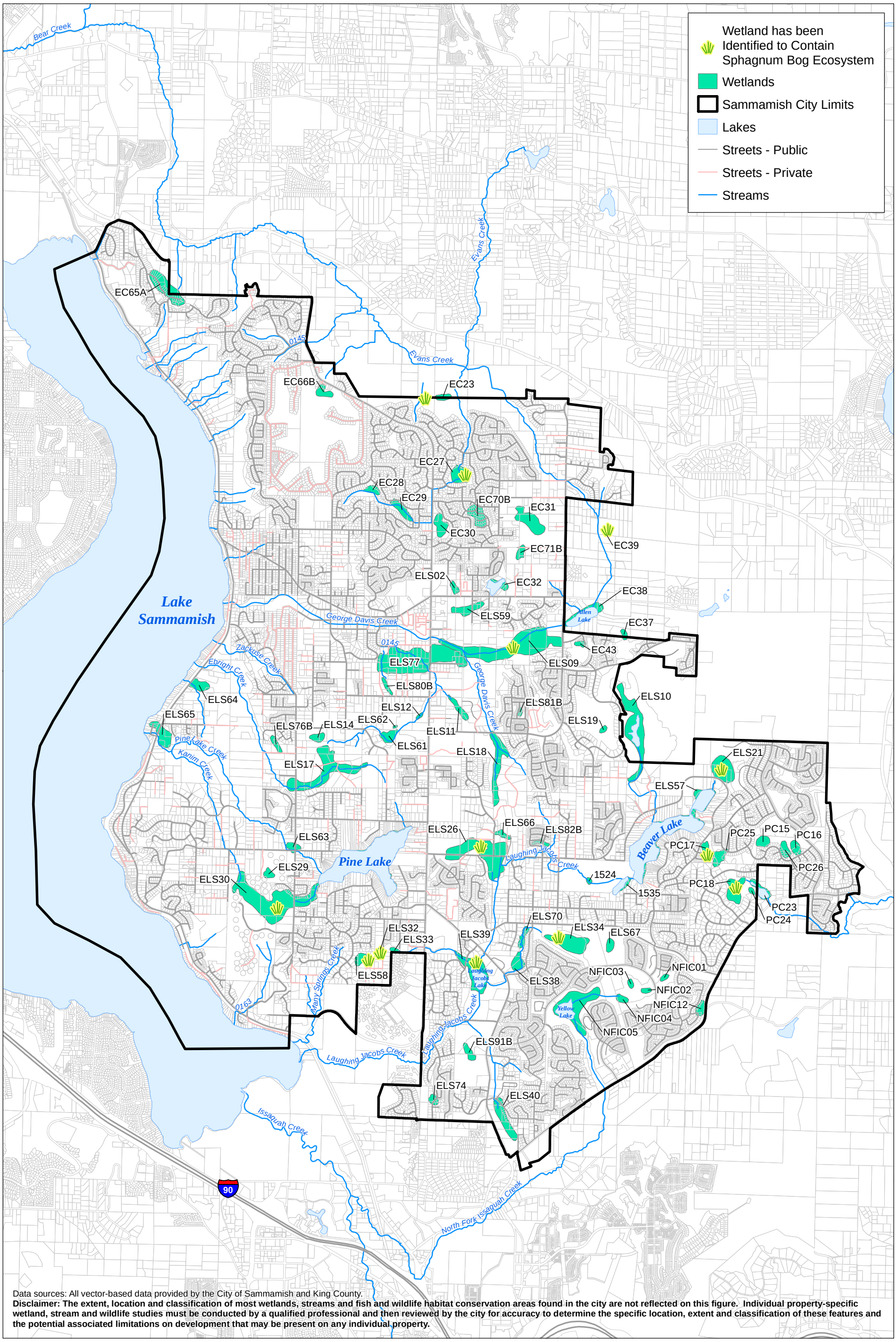

Data sources: All vector-based data provided by the City of Sammamish and King County.

Disclaimer: The extent, location and classification of most wetlands, streams and fish and wildlife habitat conservation areas found in the city are not reflected on this figure. Individual property-specific wetland, stream and wildlife studies must be conducted by a qualified professional and then reviewed by the city for accuracy to determine the specific location, extent and classification of these features and the potential associated limitations on development that may be present on any individual property.

City of Sammamish Washington

Windward environmental LLC

N

0 0.5 1 Miles

0 2,000 4,000 Feet

Figure 3-5. Wetlands and Streams

DRAFT

Prepared by mikey, 4/19/2016, W:\Projects\City of Sammamish Stormwater Comp Plan\Data\GIS\Maps and Analysis\5763 Wetlands map.mxd

Why do critical aquifer recharge areas matter for stormwater management?

Surface water is connected to ground water through infiltration and groundwater seepage; it is important to understand these connections and linkages when developing stormwater management alternatives.

Critical Aquifer Recharge Areas

Critical aquifer recharge areas (CARA) are areas in Sammamish where groundwater could be most vulnerable to contamination from surface activities due to specific aquifer characteristics. There are several deep municipal water wells in Sammamish that provide drinking water to Sammamish Plateau Water and District and Northeast Sammamish Sewer and Water District customers. Wellhead protection zones have been formed around these municipal wells. The wellhead protection zones correlate with critical aquifer recharge classes identified in the City's environmentally critical areas code. Some domestic wells are also completed in the shallower aquifer that is present in the advance outwash.

The City's environmentally critical areas code designates the area with surficial geology mapped as advance outwash as a category 3 CARA (Figure 3-6). On-site infiltration of 75% of all stormwater generated on-site for new developments is required in all CARAs in order to replenish aquifers, unless it is shown that water quality will be diminished or other consequences of infiltration may arise. However, deep injection of stormwater is not allowed in class 1 and 2 CARAs, rather only in class 3 CARAs where appropriate water quality BMPs are in place.

Exhibit 2

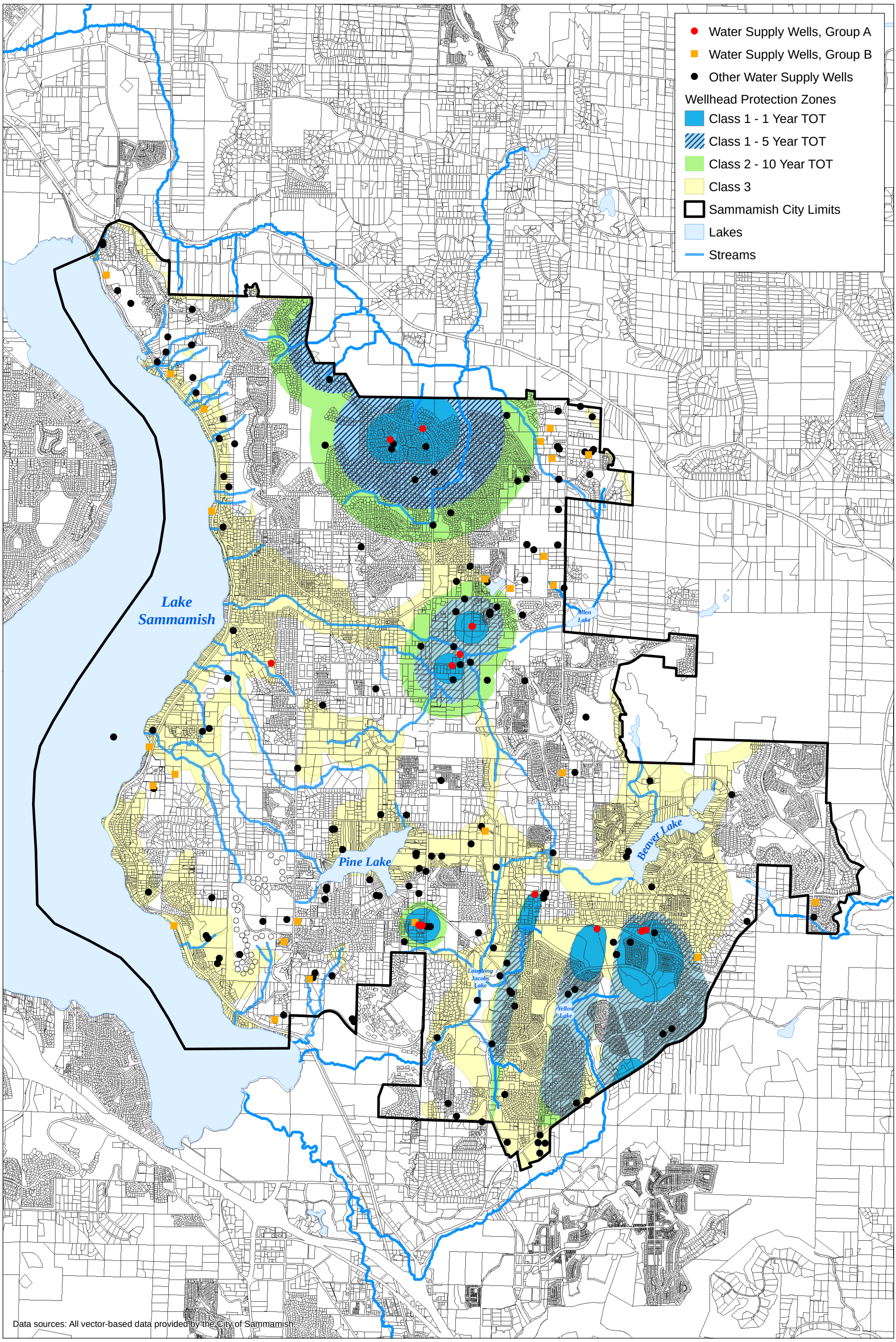

City of Sammamish Washington

Windward environmental LLC

N

0 0.5 1 Miles

0 2,000 4,000 Feet

Figure 3-6. Critical Aquifer Recharge Areas

DRAFT

Prepared by mikey, 3/24/2016, W:\Projects\City of Sammamish Stormwater Comp Plan\Data\GIS\Maps and Analysis\6097_Critical area recharge areas.mxd

Kokanee salmon
spawning in Ebright Creek

What fish species do the City's water bodies support?

Lake Sammamish and the surrounding watershed is home to a unique population of kokanee salmon (Lake Sammamish kokanee), and streams within Sammamish, including Ebright Creek, Pine Lake Creek, Zackuse Creek, George Davis Creek, and Laughing Jacobs Creek, provide important spawning habitat.

Other fish species known to be present in Sammamish streams include coho salmon, sockeye salmon, cutthroat trout (AMEC 2012b), and pea-mouths (observed).

Puget Sound Chinook salmon were listed as threatened under the federal Endangered Species Act. Although not known to spawn in Sammamish stream channels, Chinook salmon are present in Lake Sammamish and do migrate through the lake to reach spawning habitat in Issaquah Creek. Therefore, the shoreline of Lake Sammamish is potentially important Chinook rearing habitat (AMEC 2012b).

What are the water quality conditions of the City's water bodies?

The State of Washington lists the water quality status of water bodies in Washington to meet the federal requirements of Sections 303(d) and 305(b) of the Clean Water Act. Water quality is assessed to determine attainment of state surface water quality standards (WAC 173-201A) and sediment management standards (WAC 173-204). The State's most recent water quality assessment was reported in 2012.

Draft listings are reported for 2014 but have not been finalized. The water bodies are classified into categories ranging from 1 to 5, based on data collected. Category 1 waters meet tested standards for water quality; Category 2 indicates waters of concern; Category 3 indicates insufficient data; and Category 4 waters are of concern, but do not require a total maximum daily load (TMDL) because one is already in place, another pollution control program is in place, or a TMDL is not appropriate for the type of impairment (i.e., dams, low flow). Waters on the 303(d) Category 5 list require a cleanup plan such as a TMDL, which identifies how much pollutants need to be reduced to achieve surface water quality standards. Ecology is the lead entity in the development of TMDL cleanup plans. If a plan were to be developed for one of the water bodies in Sammamish, Ecology would work with the City, other local jurisdictions, and the community to develop an appropriate implementation plan to achieve water quality improvement and meet water quality standards.

Three streams (Ebright, George Davis, and Pine Lake Creeks) that are entirely within Sammamish's jurisdiction are on the 2012 Ecology 303(d) Category 5 list for water quality impairment by bacteria and/or dissolved oxygen. However, the state's candidate 2014 list recommends Ebright Creek be moved to Category 1 for bacteria because of improving conditions based on more recent data. Additionally, Laughing Jacobs Creek is on the Category 5 303(d) list for bacteria and dissolved oxygen. The 2014 candidate listings include bioassessment data from the benthic index of biologic integrity (B-IBI) data collected by King County. Ebright, George Davis, Laughing Jacobs, and Pine Lake Creeks, as well as a tributary to Evans Creek are also listed as candidate Category 5 streams for poor B-IBI scores, which is indicative of water quality. Table 3-6 lists the stream reach, pollutant, and category of impairment. Common sources of bacteria are fecal matter from wildlife, domestic pets, and sewage.

What is the quality of water in Sammamish streams?

Generally speaking, the quality of water in Sammamish streams is typical of urban and suburban areas, with the primary concerns being fecal coliform bacteria, elevated temperature, and low dissolved oxygen.

Table 3-6 Summary of stream reaches on 2012 Ecology 303(d) list and 2014 candidate listings

Stream	Category (2014 Candidate Category)	On the List Since:	Type of impairment								
			T	Hg	FC	pH	DO	NH3	B-IBI	P	Other
Ebright Creek	1	2004				X		X			
Ebright Creek	5 (1)	2004			X						
Ebright Creek	2	2004					X				
Ebright Creek	(5)	new							X		
Tributary to Evans Creek	(5)	2004							X		
George Davis Creek	5	1996			X						
George Davis Creek	2	2004				X					
George Davis Creek	(5)	new	X						X		
George Davis Creek	(2)	new					X				
Pine Lake Creek	1	2004				X		X			
Pine Lake Creek	5	1996			X						
Pine Lake Creek	5	2004					X				
Pine Lake Creek	(5)	new	X						X		
Pine Lake	2*	2004			X						
Pine Lake	5 (1)	2004								X	
Laughing Jacobs Creek	5	2004					X				
Laughing Jacobs Creek	(5)	new	X						X		
North Fork Issaquah Creek	2 (5)	2004	X								
North Fork Issaquah Creek	1 (5)	2004					X				
North Fork Issaquah Creek	4A	2004			X						
Lake Sammamish	5	2004			X						
Lake Sammamish	5	2004									X**
Lake Sammamish	2	2004								X	

Notes: T = temperature, Hg = mercury, FC = fecal coliform bacteria, DO = dissolved oxygen, NH3 = ammonia, B-IBI = benthic index of biologic integrity, P = phosphorus

*Was Category 5 in 2004, downgraded to Category 2 in 2008.

**Tissue – PCB

Water Quality and NPDES Permit Holders

Erosion control features to prevent water quality issues during construction of the Sammamish Community and Aquatic Center

The Ecology Permit Reporting and Information System (PARIS) database was reviewed for a list of NPDES permit holders within Sammamish. In addition to the City's Phase II NPDES MS4 permit, there are 39 sites that have active Construction Stormwater General Permits (CSGP) in 2016. These would include Site Development Permits that have site disturbances greater than 1 acre.

The PARIS database provides information regarding each site's permit, discharge monitoring reports (DMRs), permit violations, inspections, and enforcements. Permit violations include administrative violations such as failure to submit timely DMRs and benchmark exceedances for pollutants of concern. Only 8 of the 39 sites with active CSGPs had no permit violations, and the remaining 31 sites had between 1 and 54 violations. In many cases, the violations were administrative, but benchmark exceedances were also reported for turbidity and pH, common construction site stormwater issues that are attributed to earth and cement work. This information illustrates how it is not uncommon for construction sites to discharge pollutants to receiving waters in Sammamish, and that there is a need for enforcement and other mechanisms to ensure that the construction industry follows through on permit conditions.

Why should noxious weeds be considered in a stormwater management program?

Noxious weeds are commonly found in stormwater management facilities and noxious weed management needs to be part of long-term maintenance of vegetated facilities so that these weeds don't spread and impact other natural ecosystems.

Purple loofestrife, a common noxious weed.

What are some of the threats to natural resources?

Noxious Weeds

King County's noxious weed program conducted an assessment of noxious weeds in Sammamish in 2012. Results were mapped in the County GIS system (King County 2013). There are nine Class B designated noxious weeds identified in Sammamish are listed in Table 3-7. Class B noxious weeds are non-native species whose distribution is limited to portions of Washington State. The Washington State Noxious Weed Board or a County Noxious Weed Board can designate a Class B noxious weed for mandatory control (Washington State Noxious Weed Control Board 2016). As shown in Table 3-7, noxious weeds are commonly found associated with aquatic resources (wetlands, lakes, and streams) and constructed stormwater drainage facilities. Operations and maintenance of facilities with open water or open space require the management of noxious weeds, and as LID facilities are constructed more frequently on a City-wide basis, the need for noxious weed management may need to be part of the long-term maintenance of these vegetated stormwater facilities.

Noxious Weed Management

The King County Noxious Weed Control Board requires control of garden loosestrife (Class B noxious weed in Washington). The Board reports that small areas of garden loosestrife seedlings can be dug up, and larger isolated plants can be removed by hand if care is taken to remove all rhizomes. The Board does not recommend only pulling this plant because it breaks off easily, leaving rhizomes behind to regrow. Garden loosestrife has been covered with black plastic on at least one site on Lake Sammamish. This can be effective for controlling seedlings or on very small populations. It can also serve as a suppression tool where herbicides are not desired.

King County reports that the aquatic formulations of glyphosate, triclopyr, and imazapyr are effective on garden loosestrife. No biological control agents are presently known and no research to discover biological control agents is currently being conducted.

Table 3-7 Summary of noxious weed inventory in Sammamish

Noxious Weed	Area (acres)	Locations Identified in Sammamish
Brazilian elodea	0.05	Shorelines
Garden loosestrife	6.16	Shorelines, streams, wetlands
Meadow knapweed	<0.01	Parks
Orange hawkweed	<0.01	Road right-of-way
Policeman's helmet	2.12	Forest lands, residential, streams
Purple loosestrife	1.46	Drainage ponds, lakes, light industrial, open space, residential, road right-of-way, shorelines, streams, wetlands
Spotted knapweed	0.12	Parks, road right-of-way
Tansy ragwort	3.11	Drainage ponds, lakes, land under development, open space, parks, pastures, residential, road right-of-way, streams
Yellow hawkweed	0.33	Parks, road right-of-way
Grand Total	**13.35**	

Mud Snails

New Zealand mud snails have been identified in several Puget Sound area streams, however, they have not been found in Sammamish stream channels yet. New Zealand mud snails are an invasive species that can dominate river and lakebed habitat, outcompeting native aquatic snails and insects, leading to implications for fish and other species that rely on these insects as their food source. Regional efforts are being made to stop the spread of mud snails.

Evans Creek HDPE pipe outfall energy dissipation

244th Avenue NE stormwater facility

What types of stormwater infrastructure does the City own and operate?

The built infrastructure that conveys and treats surface and stormwater runoff in Sammamish is a mix of open ditches, closed pipes, culverts, streams, and a variety of stormwater facilities that have been installed prior to and post-Sammamish incorporation. Stormwater conveyance facilities including catch basins, manholes, and ditches. The City's stormwater system was inventoried and mapped in GIS in 2014, and a summary of the data is provided below. Known system components include approximately:

- 427 publicly owned stormwater facilities (detention and water quality facilities)
- 120 privately owned stormwater facilities
- 218 miles of stormwater conveyance pipe
- 8,120 structures (e.g. catch basins)
- 64 miles of open ditches and swales

Stormwater Facilities

According to Sammamish GIS records, at least 174 of the City's stormwater ponds were built in 2000 or before, and 52% of those were constructed prior to 1990 (Figure 3-7). Rapid growth in Sammamish occurred in the 1990s prior to incorporation, about the same time that stormwater management regulations were rapidly changing to address stormwater impacts on small stream channels and aquatic habitat conditions. As stormwater management techniques have evolved, so have the stormwater BMPs implemented in Sammamish. Figure 3-7 shows the types and numbers of stormwater facilities in Sammamish and the period of installation. Facility locations are shown in Figure 3-8.

As the City's stormwater treatment facilities age, there could be a greater need for additional maintenance. Additionally, these facilities could be potentially retrofitted to achieve enhanced stormwater benefits that are in line with current regulations that require improved design standards. These retrofits would include using continuous flow modeling and/or all known available and reasonable technology (AKART) standards for water quality treatment. An appearance to mimic more natural open water bodies and wetland conditions could also be considered.

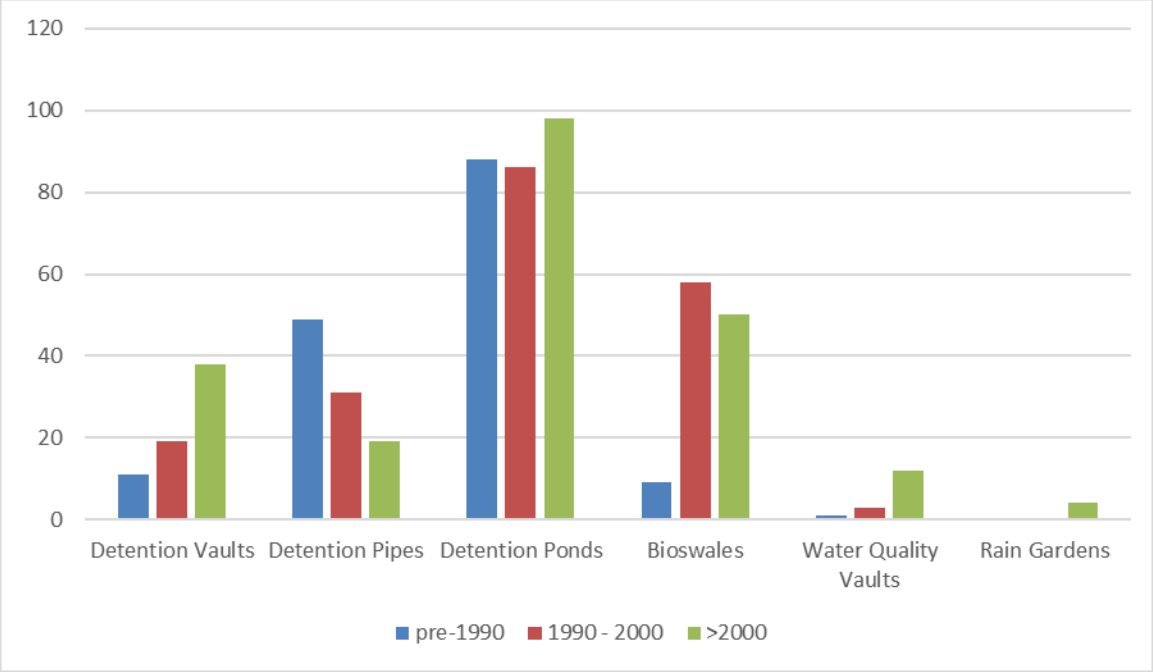

Figure 3-7 Types and numbers of stormwater treatment facilities in Sammamish and time period of installation

Exhibit 2

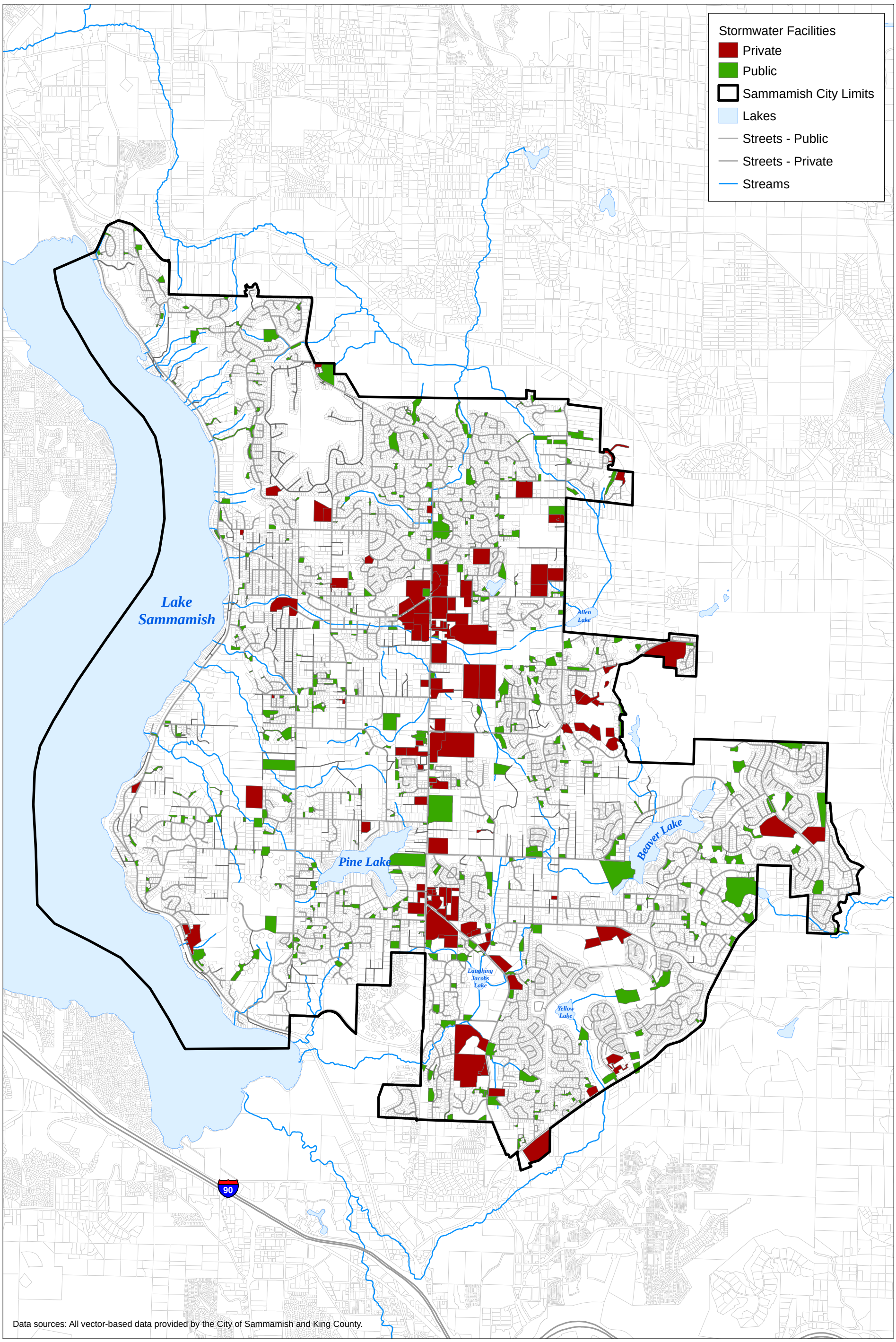

City of Sammamish Washington

Windward environmental LLC

N

0 0.5 1 Miles

0 2,000 4,000 Feet

Figure 3-8. Stormwater Facilities

DRAFT

Prepared by mikey, 3/24/2016, W:\Projects\City of Sammamish Stormwater Comp Plan\Data\GIS\Maps and Analysis\60-69 Water quality and detention facilities.mxd

Stormwater Conveyance

Example of ditch and culvert stormwater conveyance in Sammamish

The type of conveyance infrastructure generally matches the level of development in Sammamish. Rural areas primarily still have ditch systems to convey roadway runoff, whereas newer developments have curb, gutter and sidewalk, and stormwater pipe systems that convey stormwater. The types of pipe material used in Sammamish and the general date of installation is shown in Figure 3-9. Figure 3-10 shows locations and types of Sammamish stormwater conveyance infrastructure recently inventoried. In the past decade, there has been a shift toward synthetic-based materials, rather than metal and concrete as shown in Figure 3-9. Corrugated metal pipes (CMP) are known to have corrosion issues under certain conditions, and the condition of old pipes constructed with this material is often poor. Over 75% of the CMP pipes in Sammamish were installed prior to 1990.

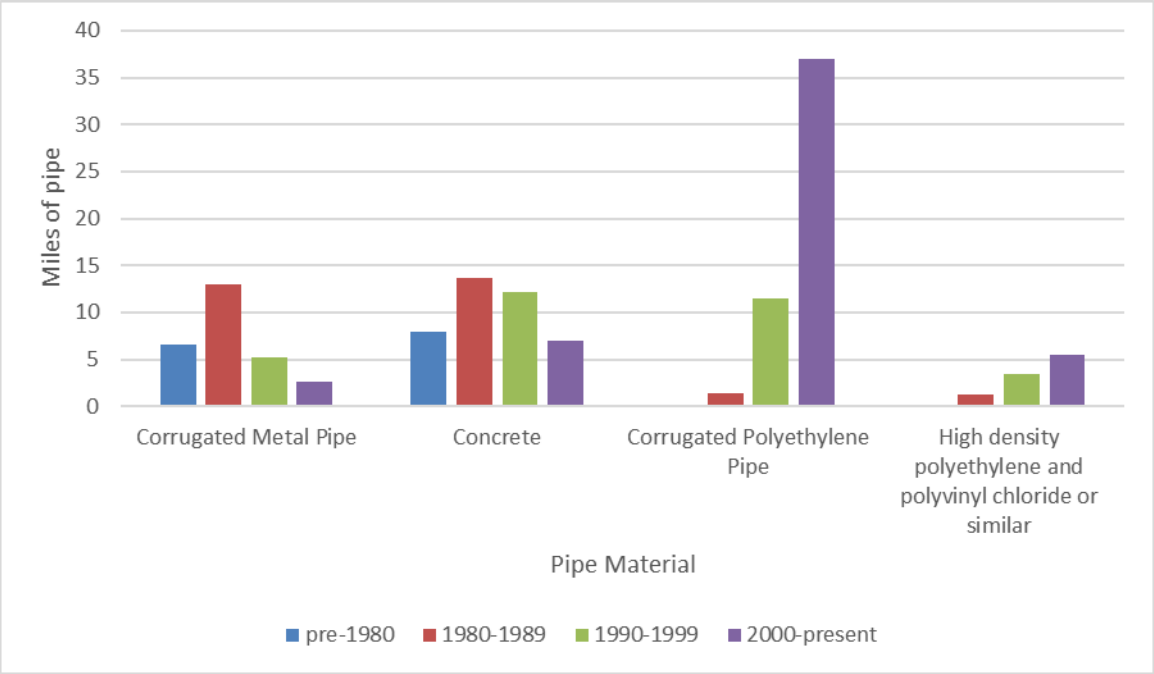

Figure 3-9 Lengths of pipe material and decade installed

Exhibit 2

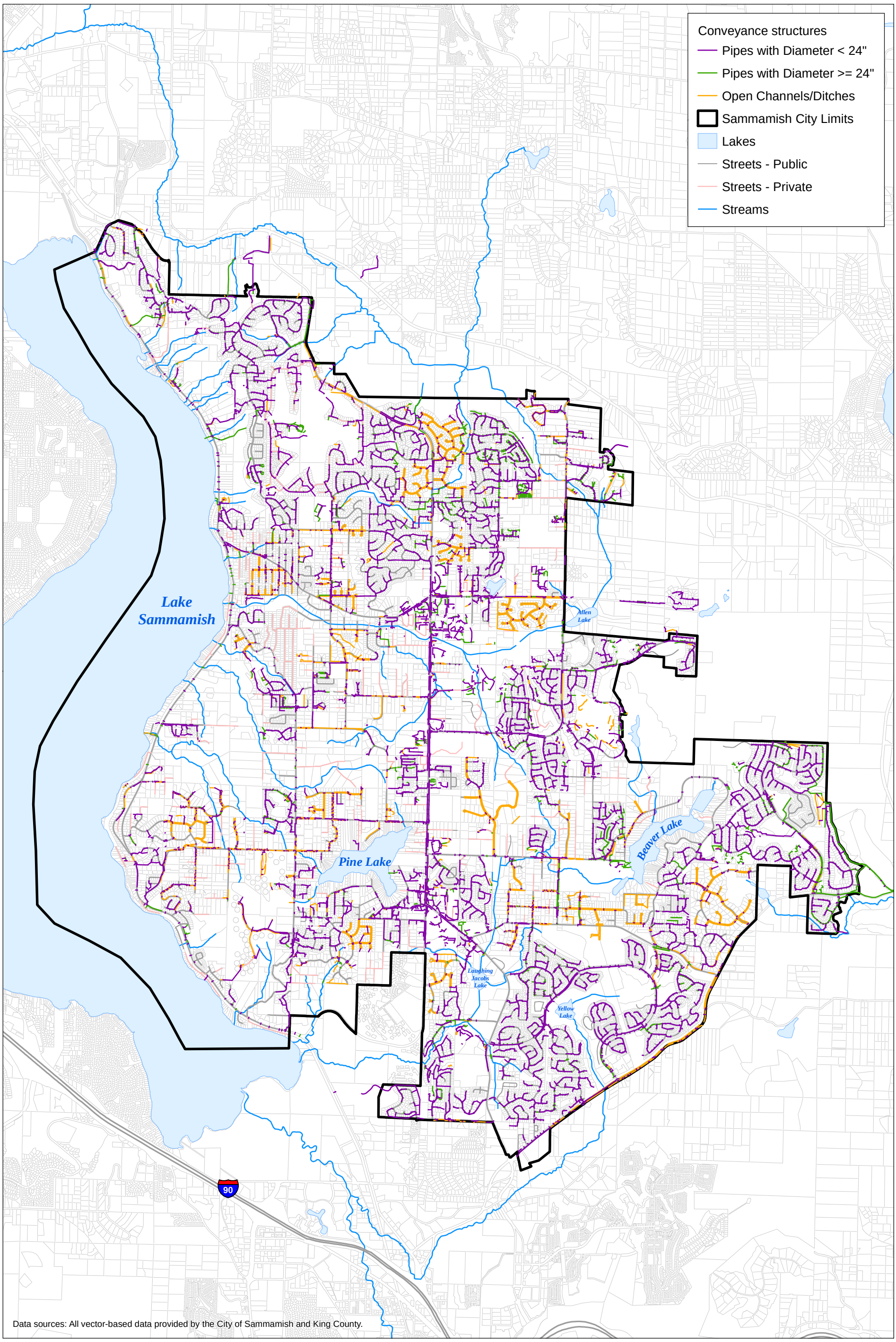

City of Sammamish Washington

Windward environmental LLC

N

0 0.5 1 Miles

0 2,000 4,000 Feet

Figure 3-10. Conveyance System

DRAFT

Prepared by mikey, 4/19/2016, W:\Projects\City of Sammamish Stormwater Comp Plan\Data\GIS\Maps and Analysis\6077 Conveyance structures.mxd

SECTION 4– EXISTING STORMWATER MANAGEMENT PROGRAM

Stormwater management in Sammamish is accomplished through the planning and implementation of multiple program efforts that involve coordination with staff in most other areas of City government as well as neighboring jurisdictions. It also involves management of outside resources such as grants and volunteers that help meet the City's stormwater goals.

In its mission to promote public health, safety, and welfare, and to protect the environment by managing surface and stormwater to reduce negative impacts, the Sammamish stormwater management program implements the following program elements:

- Customer Service and Public Involvement
- Stormwater-related Code Development
- Stormwater Development Review and Code Compliance
- Construction Inspection
- Infrastructure Inspection
- Operations and Maintenance
- Illicit Discharge Detection and Elimination (IDDE)
- Water Quality Monitoring
- Education and Outreach
- Local and Regional Coordination
- Capital Drainage Improvement Projects

The City's maintenance and operations center incorporated many LID features including a green roof (above) and infiltration pond (below)

City staff respond to stormwater-related inquiries from customers every year. Many of these inquiries trigger stormwater improvements.

Example of dead trees in a wetland that has been impacted by beaver activity

How is customer service and public involvement accomplished?

City staff respond to an average of over 100 inquiries from customers per year not related to the review of new development projects. Inquiries range from site-specific drainage issues that are sometimes private issues, to questions about the application of individual surface water fees.

What types of surface water or drainage problems have been reported?

An evaluation of drainage inquiries, or "Citizen Action Requests," received in Sammamish between 2001 and 2015 shows the range of issues reported by citizens (Table 4-1). Figures 4-1 and 4-2 show the number of inquiries by year and month to show seasonality and annual variability.

Table 4-1 Range of drainage citizen action requests

Type of Complaint	Number of Complaints
Beavers	11
Drainage	151
Erosion	7
Facility maintenance	54
Flooding	24
Other	98
Water Quality	14
Grand Total	**369**

Drainage inquiries in the "other" category were primarily associated with inquiries related to stormwater rates or land classifications. In general, the drainage requests received were relatively minor. Stormwater facility maintenance calls included calls about facility fences, animals in the enclosures, or too little or too much vegetation (in the opinion of the caller).

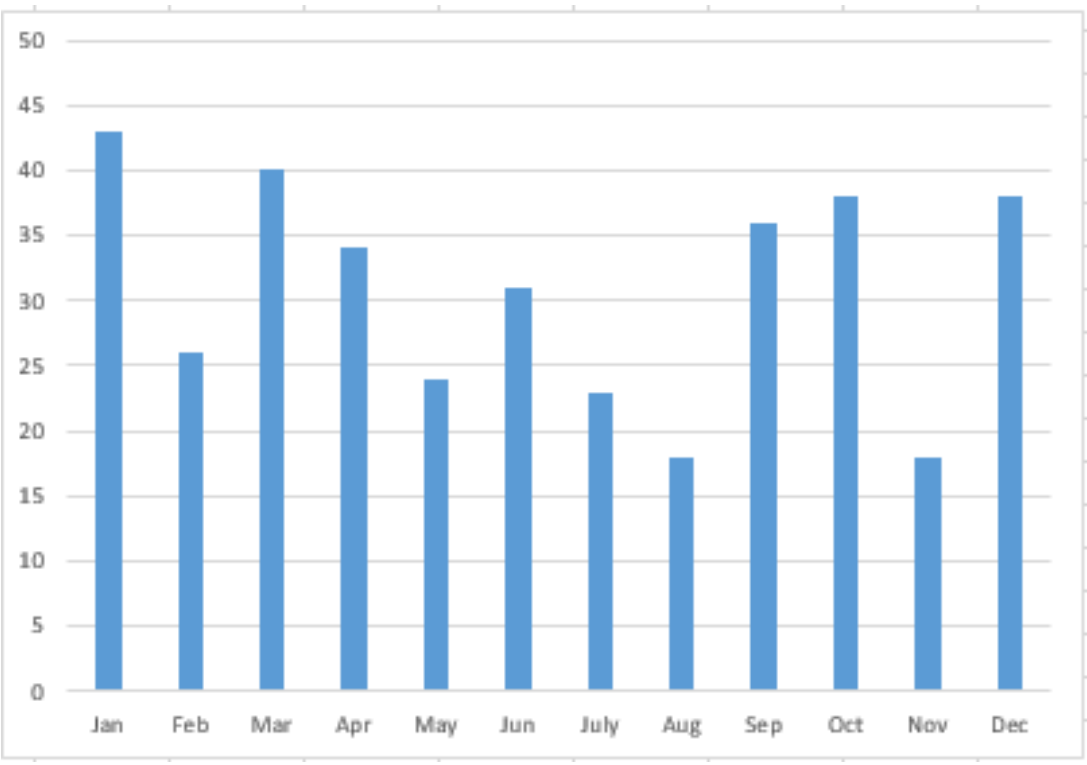

Figure 4-1 Summary total of drainage citizen action requests received each month between 2001 and 2015

Example of groundwater seepage

Calls also included reports on sediment and erosion control at new developments and groundwater seepage concerns. Beavers were a problem at several stormwater pond facilities, and other locations where residents often took care of the situation themselves but called to report the problem. In a review of the inquiries, drainage ditches are a common topic. Some callers have had concerns over maintenance or flooding, and others have wanted permission to fill in the ditches to gain parking space or other property amenities.

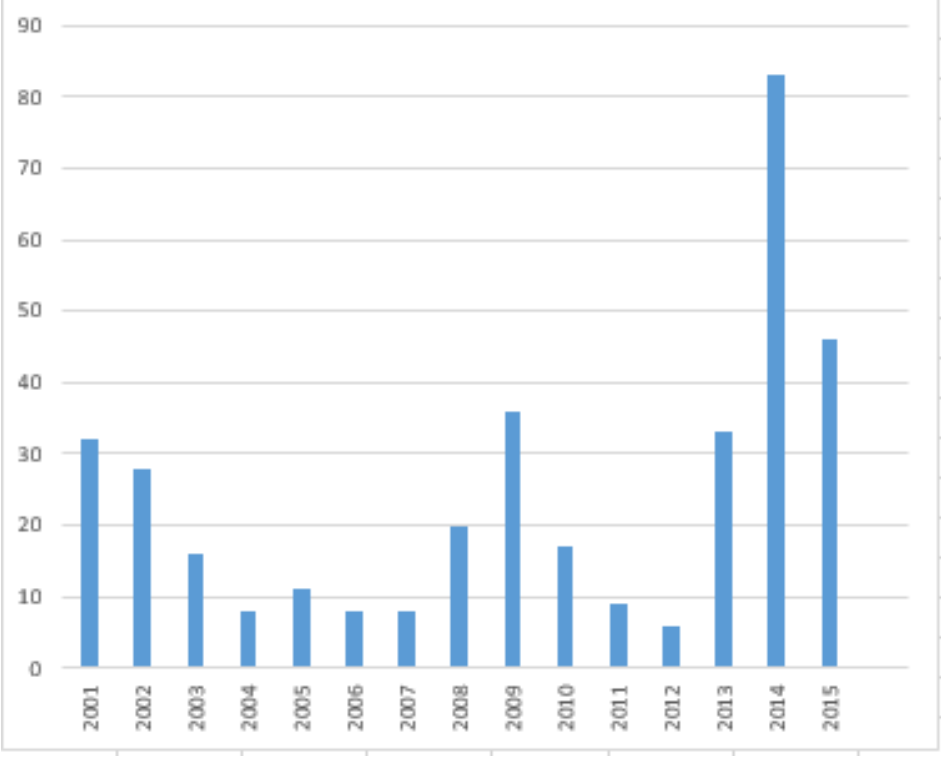

Figure 4-2 Summary of drainage citizen action requests between 2001 and 2015

How does the City comply with and implement stormwater regulations?

As outlined in Section 2, there are a variety of regulations and permits under which the City stormwater program both enforces and fulfills compliance obligations. The NPDES Phase II Permit guides much of the City's stormwater program, because it is an all-encompassing permit that touches all aspects of stormwater management. Some permit requirements are passed on to residents and businesses within the City through stormwater development standards and permit-driven ordinances.

The first NPDES Phase II Permit (effective 2007 through 2012) resulted in significant changes in how the City conducted its stormwater management program. The current permit has additional requirements, as well as modifications to previous requirements and a phased implementation period. The primary approaches and modifications to the current NPDES Phase II Permit are the requirements for LID for new development, and redevelopment, monitoring, and area thresholds for which stormwater controls are required.

The permit requires adoption of a new stormwater management manual by December 31, 2016, that is equivalent to Ecology's 2014 Stormwater Management Manual for Western Washington (Ecology Manual). The Ecology Manual incorporates LID standards and criteria. The City will also need to review and update development-related codes to allow for and be consistent with LID principles and BMPs. This will require a city-wide code review and update effort. Additionally, it may be necessary to develop tools that developers and city reviewers can use to efficiently determine when and where LID is not appropriate.

The City has opted to pay into the regional monitoring fund, rather than develop its own monitoring program. The result is a budgetary increase for water quality monitoring, but no labor resources needed to implement a city-specific program.

The City will adopt a new Stormwater Management Manual in 2016. This is one way it implements stormwater regulations.

Rain garden at King County Library, Sammamish Branch

Example of new development under construction. City staff review permits for compliance with stormwater codes and standards, and conduct construction site inspections.

There are many other regulations that City stormwater staff deal with in the management of surface and stormwater, including those discussed in Section 2.

How does the City implement stormwater development review and code compliance?

City stormwater staff review development permits for compliance with stormwater codes and standards. Currently the City uses a bifurcated approach, with the 2009 King County Surface Water Design Manual (2009 KCSWDM) and the City of Sammamish Surface Water Design Manual Addendum, which outlines minor changes that the City opted to make when adopting the 2009 KCSWDM. For site development that disturbs 1 acre or more, the 2009 KCSMDM design standards are applied. For site development that disturbs less than 1 acre, the 1998 KCSWDM design standards are applied as outlined in the addendum.

In addition to the 2009 KCSWDM, the City has prepared flow control and water quality applications maps that depict the types of treatment standards that apply in different areas of the City. For instance, in frequently flooded areas, more stringent flow control standards are required from new developments. The entire City is subject to fairly stringent flow control standards in order to protect small streams from erosion (Level 2 flow control) and prevent flooding (Level 3 flow control). Stormwater management techniques to meet these standards include BMPs such as stormwater detention ponds, vaults, infiltration facilities, and low impact development features such as bioretention.

Areas that discharge to phosphorus-sensitive lakes require additional water quality controls and considerations. The flow control and water quality applications maps are shown in Figures 4-3 and 4-4.

In 2015, 351 plans were reviewed for new development and redevelopment sites.

Exhibit 2

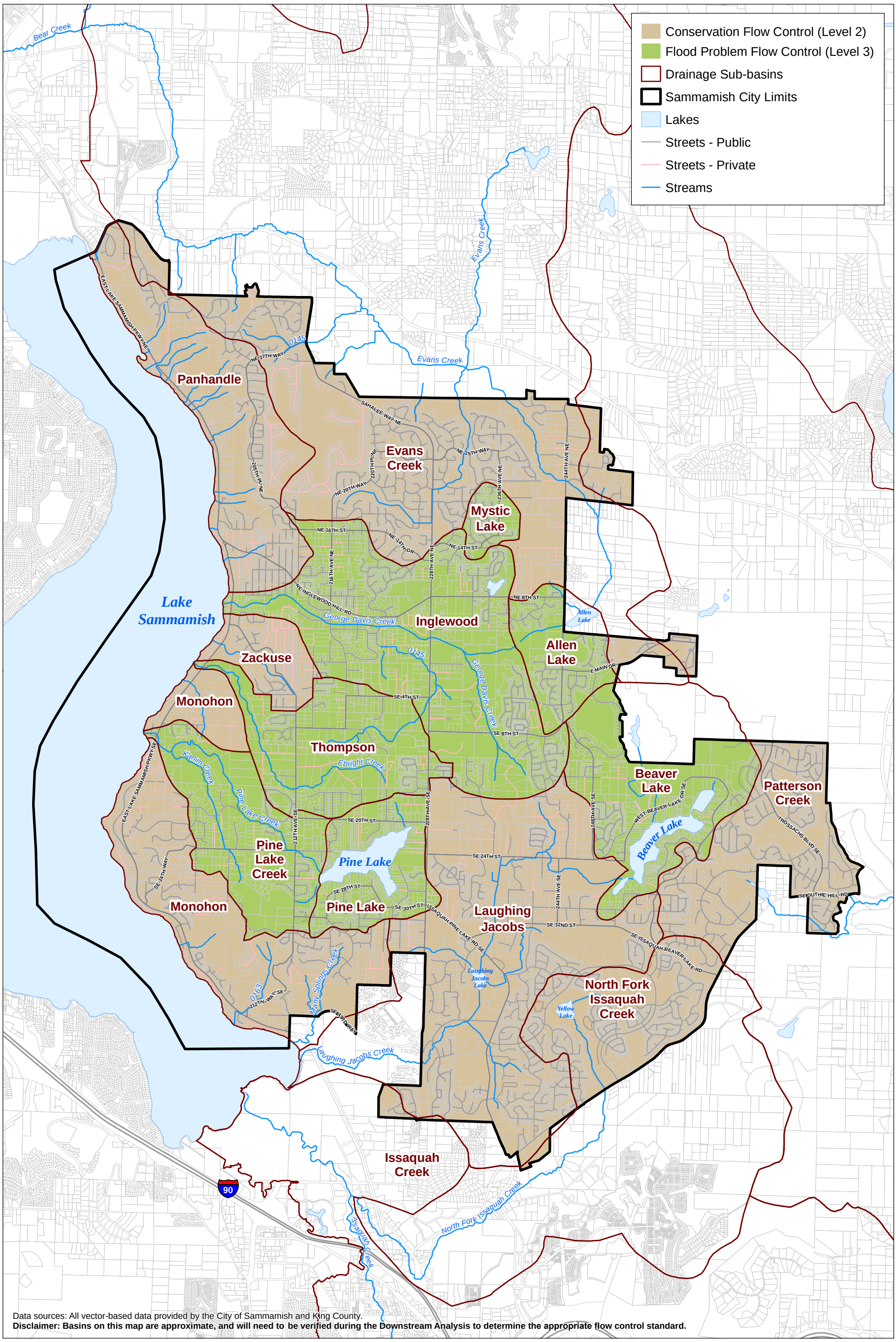

Data sources: All vector-based data provided by the City of Sammamish and King County.
Disclaimer: Basins on this map are approximate, and will need to be verified during the Downstream Analysis to determine the appropriate flow control standard.

City of Sammamish Washington

Windward environmental LLC

N

0 0.5 1 Miles

0 2,000 4,000 Feet

Figure 4-3. Flow Control Application Areas

DRAFT

Prepared by mikey, 3/24/2016, W:\Projects\City of Sammamish Stormwater Comp Plan\Data\GIS\Maps and Analysis\6325_Flow Control Map.mxd

Exhibit 2

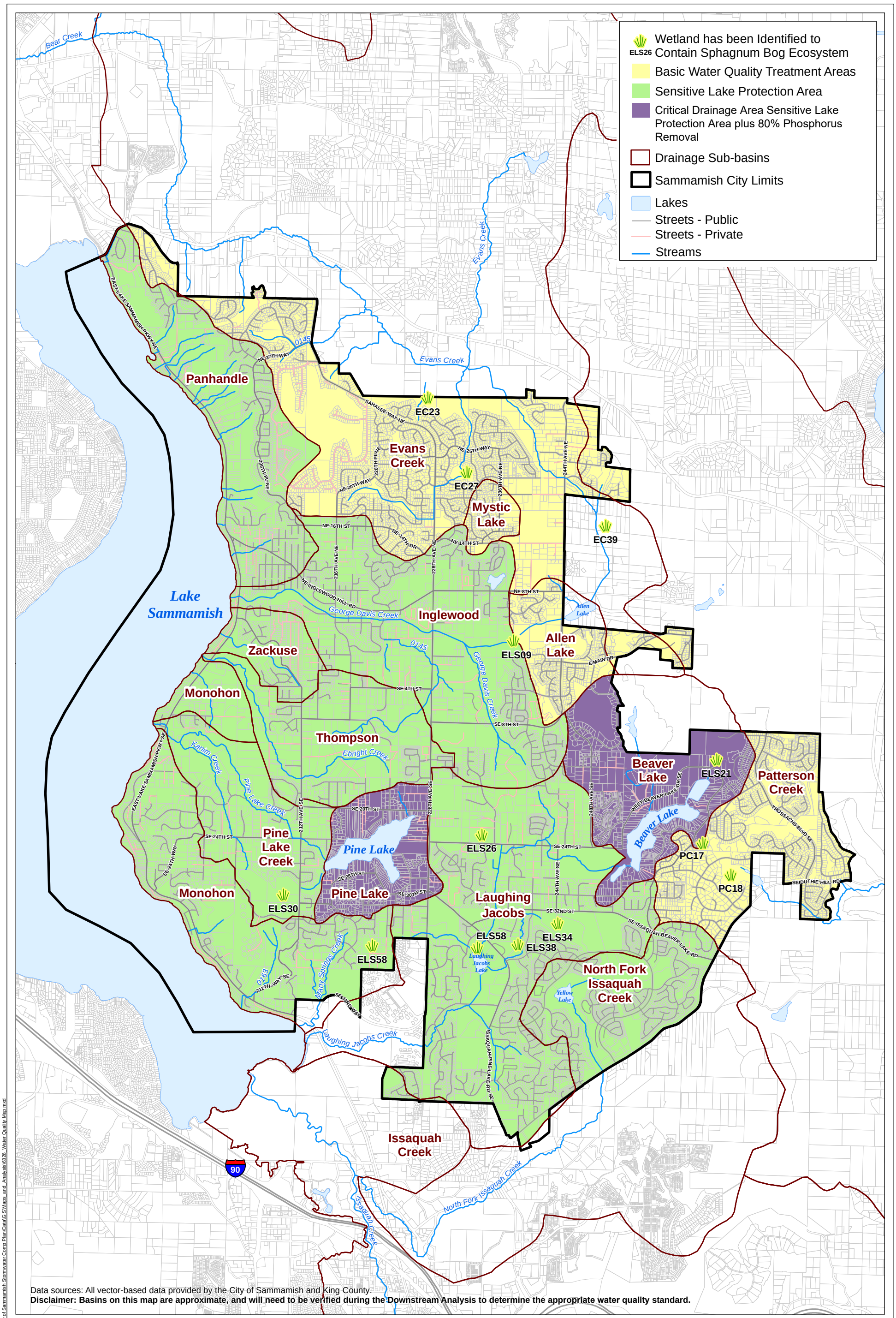

City of Sammamish Washington

Windward environmental LLC

N

0 0.5 1 Miles

0 2,000 4,000 Feet

Figure 4-4. Water Quality Treatment Application Areas

DRAFT

Prepared by mikey, 3/24/2016, W:\Projects\City of Sammamish Stormwater Comp Plan\Data\GIS\Maps and Analysis\6\26 Water Quality Map.mxd

What are the primary operations and maintenance functions?

Operations and maintenance of City-owned stormwater facilities is overseen jointly by the Operation and Maintenance Manager and the Senior Stormwater Program Manager. It is accomplished by City inspectors, maintenance crews, and contractors.

The types of stormwater facilities and infrastructure inspected and maintained include:

- Stormwater ponds (retention/detention and water quality)
- Stormwater tanks and vaults (typically underground)
- Vegetated swales (bioswales and bioinfiltration facilities)
- Roadside ditches
- Stormwater conveyance pipes
- Catch basins and manholes
- Stormfilters (catch basin and manhole cartridges)
- Sand filters
- Infiltration facilities
- Sedimentation ponds
- Bioretention systems

Maintenance activities at these facilities include (1) vegetation management, (2) sediment and debris removal, (3) cartridge replacement, (4) filtration material replacement (sand filters, bioswales), (5) infrastructure replacement (structures such as catch basins, manholes, inlets, and outlets), and (6) grading and stabilization to repair erosion.

SE 8th Street stormwater pond

Manhole with cover removed

Roadside ditch in need of maintenance. Vegetation is blocking inlet to pipe.

Example of energy dissipation to prevent erosion. This technique is used for both construction and permanent stormwater controls

Construction Site Inspection

In addition to stormwater site plan review for proposed development activities, City staff inspect sites that have a high probability of sediment transport off-site prior to clearing and construction. During construction, City inspectors verify proper erosion and sediment control BMPs, and following completion of construction, inspectors ensure proper installation of permanent stormwater controls.

The City uses a progressive enforcement procedure for non-compliance. The current NPDES Phase II Permit requires that inspection of permanent stormwater facilities continue every 6 months until 90% of the lots associated with a single development are constructed.

City-owned Facility Routine Inspection and Maintenance

Sammamish owns and operates over 427 stormwater facilities. The City contracts some of the maintenance work to a private contractor. All of the inspections are conducted by the City's Stormwater Inspector, and the majority of maintenance is conducted by the City crews.

The City has over 8,000 structures that require inspection and cleaning, if deemed necessary. The current Phase II NPDES Permit requires that all City-owned catch basins, manholes, and inlets be inspected prior to August 1, 2017, and every two years thereafter. The City has a contract with a vactor company to inspect and clean catch basins, manholes, and structures associated with other stormwater facilities. The budget for this contract will need to be augmented in order to meet increased inspection and vactor cleaning frequency required by the NPDES permit and future annexations.

Private Facility Inspection

There are 120 privately owned stormwater facilities (i.e., ponds, tanks, and associated infrastructure) associated with commercial, educational, and recreational entities in Sammamish. City staff inspect these facilities on an annual basis, and if deficiencies are identified, owners/operators are informed of the deficiencies in writing and given a timeframe to correct the issues and provide evidence that they were corrected.

Stormwater fee discounts are provided to entities that properly maintain their facilities.

Example birdcage structure used to prevent large debris from getting into and clogging stormwater pipes. City crews inspect and maintain these facilities

Non-routine Facility Operations and Maintenance

Extreme weather events and unanticipated flow conditions can result in the need for emergency repairs or cleaning to prevent flooding or damage to infrastructure or private property. The City conducts spot checks of facilities and problem areas after major storm events (greater than 24-hour, 10-year recurrence interval rainfall). If spot checks indicate the need for emergency repairs, appropriate action is taken. The City maintains an emergency on-call contract with a vactor company to provide emergency vactor services as needed.

Street Sweeping

Sammamish hires a contractor to conduct street sweeping at a frequent interval between October and December (three times/week), and less frequently the rest of the year. Street sweeping removes debris (leaves and sediment) from the road that could otherwise end up in catch basins and stormwater infrastructure, increasing the need for structure cleaning. Currently, the streets that are swept include arterials and streets with curb and gutters and roadside ditches.

How does street sweeping benefit stormwater management?

Street sweeping helps reduce the amount of pollutants that get into the stormwater system and keeps pipes and catch basins cleaner and able to convey flow.

LID facilities may require a greater degree of landscaping skills to maintain the vegetated components than is typically needed for traditional stormwater facilities.

Vegetation Management

Many stormwater facilities and open conveyance systems have a vegetated component that is either purposeful (grass or other vegetation that has a specific filtering or pollutant uptake function), or accidental (plants take root in exposed soil).

In either case, functionality can be impaired by lack of maintenance. The City manages vegetation at stormwater ponds through annual mowing (some of this is performed by a private contractor). Roadside ditches that convey stormwater runoff also require vegetation maintenance and trash removal. City street crews are responsible for maintenance of road-side ditches.

LID BMPs, such as rain gardens, Filterra™ tree boxes, and bioinfiltration swales, are constructed with a variety of plants that require differing maintenance techniques and in some cases, irrigation. Currently, vegetation in LID facilities owned by the City are maintained by a contractor.

The current NPDES Phase II Permit emphasizes the use of LID techniques unless proven to be infeasible. As more LID facilities are constructed in Sammamish, a different approach to operations and maintenance will be required, because these facilities generally require a greater degree of landscaping skills than is typically needed for traditional stormwater facilities.

IDDE

The City implements an IDDE program that includes procedures for responding to spills and illicit discharges, locating and removing illicit connections, and assessing potential public or environmental threats posed by illicit discharges to the stormwater system. A hotline is published for residents to report spills or water quality concerns.

What types of water quality monitoring does the City conduct?

The City conducts a variety of water quality and flow monitoring activities of its natural resources and receiving waters for the purposes of (1) establishing baseline conditions to measure improvements, (2) ensuring safe swimming beaches, and (3) monitoring ecological changes.

The City just finished its first year of water quality, ecological, and flow monitoring on Ebright Creek to better understand the relationship between ecological health in Ebright Creek and upstream development activities (48North Solutions 2015). Monitoring included the following parameters:

- B-IBI (Benthic Index of Biologic Integrity)
- Water levels
- Flow
- Temperature
- Turbidity

King County, through its Lakes and Streams Monitoring Group, works with volunteers to collect water quality data at Beaver and Pine Lakes. Physical parameters such as water level, precipitation, temperature, and water clarity have been collected at frequencies ranging from daily to bi-weekly since about 1995. Water samples are also collected between May and October (the growing season) for analysis of phosphorus, nitrogen, chlorophyll, and other parameters to evaluate productivity and indicators of trophic state or potential for algal blooms. Sammamish provides monetary support to King County for this program.

Collecting macroinvertebrate samples

Why monitor water quality?

The primary reason to monitor water quality is to measure changes that help to explain the effects of particular actions, such as treatment technologies, development, or land management practices.

What does the City get out of Ecology's RSMP?

By contributing to the RSMP, the City avoids having to implement a more costly monitoring program itself, and benefits from the data collected by the program that will help further the understanding of regional stormwater practices.

How much does the City contribute to the RSMP?

Currently, the City contributes ~$35,000 annually to Ecology for the RSMP. This compares to $50K-$60K annually for monitoring Ebright Creek alone.

The City through an interlocal agreement with King County also monitors water quality at local swimming beaches during the summer months for fecal coliform bacteria. Beaver Lake, Pine Lake, and Sammamish Landing beaches are all monitored approximately every other week during the summer months. If results exceed certain criteria, beaches are posted for closure until water quality improves.

The City also contributes to Ecology's Regional Stormwater Monitoring Program (RSMP) through its NPDES Phase II Permit and participates in a municipal caucus related to the program. The amount Sammamish contributes is based on population, so with the increase in population due to annexation, this contribution is expected to increase in the future. The water quality monitoring fund is used for status and trends monitoring to evaluate water quality in small streams and nearshore marine areas, stormwater program effectiveness monitoring, and implementation of the Source Identification Information Repository (SIDIR) program. The City does not have any streams or stormwater facilities included in the regional water quality monitoring program.

If the City opted to conduct its own monitoring, rather than contribute to the RSMP, it would be required to do the following:

- Conduct wadeable stream water quality, benthos, habitat and sediment chemistry monitoring according to an Ecology-approved Quality Assurance Project Plan (QAPP) at 12 monitoring locations.
- Conduct stormwater discharge monitoring at three discharge monitoring locations, determined by Ecology, to evaluate stormwater management effectiveness. Flow monitoring gauges would also be required at the three locations.

Prior to initiating the RSMP, Ecology required larger municipal NPDES Permittees (Phase I Permit holders) to conduct water quality monitoring. Monitoring was onerous and expensive for individual jurisdictions to implement on their own. The RSMP was established to provide a more cost effective method of gaining regional data.

How is stormwater education and outreach implemented?

Watershed education outreach event

The behavior of residents and businesses can greatly affect stormwater conveyance and water quality in Sammamish. The stormwater system is a mix of private and public infrastructure that is both above and below ground. The actions taken on private property and bordering City rights-of-way can greatly affect runoff characteristics. For this reason, education and outreach is a very important component of the City's stormwater program. It is also required to be in compliance with the NPDES Phase II Permit.

The City conducts a variety of targeted public education events, ranging from posting educational material and helpful advice on the City's website to public outreach events at the local farmer's market and other City events. In 2014 and 2015, the City conducted over 60 public education and outreach activities. Sammamish also participates in the regional Stormwater Outreach for Regional Municipalities (STORM) group, a collective group of NPDES Phase I and II cities and counties that share education and outreach resources, including implementation of the Puget Sound Starts Here (www.pugetsoundstartshere.org) campaign.

The types of education and outreach activities currently being conducted and offered by Sammamish include:

- Web-based outreach materials for pollution source control (e.g., car care, yard care, waste disposal, pet waste disposal, pool and spa care, and drainage)
- The *Kokanee Classroom Challenge,* a program teaching elementary students pollution prevention with an emphasis on saving the Lake Sammamish kokanee. Over 759 elementary school students participated in 2015.
- Car wash kits
- Opportunities to volunteer (such as storm drain marking)
- Information on LID
- Stormwater protection articles in the City's monthly newsletter
- Site visits to investigate citizen action requests frequently include on-site education of local residents.

Does the City coordinate with other jurisdictions on stormwater-related issues?

City staff participate in regional forums to stay current on innovative techniques, learn approaches of other jurisdictions, and collaborate on topics of joint interest.

Watersheds cross jurisdictional boundaries, so comprehensive management of water resources within those drainage basins requires cross-jurisdictional coordination and outreach. Sammamish is located at the headwaters of several small drainage basins whose boundaries extend to other jurisdictions. Examples are Laughing Jacobs and North Fork Issaquah Creeks, for which the outlets are in Issaquah, or tributaries to Patterson and Evans Creeks in unincorporated King County.

The Kokanee Work Group, which consists of regional representatives from King County and cities that border Lake Sammamish, is an example of regional coordination in order to fulfill a common goal of preserving and enhancing habitat for Lake Sammamish kokanee salmon.

City stormwater staff participate in other regional stormwater and watershed forums, including:

- Watershed Resource Inventory #8 (WRIA 8) Planning
- Stormwater Outreach for Regional Municipalities (STORM)
- NPDES Permit Coordinators Group
- Local Jurisdiction Stormwater Monitoring Caucus
- Regional Operations and Maintenance Program (ROADMAP)
- Kokanee Work Group

Participation in these groups is a very effective means to learn how other jurisdictions are managing stormwater and NDPES Phase II Permit requirements, new and innovative stormwater BMPs, mistakes that are avoidable, and future permit or regulatory requirements that could affect Sammamish.

How are stormwater capital projects funded and implemented?

Stormwater staff recommend and implement elements of the city-wide capital improvement program (CIP) that deal with stormwater issues. Potential projects are identified by the City council, City staff, or residents. Projects are evaluated and may be recommended for inclusion in the CIP depending on specific criteria, including availability of funds, cost, severity of problem, or opportunities for capitalizing on external partnerships.

$1.3M is allocated annually for stormwater CIPs.

Approximately $1.3M is allocated annually to stormwater CIPs as well as stormwater components of transportation projects. System development charges (SDC's) are applied toward new stormwater infrastructure and facilities.

What are the stormwater staffing levels?

The Surface Water Management Fund Organization Chart (Figure 4-5) shows positions within the Public Works Department that are supported by the Surface Water Management Budget. From 2013 to 2016 full-time equivalent (FTE) employees increased slightly from 10.18 FTE to 10.88 FTE (Table 4-2). Within these positions, only three full-time non-maintenance positions provide one hundred percent service to the Stormwater Management Program. They include the Sr. Stormwater Program Manager, the Stormwater Technician, and the Stormwater Inspector. Other staff funded under the Surface Water Management Fund provide stormwater program related work as directed by their managers.

Current population in Sammamish is nearly 60,000. Other similarly sized cities maintain larger staffing ratios to meet their stormwater management needs. For non-maintenance-oriented job functions, Shoreline (population 55,000) has seven full-time equivalent staff, Marysville (population 63,000) has four full-time equivalent staff, Kirkland (population 84,000) has eight full-time equivalent staff, and Puyallup (population 39,000) has three full-time equivalent staff.

A comprehensive comparison of staffing levels in other jurisdictions should include a review of overall Surface Water Management budget, jurisdictional population, and number and type of infrastructure.

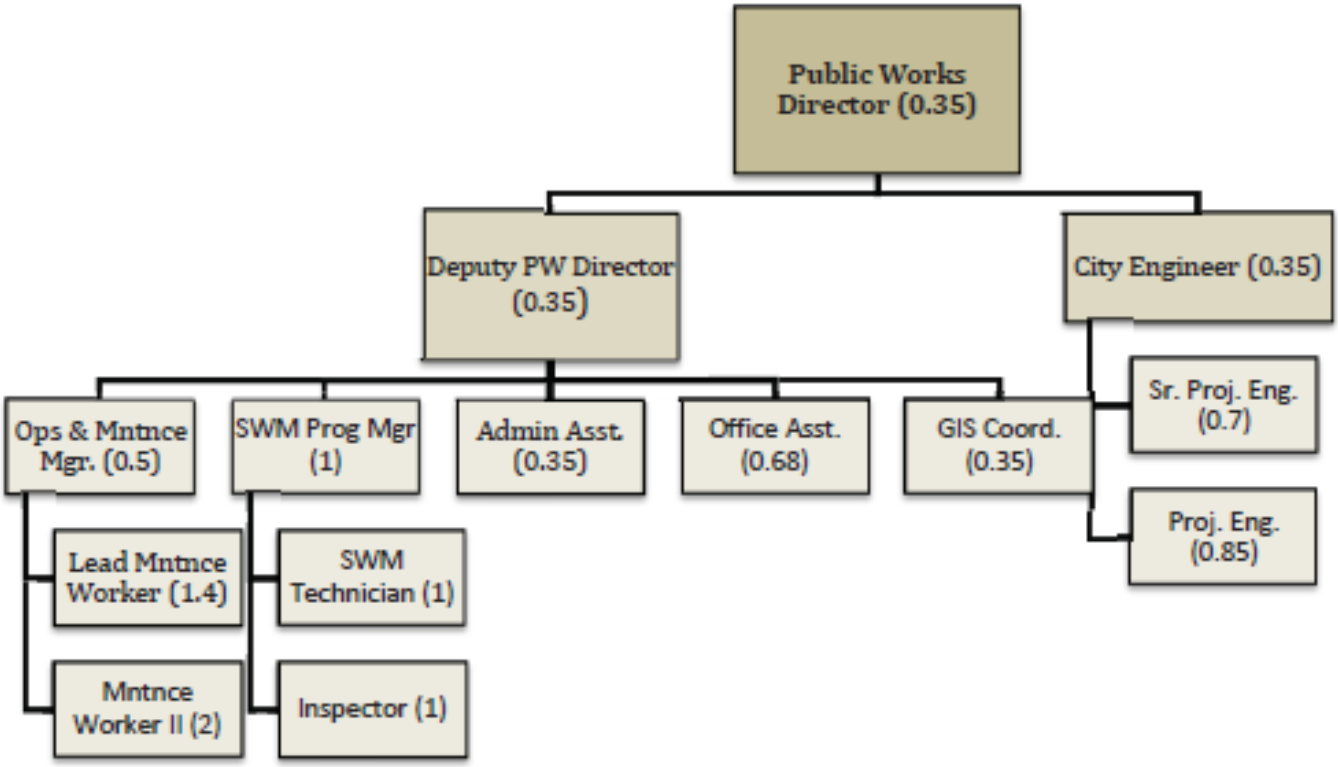

Figure 4-5 Surface Water Management Fund Organizational Chart

Table 4-2 Surface Water Management Fund position history (FTEs) between 2013 and 2016

Position	2013 Actual	2014 Actual	2015	2016
Public Works Director/Assistant City Manager	0.35	0.35	0.35	0.35
Deputy Public Works Director	0	0.35	0.35	0.35
Operation & Maintenance Manager	0.5	0.5	0.5	0.5
Lead Maintenance Worker	1.4	1.4	1.4	1.4
Administrative Assistant	0.35	0.35	0.35	0.35
City Engineer	0.35	0.35	0.35	0.35
S. Project Engineer	0.7	0.7	0.7	0.7
Project Engineer-Development Review	0.5	0.5	0.5	0.5
Project Engineer	0	0	0.35	0.35
Surface Water Program Manager	1	1	1	1
Surface Water Technician	1	1	1	1
GIS Coordinator	0.35	0.35	0.35	0.35
Inspector	1	1	1	1
Office Assistance	0.68	0.68	0.68	0.68
TOTAL	**10.18**	**10.53**	**10.88**	**10.88**

This page left intentionally blank.

SECTION 5 – ANTICIPATED FUTURE CONDITIONS

This Plan in expected to be implemented over the next six to 10 years, through the current NPDES Phase II Permit, and to extend into the next permit cycle. Citywide changes-including new development within the existing City boundary, annexations that increase the City in both land area and population, and changing demographics will affect the stormwater program. Additionally, as stormwater infrastructure ages, more resources will need to be put into repair and replacement.

Trees in Sammamish

Expected NPDES permit modifications in the next Phase II permit cycle can be anticipated from the current Phase I permit requirements. Additionally, as new facilities are designed and constructed, implications of potential changes to weather patterns resulting from climate change should be factored into design considerations. These are all considerations that should be addressed to position the Stormwater Management Program to adjust to future conditions.

Where is development occurring?

Development is occurring throughout Sammamish on undeveloped parcels that allow for greater zoning than what is currently there. Some of these areas do not have formal stormwater infrastructure or adequate conveyance systems in place. For instance, development is currently occurring in the Inglewood Hill and Tamarack neighborhoods, and formal or updated conveyance infrastructure is being planned for these areas using a comprehensive, rather than piecemeal, approach.

Sammamish is expected to grow in population and area, potentially increasing the City's operation and maintenance needs.

Parking lot runoff

As cities grow, the more difficult parcels are the last to be developed. This is true of Sammamish, and future new development will likely occur on more challenging sites that are steep, small, or have other less desirable traits. Stormwater management approaches will require innovative techniques, and more variances to standards will probably be requested. The City should identify approaches to handle these situations.

Is population expected to increase in Sammamish?

Annexations could result in an area increase of approximately 10% and a population increase of 20%. The Klahanie annexation on January 1, 2016, increased the City's population to approximately 60,000 people.

With annexation and new development, the population in Sammamish will grow, and the impact on the existing stormwater program is not known. It is certain that increased development means more impervious surface, which translates into greater and more intense stormwater runoff and potentially greater pollutant discharges to surrounding waterbodies. The City will need to increase its resources to continue to meet the NPDES permit requirements.

Greater operations and maintenance resources will be needed, but there should also be a commensurate increase in revenue to partially off-set costs. The City should assess the future impacts of an aging infrastructure, the unknown condition of existing infrastructure in the newly annexed areas, and on-going surface and stormwater problems.

What are the expected regulatory changes?

As discussed elsewhere in this Plan, regulatory changes will undoubtedly occur over the implementation period of this Plan. In the previous two decades, stormwater management approaches have changed significantly in the Puget Sound region, and can be expected to continue changing as more is learned about current LID techniques, and new technologies are identified. Regulatory requirements tend to become more onerous, not less, and it is likely that the next NPDES Phase II Permit will follow the NPDES Phase I Permit; it could require that permittees begin to retrofit existing impervious surfaces for which no stormwater treatment currently exists. The current NPDES Phase I Permit, for which larger cities and counties are permittees, requires that Phase I permittees implement structural stormwater controls that prevent or reduce impacts on waters of the state.

Example of curb cuts and porous concrete stormwater retrofit on 233rd Avenue NE

The current permit has taken a first step in this direction by establishing lower thresholds for which redevelopment projects must add stormwater treatment for new and existing impervious surfaces. Additionally, Ecology has been encouraging stormwater retrofit through grant awards to jurisdictions that propose stormwater retrofit projects, particularly projects that incorporate LID techniques. It would be worthwhile for the City to identify a stormwater retrofit strategy ahead of requirements, and potentially take advantage of grant-funded opportunities as they arise.

What about the City's stormwater infrastructure?

Sammamish is now 16 years old, having inherited much of its stormwater infrastructure and system from King County in 2000. In 2013, over 350 stormwater facility signs were purchased and installed to clearly identify the City as a contact should there be a problem with the facility.

Much of the major development on the Sammamish plateau occurred in the early to late 1990s, and stormwater infrastructure that was put in place at the time is approaching an age of 20 to 30 years. Other jurisdictions are starting to evaluate the condition of stormwater pipes through closed circuit television (CCTV) video inspection. This can be a very useful tool to not only identify pipe conditions, but also to identify improper connections or sources of illicit discharges. Pipe condition rating systems are used to schedule immediate repairs or follow-up evaluations as far out as 10 years. This information is being used in the overall management of stormwater assets, and helps program budgetary needs in the future. The City should consider conducting pipe condition assessments on its pipes. Pipe cleaning and illicit discharge detection and elimination tasks could be coordinated with the overall assessment.

What is CCTV inspection?

CCTV (closed circuit television) inspection is a method used to evaluate underground pipes. It involves using a camera mounted on a remotely operated tractor. Video footage is collected that is reviewed by a qualified inspector for defects.

The City has purchased a new asset management software program, City Works™. This tool will be very useful to track stormwater system assets and develop an asset management plan for how and when the assets will be repaired or replaced in the future and how much it will cost.

Are there new technologies, equipment, or approaches that could be employed in Sammamish?

Just as stormwater management has evolved over the last 20 years, new stormwater treatment technologies are being developed and tested in order to meet regulatory requirements. The City should keep abreast of technological development through ongoing participation in regional stormwater work groups, attending conferences, and subscribing to technical journals. The Department of Ecology administers the Technical Assessment protocol-Ecology (TAPE) program that evaluates and certifies new stormwater treatment technologies. The City should be aware of new certified technologies and evaluate long term maintenance needs before allowing use within the City.

How might climate change affect stormwater management in Sammamish?

Climate changes that could affect Sammamish are related to the predicted increase in the frequency and intensity of precipitation events. In the Pacific Northwest, heavy rainfall events are projected to become more severe (Snover et al. 2013). This could lead to increased periods of flooding in lowland areas, or in the vicinity of wetlands or constructed ponds that are designed to store water. Stormwater infrastructure designed to convey water from a certain size storm event may not be adequate if more frequent, high-intensity or longer-duration, storms become commonplace. Additionally, unstable slopes may experience more frequent slope failures due to prolonged saturated conditions. As the City upgrades its piped infrastructure and replaces culverts, there are opportunities to upsize systems to accommodate predicted future flow increases.

SECTION 6 – GOALS, OBJECTIVES, AND ACTIONS

This section discusses a set of overarching storm and surface water goals, objectives and actions that together will help ensure accomplishment of the City's vision, goals and outcomes described in the 2015 Comprehensive Plan, policies, and regulations as well as meeting the NPDES permit requirements.

Construction is one activity that requires temporary stormwater management controls.

Goal 1 (G.1) – Comprehensively evaluate and address problems related to the existing stormwater system and manage storm and surface water systems to ensure longevity of assets

The storm and surface water systems consist of a complex set of natural and constructed features and processes. Part of the complexity is due to the fact that parts of the system are constantly changing, either due to natural processes beyond our control such as the weather, or because of human activity (e.g. construction, channeling water through pipes or along roadways, and increasing impervious surfaces). Anticipating and effectively managing those complexities requires an understanding of their interrelationships and what can reasonably be done to protect our natural resources and mitigate the negative impacts while ensuring that human activity can safely occur.

For example, development often results in increased stormwater runoff and pollution, and creates or exacerbates other problems such as flooding or degradation of water quality and habitat. Mitigating problems associated with development requires a comprehensive approach that includes education and outreach; adequate development review, inspection and approvals; construction of capital projects; operations and maintenance of facilities; and interdepartmental and interjurisdictional coordination to effectively reduce impacts.

A beaver management strategy will help provide guidance on this persistent problem in Sammamish.

The Sammamish Stormwater Stewards has a desire to enhance and restore functionality and aesthetics of existing stormwater facilities such as this one.

Objective G.1.1 Provide guidance to address persistent problems in the natural surface water environment.

Action G.1.1.A Develop a beaver management strategy that includes guidance and criteria for passive versus active management.

Action G.1.1.B Develop a groundwater seepage strategy that focuses on management of ongoing seepage-related drainage issues that impact public assets to minimize maintenance requirements, protect the safety of motorized and nonmotorized traveling public, and prevent future problems.

Objective G.1.2 Provide opportunities to retrofit existing stormwater facilities to enhance their effectiveness and/or aesthetics.

Action G.1.2.A Develop City-wide stormwater retrofit strategies to implement water quality and/or flow control treatment where none currently exists and to retrofit existing facilities for better functionality and aesthetics.

Action G.1.2.B Support partnerships with interested stakeholders such as Sammamish Stormwater Stewards to enhance and restore the functionality and/or aesthetics of existing stormwater facilities.

Objective G.1.3 Revise and update the City's policies, regulations, and development standards as appropriate.

Action G.1.3.A The City should review existing development-related policies, standards and codes and evaluate whether implementation and enforcement is effective or if modifications should be made to improve outcomes and best available science.

Objective G.1.4 Participate in regional research activities in the treatment of stormwater runoff, development of new Best Management Practices, and protection of natural resources.

Action G.1.4.A Conduct water quality monitoring, including providing funds for Ecology's regional water quality monitoring program as an alternative to conducting an individual water quality monitoring program in accordance with the City's NPDES Phase II Permit.

Action G.1.4.B Develop program to monitor water quality of priority streams, wetlands, lakes, and stormwater runoff.

Goal 2 (G.2) - Use drainage basin planning to allocate limited resources to address priority problems and opportunities

Comprehensive basin planning is essential to assess current conditions, identify problems and opportunities related to maintenance, operations, preservation and restoration of natural resources, and development of integrated strategies for surface and stormwater management within the basin. This work will also identify potential capital investments the City may wish to fund in the future.

Basin planning is a tool to comprehensively and systematically identify problems and develop solutions in logical geographic areas. System vulnerabilities and surface and stormwater issues outside of the areas identified for initial basin studies will be addressed outside of the basin planning effort, such as the multi-year Stormwater CIP.

Objective G.2.1 Use basin planning as the primary tool to identify, prioritize and schedule surface water capital projects and identify surface water management strategies that support protection and/or restoration of the City's natural resources.

Action G.2.1.A Conduct basin planning on one or more of the City's drainage basins including condition assessment of pipes, hydrologic analysis of flow conditions in stream channels, biological and geomorphic assessment of natural resources, and identification of capital projects and maintenance management strategies.

Education is a key component of Sammamish' stormwater management program.

Action G.2.1.B Establish criteria to help guide land use acquisition to facilitate the City's storm and surface water program goals or to meet regulatory requirements. Criteria should include alignment with the City's priorities, mission and vision; and cost benefit analysis for leveraging other resources, costs of development, operation and maintenance, and benefit to the environment.

Action G.2.1.C Establish a fund to be used to purchase property that meet the City's criteria.

Goal 3 (G.3) - Promote surface and stormwater education and outreach

Technical assistance and community education regarding environmental, storm and surface water stewardship enables the City to protect its quality of life and natural water resources, and enables its residents and businesses to comply with related federal, state, and local mandates. The promotion of stewardship is an integral part of a comprehensive storm and surface water management program and is required by the City's NPDES Phase II Permit.

Objective G.3.1 Provide education and outreach opportunities that support the City's stormwater management goals.

Action G.3.1.A Continue to conduct education and outreach as required by the City's NPDES Phase II Permit, and expand the program by offering different types of events across multiple sectors, such as educational opportunities for homeowners and developers.

Action G.3.1.B Provide leadership in a regional stormwater outreach group such as the Stormwater Outreach Group (SOGGIES) regional forum.

Action G.3.1.C Update the City's stormwater webpage to include new information on Low Impact Development code updates and revised drainage standards.

Action G.3.1.D Update educational information on changes to Low Impact Development codes and revised stormwater standards using various printed and on-line formats.

Objective G.3.2 Work with community members to promote stewardship of local storm and surface water resources.

Action G.3.2.A Provide education, outreach and support to community volunteer groups such as the Boy Scouts to promote Drain Ranger program.

Adult Kokanee spawning in Ebright Creek. Photo by Richard Tabor, USFWS.

Goal 4 (G.4) - Promote the recovery of Lake Sammamish kokanee and other threatened or endangered salmonids

Under the federal Endangered Species Act, Chinook salmon were listed as a threatened species in March 1999, and bull trout were listed as a threatened species in November 1999. Additionally, Lake Sammamish kokanee are a species of high importance to the City and region. These fish and listings emphasize the need for continued focus on effectively managing storm and surface water through the City's regulations, policies, projects and programs to protect Lake Sammamish.

Objective G.4.1 Preserve and protect habitat that supports Lake Sammamish kokanee salmon and other threatened salmonid species.

Action G.4.1.A Provide active staff membership to support the Kokanee Work Group (KWG) in its efforts to improve habitat and remove fish passage barriers for Lake Sammamish kokanee salmon.

Action G.4.1.B Provide active staff membership to support the WRIA 8 in its efforts to improve habitat for Chinook salmon.

Objective G.4.2 Conduct habitat improvement projects that support salmon recovery.

Action G.4.2.A Review and map culverts for fish passage on fish-bearing streams and prioritize culverts for repair and replacement.

Action G.4.2.B Support Kokanee Work Group Blueprint and WRIA 8 Implementation Plan projects in the storm and surface water program.

Goal 5 (G.5) – Prepare a multiyear list of Capital Improvement Projects that address the City's storm and surface water priorities

Developing a multiyear list of storm and surface water Capital Improvement Projects (CIP) will provide a blueprint for moving forward to address priority issues and problems. The City's stormwater capital assets will be planned and financed to ensure that the benefits of the facilities and their costs are balanced over time.

Objective G.5.1 Identify opportunities and needs for surface and storm water capital improvements that address the City's priorities.

Action G.5.1.A Identify grant-eligible capital projects and pursue grants and other partnerships as a source of funding.

Action G.5.1.B Finance an ongoing Water Quality Opportunity Fund to implement water quality improvements beyond what is required in partnership with other city projects, other agency-sponsored projects or with special interest groups.

Objective G.5.2 Identify maintenance projects that improve the functionality of the surface and stormwater system.

Action G.5.2.A Conduct ditch and culvert maintenance on up to 2 miles of the City's ditch system per year.

Goal 6 (G.6) - Promote City-wide compliance with storm and surface water regulations

The Federal Clean Water Act, implemented through the municipal stormwater NPDES permit, mandates a wide variety of local programs to manage surface and storm water and improve water quality. Compliance is measured by the effectiveness of the City's surface water and water quality programs, which impact operations in Parks, Public Works, and other departments.

Concurrent with the writing of this Plan, the City is in the process of adopting a new Stormwater Design Manual.

Objective G.6.1 Educate, implement and enforce City storm and surface water codes and standards in accordance with applicable local, Federal and State laws and permits. Additionally, coordinate with private entities such as the two private golf courses in Sammamish to manage surface and stormwater runoff.

Action G.6.1.A Adopt a new Stormwater Design Manual in accordance with the City's NPDES Phase II Permit.

Action G.6.1.B Conduct a City-wide review of development codes, standards and guidance documents and revise as needed to incorporate and require Low Impact Development (LID) principles and LID BMPs in accordance with the City's NPDES Phase II Permit.

Action G.6.1.C Develop and implement a policy requiring privately-owned stormwater facilities that drain to the City's storm system be properly maintained. This will help ensure that they continue to function as designed and not become an eyesore to the surrounding community.

Goal 7 (G.7) - Coordinate surface and stormwater management services with neighboring jurisdictions

Many of the City's drainage basins cross jurisdictional boundaries, including Evans, Laughing Jacobs, and North Fork Issaquah Creeks. In order to achieve a comprehensive approach to surface and stormwater management, the City should coordinate surface and stormwater management services with neighboring jurisdictions.

Objective G.7.1 Coordinate with other jurisdictions to discuss regionally significant topics and cross-watershed issues.

Action G.7.1.A Regularly meet with staff from King County, City of Issaquah, City of Redmond, Sammamish Plateau Water, NE Sammamish Plateau Sewer and Water District and other organizations to coordinate development projects, capital improvement projects, maintenance issues, and basin plans and studies related to storm and surface water.

Action G.7.1.B Participate in regional work groups such as American Public Works Association Stormwater Manager's Group, Local Jurisdictional Stormwater Monitoring Caucus, NPDES Permit Coordinators Group, Regional Operations and Maintenance Program (*ROADMAP), Stormwater Outreach for Regional Municipalities (STORM), and Kokanee Work Group (KWG).*

Goal 8 (G.8) - Develop storm and surface water rates and charges based on present and future revenue needs

Comprehensive management of storm and surface water should include anticipation of future growth, maintenance, operations and changing requirements of the system. Cost estimates should be based upon the present and future requirements of the system and should be one of the main sources for determining the rates and charges of the program.

Objective G.8.1 Assess condition of storm and surface water systems, operating and capital needs to maintain functionality and meet regulatory and discretionary requirements.

Action G.8.1.A Develop stormwater asset management program to inventory publicly-owned storm and surface water assets; establish appropriate levels of service for maintenance, repair and replacement.

Objective G.8.2 Plan, prioritize and implement capital projects and programs to meet the goals and objectives of this Comprehensive Plan.

Action G.8.2.A Conduct stormwater rate study and staffing analysis and adjust rates or system development charges, as necessary, to meet current and projected revenue needs to fund stormwater management program and capital projects.

This page left intentionally blank.

SECTION 7 – RECOMMENDATIONS FOR MOVING FORWARD

This section provides information about the recommended programmatic work elements to be implemented in the context of Levels of Service (LOS). It also describes the available funding sources and mechanisms to carry out the required and discretionary storm and surface water related capital projects, and maintenance and operational activities.

Sammamish Community Center Rain Garden.

The following high level program work elements make up the City's stormwater management program:

- Operations and Maintenance
- Development
- Capital Projects
- Public Education and Outreach
- Local and Regional Coordination

The NPDES Permit has minimum requirements in each program work element. Other programs are implemented because the City Council has deemed them to be important as they provide value to the residents of Sammamish in other ways, such as supporting the City's environmental goals.

Additional activities are proposed for each work element that are not required under the City's NPDES permit, but would further accelerate progress towards the City's environmental goals as outlined in the City's Comprehensive Plan. These constitute the Enhanced Levels of Service.

The City's definition of a basic level of service (LOS) in the context of surface and stormwater management is the level of service provided to meet NPDES Permit requirements and meet other City established goals and objectives.

What are levels of service?

NPDES Permit requirements are the minimum levels of service (LOS) needed to maintain the public stormwater infrastructure; promote public health, safety, and welfare by reducing negative stormwater impacts; and comply with relevant regulations. The City's existing LOS provides work elements that go beyond the minimum level of service to meet other City established goals and objectives. This comprises the basic LOS.

Each work element also has a set of enhanced LOS and estimated annual costs that are proposed for consideration. The enhanced LOS goes even further than the basic LOS activities by targeting problems and opportunities specific to current Sammamish storm and surface water issues.

What are the recommendations for moving forward?

The recommended levels of service for each work element is to fund and implement the enhanced LOS. This includes continuation of the existing programs which meet the NPDES permit requirements and other priority storm and surface water management needs.

Tables 7-1 through 7-5 provide a summary of each work element currently being performed by the City and recommended enhancements for the following types of activities:

- Operations and Maintenance
- Development Support
- Capital Improvement
- Education and Outreach
- Local and Regional Coordination

For more details and the basis for annual estimated budgets, see Appendix A.

Table 7-1 Operations and maintenance level of service

NPDES Permit Required	Existing Levels of Service	Enhanced Levels of Service	Annual Estimated Budget	Assumptions
CB inspections and maintenance	CB inspections and maintenance	Same	$172,000	All City owned catch basins are inspected every two years and cleaned at time of inspection. CBs on arterials are inspected and cleaned annually. Assume 5,000 catch basins cleaned.
Stormwater facility inspection	Stormwater facility inspection	Same	in house staff	Annually performed by one in house full time stormwater inspector. Assume 427 stormwater facilities
Illicit Discharge, Detection, and Elimination Program	Illicit Discharge, Detection, and Elimination Program	Same	in house staff	Investigated by stormwater inspector and stormwater technician. Maintenance crew performs clean-up when needed. Training is provided by Stormwater Program Manager. Responded to 24 complaints in 2015. See Section 4 for more information.
	Emergency response	Same	$6,000	Some work performed by in house maintenance crew and stormwater inspector.
	Street sweeping	Same	$55,000	See Section 4 for more information.
	Pond mowing	Same	$220,000	Each pond is mowed once per year. 291 mowed in 2015.
	Inspection of privately owned stormwater facilities	Same	in house staff	Performed by one in house full time stormwater inspector.
	Respond to citizen action requests	Same	in house staff	Performed by one in house full time stormwater inspector, one stormwater technician, and maintenance crew as needed.
		Action G.1.1.A: Beaver Management Strategy and implementation	$15,000 one time cost + $15K annually	See Appendix A
		Action G.5.2.A: Ditch maintenance	$100,000	See Appendix A
		Action G.6.1.C: Enforcement policy for commercial properties and implementation	$20,000 one time cost + $30K annually	See Appendix A
		Action G.8.1.A: Stormwater Asset Management Program	$25,000 one time cost	See Appendix A

Table 7-2 Development level of service

NPDES Permit Required	Existing Levels of Service	Enhanced Levels of Service	Annual Estimated Budget	Assumptions
Review all stormwater site plans for proposed development activity	Review all stormwater site plans for proposed development activity	Same	In house staff	Two full time in house development reviewers plus professional services support by contract
Inspect construction sites all permitted development sites during construction for TESC and permanent stormwater facilities	Inspect all permitted development sites during construction for TESC and permanent stormwater facilities	Same	In house staff	Two full time in house Public Works construction inspectors plus 9 month seasonal employee
Adopt new design manual	Action G.6.1.A: Adopt new design manual	Same	$45,000, one time cost	See Appendix A
Update LID code	Action G.6.1.B: Update LID code	Same	$50,000, one time cost	See Appendix A
	Action G.1.3.A: Implementation and enforcement of development-related policies, standards and codes	Same	In house staff	See Appendix A
		Action G.3.1.D: Develop LID and design manual educational material	$15,000, one time cost	See Appendix A

Table 7-3 Capital Improvement Program levels of service

NPDES Permit Required	Existing Levels of Service	Enhanced Levels of Service	Annual Estimated Budget	Assumptions
Provide water quality treatment in accordance to standards for all CIP projects.	Provide water quality treatment in accordance to standards for all CIP projects.	Same	Varies	CIP program as approved by City Council
	Design and construction of Inglewood Stormwater Retrofit and stormwater componet of several motorized and nonmotorized transportation projects including Sahalee, SE 4th and IFCR.	Continue to onboard new projects as current ones are completed	Varies	Based on total project costs including design, construction and construction management.
	Action G.2.1.A: Basin Planning	Same	$150,000 - $400,000 per plan	See Appendix A
	Action G.5.1.A: Pursue Grants	Same	$5,000 -$10,000	See Appendix A
		Action G.1.1.B: Groundwater seepage strategy and implementation	$40,000, one time cost + $50K annually	See Appendix A
		Action G.1.2.A: Stormwater Retrofit strategy and implementation	$50,000 one time cost + $50K annually	See Appendix A
		Action G.2.1.B: Establish criteria for land acquisition	In house staff	See Appendix A
		Action G.2.1.C: Property acquisition fund	$250,000 - $1,000,000 per biannual	See Appendix A
		Action G.4.2.A: Map and prioritize fish passage culverts and implementation	$54,000, one time cost + $500,000 to $1,000,000 annually	See Appendix A
		Action G.4.2.B: Support KWG Blueprint and WRIA 8 projects	varies	See Appendix A
		Action G.5.1.B: Stormwater Opportunity Fund	$250,000 - $500,000 per biannual	See Appendix A
		Action G.8.2.A: Stormwater Rate Study	$83,000 one time cost	See Appendix A

Table 7-4 Education and Outreach levels of service

NPDES Permit Requirement	Existing Levels of Service	Enhanced Levels of Service	Annual Estimated Budget	Assumptions
Education and Outreach to target audiences such as K-12 and track behavior changes	Action G.3.1.A: Education and Outreach	same	$30,000	One target audience K-12 has been identified and provide watershed and surface water education. Metrics are documented to determine behavior changes as a result of program. In 2015 and 2016, the City received grants from King Conservation District for program. See Appendix A for information.
	Action G.3.2.A: Provide education and outreach to support community volunteer groups such as Drain Rangers	Increase level of support to volunteer groups	In house staff	See Appendix A
		Action G.1.2.B Support partnerships with interested stakeholders such as Sammamish Stewards	In house staff	See Appendix A
		Action G.3.1.C: Update Storm water Webpage	$10,000 one time cost	See Appendix A

Table 7-5 Local and Regional Coordination levels of service

NPDES Permit Requirement	Existing Levels of Service	Enhanced Levels of Services	Annual Estimated Budget	Assumptions
Water quality monitoring	Action G.1.4.A: Water quality monitoring	Same	$170,000	See Appendix A
	Action G.4.1.A: Support Kokanee Work Group	Same	In house staff	See Appendix A
	Action G.4.1.B: Support WRIA 8	Same	In house staff	See Appendix A
	Action G.7.1.A: Regularly meet and coordinate with staff from Local Jurisdictions	Same	In house staff	See Appendix A
	Action G.7.1.B: Participate in Regional Work Groups	Same	In house staff	See Appendix A
		Action G.1.4.B: Develop water quality monitoring plan	$50,000- $75,000	See Appendix A
		Action G.3.1.B: Leadership role in stormwater regional outreach program	In house staff	See Appendix A

Operations and Maintenance

Condition assessment of pipes would help "see" what's inside and help guide maintenance crews for better asset management

Much of the City's routine operations and maintenance activities on publicly owned storm and surface water infrastructure assets are largely dictated by the NPDES Phase II Permit and associated maintenance standards referenced in the *Ecology 2014 Stormwater Management Manual for Western Washington* and the *Guidance Document for Western Washington Low Impact Development Operation and Maintenance* (Herrera Environmental Consultants Inc. and Washington Stormwater Center 2013).

The City currently uses a combination of City crews and contractors to complete stormwater infrastructure inspection and maintenance. This approach should be evaluated on a regular basis to ensure it is the most cost effective, meets permit requirements and minimizes risk to the City. It is working well at the time of this writing and utilizing contractors should be continued.

Existing LOS work elements required by the NPDES Permit, and recommended actions for an enhanced LOS are described below. Appendix A provides more detail for the new recommended actions.

Existing LOS work elements

NPDES Permit Requirements

- Annual inspection of all stormwater treatment and flow control Best Management Practices (BMP) facilities. Provide maintenance of all publicly owned and operated facilities within one year of inspection as needed.
- Inspect all catch basins every two years. Provide maintenance of catch basins within six months of inspection as needed.
- Implement an Illicit Discharge, Detection and Elimination Program to respond to illicit discharges to the publicly-owned stormwater system.

Other Programs

- Emergency Response
- Street sweeping
- Pond mowing
- Inspection of privately-owned stormwater facilities
- Respond to storm and surface water-related complaints

Example of a beaver deceiver.

Enhanced LOS work elements

There are several ongoing operational problems that the City has historically dealt with on an individual basis. However, these issues continue to pose an uncertain amount of risk to public and private infrastructure, public health and safety. The City may want to assess the magnitude and frequency with which the problems continue to arise and develop strategies to address the priority ones. There are also opportunities to expand existing operational efforts on which the City should take advantage.

- Action G.1.1.A: Develop a Beaver Management Strategy

  Flooding problems caused by beaver dams are a persistent problem in Sammamish. Staff have resorted to installing beaver deceivers, and trapping and relocating the beavers as needed. There are several very large dams in the City that are cause for concern about public safety and risks to public infrastructure or private property if they should fail.

- Action G.5.2.A: Perform proactive ditch maintenance

  Much of the drainage system in the City consists of ditches and culverts. These get filled with sediment and vegetation over time due to natural processes or improper erosion and sediment control on construction sites. This significantly reduces their capacity and can result in flooding of property, roadway or shoulder damage.

- Action G.6.1.C: Develop an enforcement policy for privately-owned stormwater facilities

  The City is responsible for ensuring that the entire stormwater system is inspected and properly maintained. Many businesses do not follow through on the necessary maintenance of their facilities to ensure they continue to function as designed and therefore may be contributing pollutants to receiving water bodies.

- Action G.8.1.A: Develop storm and surface water Asset Management Program

  The City recently purchased and implemented the Cityworks™, a GIS-based asset management program which tracks labor, equipment and material costs. Creating customized reports and analyzing the data will help maximize efficient deployment of limited resources and create a database of historical costs.

Development Review

The City is responsible for establishing, reviewing and enforcing development policies, codes, standards and processes to meet local, State and Federal regulations, as well as the vision that the Council adopted for the community described in the City's Comprehensive Plan.

Existing LOS work elements required by the NPDES Permit or necessary to meet City goals, and recommended actions for an enhanced LOS are listed below. Appendix A provides more detail for the new recommended actions.

Existing LOS work elements

NPDES Permit Requirements

- Review stormwater site plans for all proposed developments
- Inspect all permitted development sites during construction for compliance with approved temporary erosion and sediment control plans
- Action G.6.1.A: Update Stormwater Design Manual
- Action G.6.1.B: Update relevant codes to require implementation of Low Impact Development (LID) on new construction projects

Other Programs

- Action G.1.3.A: Implementation and enforcement of development-related policies, standards and codes

Enhanced LOS work element

The NPDES permit requires the City to make significant changes to its codes and design manual. It is important to provide assistance to the development and engineering community on how to be in compliance with the new requirements.

- Action G.3.1.D: Update educational and technical material explaining the changes to LID and Stormwater Design Manual requirements

Stormwater detention vault at Sammamish Community and Aquatic Center

Capital Improvement Projects

The City designs and constructs Capital Improvement Projects (CIP) to protect public health and safety, enhance the environment and facilitate the movement of people and commerce. The Surface Water Capital Fund includes drainage projects as well as the stormwater components of transportation CIP projects.

Existing LOS work elements required by the NPDES Permit or necessary to meet City goals, and recommended actions for an enhanced LOS are listed below. Appendix A provides more detail for the new recommended actions.

Existing LOS work elements

NPDES Permit requirement

- Ensure the required minimum water quality treatment components are included in CIP projects

Other Activities

- Construct CIP projects currently funded in the 2015-2016 Surface Water CIP
- Action G.2.1.A: Conduct basin planning on priority basins
- Action G.5.1.A: Continue to pursue grants and other sources to help fund the stormwater CIP

Enhanced LOS work elements

The City infrastructure is aging, significant development and infill is taking place. Water resource practitioners are taking a quite different approach than what was thought to be state-of-the-art best practices in the past due to more thorough research and new available data. All of this has created a need to assess existing facilities and retrofit selected stormwater assets to ensure their continued functionality and efficiency either per their original design or to bring them up to current design and regulatory standards.

- Action G.1.1.B: Develop and implement groundwater seepage management strategy

  Groundwater seeps are very prevalent in the City even during the summer due to the topography and geology of the plateau. These often are just nuisance problems until they emerge onto the roadway or sidewalk and cause a hazard to drivers, pedestrians and bicyclists.

- Action G.1.2.A: Stormwater Retrofit strategy and implementation

  It is well-documented that urban stormwater runoff is a significant source of nonpoint pollution to the surrounding waterbodies. There are older, fairly built out areas in the City that have inadequate to no stormwater treatment facilities which are potentially a source of pollutants. The City should conduct an assessment of these areas, field verify and implement priority retrofits as potential grant funds become available.

- Action G.2.1.B: Establish criteria for land acquisition
- Action G.2.1.C: Property acquisition fund

  The City is experiencing rapid development with significantly greater densities than in the past. Several residents have expressed a strong desire to encourage design and construction of open, more natural-looking stormwater treatment facilities.

  These typically require appreciably more land than an underground tank so the City should create a fund to purchase property for future stormwater treatment facilities as funds allow.

- Action G.4.2.A: Map and prioritize fish passage culverts and implementation

  The US District Court recently ruled that Washington State was to accelerate their program to replace culverts that are fish barriers with ones that are fish-passable. As a result, jurisdictions around the state anticipate future rulings targeted towards local agencies so it is recommended that the City fund an ongoing program to inventory, plan and replace priority culverts to make them fish-passable.

- Action G.4.2.B: Support Kokanee Work Group Blueprint and WRIA 8 Implementation Plan projects

- Action G.5.1.B - Stormwater Opportunity Fund

  One of the key values articulated in the City's Comprehensive Plan is one of environmental awareness, enhancement and protection. As funds are available, the City should set aside monies to do more than the minimum water quality treatment requirements on its capital projects, use it to leverage regional or community partnerships on storm and surface water projects, or as matching funds for grant opportunities.

- Action G.8.2.A - Stormwater Rate Study

  The Stormwater Capital Plan proposes several capital projects to be implemented over the next 6 to 10 years. In addition, the City's NPDES Phase II Permit requires inspection and maintenance of the City's catch basins and stormwater facilities, education and outreach and other expenditures that go toward operating and maintaining the City's surface and stormwater system. This project is to conduct a surface water rate study to determine if the existing surface water fees and system development charges are appropriate to cover the current and projected revenue needs.

Education and Outreach

With the adoption of a new stormwater manual by December 31, 2016, City staff and developers alike will need to become familiar with new requirements and development standards.

Educational materials should be created for use by developers and City staff to more efficiently process development applications according to new requirements and standards. These resources should be made available on-line on the City's website.

Existing LOS work elements required by the NPDES Permit or necessary to meet City goals, and recommended actions for an enhanced LOS are listed below. Appendix A provides more detail for the new recommended actions.

Education and outreach should be expanded to reach more residents

Existing LOS work element

NPDES Permit requirement

- Develop education and outreach materials that are targeted towards specific groups, including K-12, developers and the general public and track behavior changes

Other Activities

- Action G.3.1.A: Education and Outreach targeted at elementary school children.
- Action G.3.2.A: Provide education and outreach to support community volunteer groups such as the Drain Rangers.

Enhanced LOS work elements

- Action G.1.2.B: Support partnerships with interested stakeholders such as Sammamish Stormwater Stewards
- Action G.3.1.C: Update City's stormwater webpage.

  There are a number of changes to the City's regulations, processes, codes and standards which must be made readily available to the public on the City's webpage. Posting materials on line is an effective way to education individuals about ways they can make a positive impact on the environment.

Local and Regional Coordination

The City should continue to coordinate with WRIA 8, NPDES permit managers, and other governmental and non-governmental organizations to explore local government roles in (1) protecting and enhancing ecological and biological processes related to storm and surface water runoff, (2) protecting and restoring aquatic habitat to support kokanee and threatened or endangered salmonid species , (3) promoting storm and surface water Best Management Practices for operations and maintenance, and (4) cooperating with King County Health Department and the City's Parks Department to help assure that local lakes and streams are safe for human recreation.

Existing LOS work elements required by the NPDES Permit or necessary to meet City goals, and recommended actions for an enhanced LOS follow. Appendix A provides more detail for the new recommended actions.

Existing LOS work elements

NPDES Permit requirements

- Water Quality Monitoring—The City is required to contribute to Ecology's Regional Stormwater Monitoring Program (RSMP). The water quality monitoring fund is used for status and trends monitoring to evaluate water quality in small streams and nearshore marine areas, stormwater program effectiveness monitoring, and implementation of the Source Identification Information Repository (SIDIR) program.

Other activities

- Action G.1.4.A: Conduct water quality monitoring
- Action G.4.1.A: Support Kokanee Work Group
- Action G.4.1.B Support WRIA 8
- Action G.7.1.A: Coordinate with local jurisdictions
- Action G.7.1.B: Participate in Regional Work Groups

Enhanced LOS work elements

Two enhanced work elements are recommended; development of a Sammamish-specific water quality monitoring program and more leadership in the Stormwater Outreach Group (SOGGIES).

- Action G.1.4.B: Develop a water quality monitoring program

  Development of a Sammamish-focused water quality program will help provide data to guide future stormwater management decisions.

- Action G.3.1.B: Take a more prominent leadership role

  The annual Storm water Symposium brings storm water educators together to share lessons learned from local and regional education and outreach efforts. Helping to organize and run the conference will provide leadership skills and experience for staff and more visibility for the City's storm and surface water programs and activities.

The Storm water Outreach Group (SOGGIES) is a regional forum comprised of storm water managers and technical staff from over 80 Puget Sound public agencies. Their purpose is to work together to meet the challenges of managing storm water and its impacts in an effective, consistent and cost effective manner. The City has been an active participant for several years.

Where does the money come from?

The City's storm and surface water capital improvement projects and operational activities are primarily funded through the Stormwater Utility. The revenue sources are based on the extent of property characteristics that contribute to the quantity and quality of stormwater runoff. The Utility consists of the Surface Water Management Fund, which covers operational programs and services, and the Surface Water Capital Improvement Program Fund.

Operation and Maintenance

The Surface Water Management Fund is a self-supporting fund that primarily comes from fees charged to customers. It provides for the operation and maintenance of publicly-owned stormwater conveyance, detention and treatment facilities, and to meet the National Pollutant Discharge Elimination System Permit requirements. Other sources of funding for these activities includes the City's General Fund, a minor amount of investment interest, grants, and contributions through private sources and partnerships.

Capital Improvement Projects

The Surface Water Capital Improvement Program (CIP) allocates funds for the renewal and replacement of the publicly-owned storm drain system, stormwater-related elements of the Transportation Improvement Plan projects, and projects that construct new stormwater assets. Sources of revenue come from one-time system development fees, stormwater rates, transfers from the Surface Water Management Fund, state and federal grants and loans, Real Estate Excise Taxes or private contributions/partnerships.

Other possible sources of revenue for the CIP include bond financing, Councilmanic (Limited Tax) bonds, and special assessments.

System Development Charge

The system development charge (SDC) is a one-time charge imposed on new development. The rapid increase in the number of customers has increased the City's burden to provide adequate storm and surface water infrastructure to support this growth. To mitigate the cost of financing these new facilities, the City has implemented SDCs to provide a way to balance the cost requirements for new utility infrastructure to meet customer growth between existing and new customers. New utility connections, under SDCs, are required to "buy-in" to the system in terms of both existing capacity and future capacity in order to bear their equitable share of the cost of such systems.

The City adopts a schedule of fees during adoption of the budget which includes the current SDC of $1,491 per dwelling unit or commercial building that has less than 2,500 sf of impervious surfaces. Additional charges are imposed for buildings with 2,500 sf or more of impervious coverage.

Surface Water Management Fund Transfers

The City routinely transfers monies from the Surface Water Management fund to help pay for CIP projects and varies from year to year.

Real Estate Excise Tax (REET)

REET is collected from the sale of all real estate in the city and is based on the full selling price including the amount of any liens, mortgages and other debts used to secure the purchase. Cities are authorized to impose this local tax of 0.5 percent on property sales. The funds collected may be spent on local capital improvements that are identified in the capital facilities plan element of the City's Comprehensive Plan as identified by State law.

Grants

The City has obtained grants from King County, the State and Federal Government to design and construct storm and surface water projects.

Private contributions/partnerships

Partnerships with public, private or nonprofit entities can stretch the City's dollars for construction of new storm and surface water infrastructure, operations and maintenance or acquisition. Examples include providing property for free or minimal cost to construct a habitat improvement project.

Bond Financing

There are several bond mechanisms available to pay for storm and surface water improvements. The creation and payment of bond revenues involve public debt financing and in some instances require legal approval, voter approval or both.

Councilmanic (Limited Tax) Bonds

The council can vote to issue limited tax bonds. These bonds do not need a dedicated source of payment but is secured by pledge of the city to pay debt service from existing revenues. State law limits the amount of limited tax bonds that a city can issue up to 1.5 percent of the city's assessed value.

Special Assessment

The City may establish Local Improvement Districts which is a financing mechanism to enable private property owners to help fund their share of new drainage infrastructure as long as a public benefit can be clearly defined and the total assessment does not exceed the cost of the improvement and related bond financing.

SECTION 8 – REFERENCES

AMEC. 2012a. Best Available Science. Wetlands. Prepared for the City of Sammamish by AMEC Environment and Infrastructure, Inc. // www.sammamish.us/departments/communitydevelopment/CriticalAreas

AMEC. 2012b Best Available Science. Streams and Fish and Wildlife Habitat Conservation Areas. Prepared for the City of Sammamish by AMEC Environment and Infrastructure, Inc. //www.sammamish.us/departments/communitydevelopment/CriticalAreas

Booth, D.B., Walsh, T.J., Goetz Troost, K., and Shimel, S.A., 2012, Geologic map of the east half of the Bellevue South 7.5' x 15' quadrangle, Issaquah area, King County, Washington: U.S. Geological Survey Scientific Investigations Map 3211, scale 1:24,000. (Available at http://pubs.usgs.gov/sim/3211/.)

City of Sammamish. 2008. Sammamish Town Center Plan. Adopted June 2008.

City of Sammamish. 2015. Sammamish Comprehensive Plan. October 2015.

City of Sammamish. 2011. Shoreline Management Program. http://www.sammamish.us/pdfs/departments/commdev/Shoreline%20Master%20Program%20Final%20Copy.pdf.

Ecology. 2014. Stormwater Management Manual for Western Washington, as amended in December 2014. Washington State Department of Ecology, December 2014.

ESA Adolfson. 2008. City of Sammamish Shoreline Master Program Update, Shoreline Inventory and Characterization Report. Prepared for the City of Sammamish. www.ci.sammamish.wa.us/files/document/3809.pdf

Herrera Environmental Consultants Inc. and Washington Stormwater Center. 2013. Guidance Document Western Washington Low Impact Development (LID Operation and Maintenance, Prepared for Washington State Department of Ecology Water Quality Program, July 8, 2013.

Horner, R.R., A. A. Azous, O. Richter, S.S. Cooke, L.E. Reinelt, and K Ewing. 1997. Wetlands and Storm water Management Guidelines in The Final Report of the Puget Sound Wetlands and Storm water Management Research Program. Prepared by the Washington State Department of Ecology, King County Water and Land Resources Division and the University of Washington, Seattle. http:/ your.kingcounty.gov/dnrp/library/archive-documents/wlr/wetlands-urbanizationreport/Chap14.pdf

King County. 2013. Noxious Weed GIS data. http:// www.kingcounty.gov/operations/GIS/GISData.aspx. Data accessed in April 2014.

Lake Sammamish Kokanee Work Group. 2014. Blueprint for the Restoration and Enhancement of Lake Sammamish Kokanee Tributaries. King County, WA.

Parametrix. 2009. Revised Draft City of Sammamish Town Center Draft Comprehensive Stormwater Plan. Prepared by Parametrix, Bellevue, WA. December 2009.

Snover, et. al. 2013. Snover, A.K., G.S. Mauger, L.C. Whitely, M. Krosby, and I. Tohver. 2013. Climate Change Impacts and Adaptation in Washington State: Technical Summaries for Decision Makers. State of Knowledge Report prepared for the Washington State Department of Ecology. Climate Impacts Group, University of Washington, Seattle.

Washington DNR. 2016. Surface geology 1:24,000 scale. http://www.dnr.wa.gov/programs-and-services/geology/publications-and-data/gis-data-and-databases. Accessed February 2016.

Washington State Noxious Weed Control Board. 2016. http://www.nwcb.wa.gov/ab_weedlaws.htm. Accessed April 20, 2016.

U.S. Environmental Protection Agency (U.S. EPA). 2012. U.S. EPA website: http://water.epa.gov/type/wetlands/bog.cfm

This page left intentionally blank.

Exhibit 2

APPENDIX A – RECOMMENDED ACTION DETAILS

Action G.1.1.A
Beaver Management Strategy and Implementation

Description: Beaver activity is attributed with some of the flooding problems that occur in Sammamish in areas where streams, wetlands, and ponds intersect road crossings or areas adjacent to the built environment. Sammamish has employed various techniques to protect infrastructure and minimize flooding due to beaver activity, including installation of "beaver deceiver" culvert systems and live-trapping and relocating the beavers. The techniques have generally been implemented as needed. A more thoughtful strategy that includes specific criteria for when certain techniques would be employed would be helpful for City staff and the public. A city-wide beaver management strategy would provide a consistent approach.

Assumptions:

- Beaver management strategy would include criteria for when to (1) leave them alone, (2) protect their environment (e.g., protect the environment they live in to lessen the damage they do), (3) manage their activity (e.g., beaver deceivers, or actively removing their dams), and (4) remove the beavers themselves.
- Environmental permits and approvals needed may include SEPA, and hydraulic project approval from WDFW.
- City staff would develop the strategy, including staff from maintenance and planning (critical areas).

Planning-level Cost Estimate:

Item	Total
Develop beaver management strategy. Assume City staff. Level of effort is assumed to be 150 hours. For budgeting purposes assume $100/hr.	$15,000
Beaver deceivers, beaver removal, or resource protection (implementation of beaver management strategy).	$15,000
Total	$30,000

Action G.1.1.B
Groundwater Seepage Strategy and Implementation

Description: Groundwater seepage contributes to drainage problems in many areas and is a difficult problem to address since the sources are not easily traced. It would be helpful for the City to develop a strategy for dealing with the various drainage issues that are clearly associated with groundwater seepage by (1) understanding the nature and extent of the problem (e.g., locations and seasonality), (2) developing a strategy for dealing with existing ongoing problem locations, and (3) preventing future problems that could occur with additional surface water infiltration (e.g., LID infiltrative facilities in the vicinity of potentially problematic areas based on geologic conditions).

Assumptions:

- City staff would develop the strategy by developing understanding of the nature and extent of the problem through review of drainage complaints and discussions with maintenance staff.
- Strategy would focus on how to manage ongoing problems (e.g., capital solutions, programmatic fixes), and preventative strategies so that future groundwater seepage does not contribute to new drainage problems.

Planning-level Cost Estimate:

Item	Total
Research nature and extent of existing problem. Develop strategy. Assume City staff. Level of effort is assumed to be 400 hours. For budgeting purposes assume $100/hr.	$40,000 One time cost
Design and construction small projects to implement strategy recommendations.	$50,000 annually
Total	$40,000 one time cost plus $50,000 annually

Action G.1.2.A
Stormwater Retrofit Strategy and Implementation

Description: The City's stormwater facilities are aging, and there are areas that do not have any stormwater treatment at all. At the same time, regulations are moving toward requiring jurisdictions to implement structural stormwater controls in areas where none exist. Larger cities and counties that are permitted as an NPDES Phase I MS4 currently have a structural stormwater control condition in their permit. Additionally, grant funds have been available specifically for stormwater retrofit in the past five years. It would be beneficial for Sammamish to develop a city-wide stormwater retrofit strategy to (1) implement stormwater treatment where none exists, (2) upgrade or improve existing stormwater treatment facilities, and (3) be in a better position to take advantage of grant funding opportunities.

Assumptions:

- Stormwater retrofit strategy would be primarily an office-based mapping exercise, with field validation to follow.
- New stormwater treatment would focus on LID alternatives, where appropriate.
- Existing stormwater treatment facilities would be improved for better function and aesthetic appearances.

Planning-level Cost Estimate:

Item	Total
Conduct GIS map analysis of treated vs. untreated areas and age of facility (to assess level of treatment based on design standard at the time of construction). Assume consultant. Level of effort is assumed to be 200 hours. For budgeting purposes assume average $130/hr.	$26,000
Field visits to validate map findings. Assume consultant. Level of effort is assumed to be 40 hours. For budgeting purposes assume average $130/hr.	$5,200
Documentation of retrofit strategy. Level of effort is assumed to be 125 hours. Assume consultant. For budgeting purposes assume average $150/hr.	$18,800
Design and construction small projects to implement strategy recommendations.	$50,000 annually
Total	$100,000

Action G.1.2.B
Support Partnerships with Interested Stakeholders

Description: In order to comprehensively manage storm and surface water systems to ensure longevity of assets and proactively address problems related to development partnerships must be supported with interested stakeholders such as Sammamish Stormwater Stewards to enhance and restore the functionality or aesthetics of existing stormwater facilities.

Planning-level Cost Estimate:

This work will be completed by existing staff and will vary in efforts based on interested stakeholders.

Action G.1.3.A
Implementation and Enforcement of Development-related Polices, Standards and Codes

Description: The City should review existing development-related policies, standards and codes and evaluate whether implementation and enforcement is effective or if modifications should be made to improve outcomes and be consistent with best available science. This action involves City staff staying current with the latest developments in surface and stormwater research.

Planning-level Cost Estimate:

This work will be completed by existing staff and will vary in effort, depending on whether modifications need to be made.

Action G.1.4.A
Water Quality Monitoring

Description: Water quality monitoring is required by the NPDES Phase 2 permit. The City has opted in a payment to the Department of Ecology for participation in the Regional Stormwater Monitoring Program . Fees are expected to increase to $35K annually to account for annexation population growth. Water quality monitoring is also conducted on Beaver Lake, Pine Lake, City beach areas, and Ebright Creek.

Assumptions:

- City will continue to pay into the Regional Stormwater Monitoring Program as part of the NPDES Phase 2 permit requirements.
- Beaver Lake and Pine Lake will continue to be monitored for water quality.
- Staff will continue to support the Beaver Lake Management District.
- City beach areas will continue to be monitored for water quality.
- Ebright Creek will continue to be monitored for water quality.

Planning-level Cost Estimate:

Item	Total
Regional Stormwater Monitoring Program (opt in NPDES Phase 2 Permit)	$35,000 annually
Lake Stewardship for Pine and Beaver Lakes	$26,000 annually
Interlocal Agreement with King County for beach water quality monitoring	$9,000 annually
Professional Services contract for Ebright Creek monitoring (estimate does not subtract reimbursement from Crossings at Pine Lake and Chestnut Lane HOA)	$100,000 annually
Total	$170,000

Action G.1.4.B
Develop Water Quality Monitoring Plan

Description: The City currently pays into the Regional Stormwater Monitoring Program and conducts limited water quality monitoring on City lakes and streams as part of other agreements or public health monitoring programs. There is a desire by residents to have a better understanding of the water quality conditions in the City's lakes, streams, wetlands and groundwater and potential causes of water quality degradation. Development of a water quality monitoring program would support collection of data that could be used in future decision making regarding stormwater management in Sammamish.

Assumptions:

- The water quality monitoring program may include wetlands, streams, lakes, groundwater and/or stormwater runoff from roads or development sites.
- A consultant would develop the program for the City based on the City's desired outcomes and needs.
- The water quality monitoring program would not be intended to replace the City's participation in the Regional Stormwater Monitoring Program.

Planning-level Cost Estimate:

Estimated to be $50,000 to $75,000 annually.

Action G.2.1.A
Basin Planning

Description: Basin plans provide comprehensive analysis of surface water characteristics, issues and solutions to identified problems within the framework of the area where water naturally drains (i.e., the drainage basin). The East Lake Sammamish Basin Plan was completed by King County in the early 1990s and Sammamish updated two of the basin included in that plan (Inglewood and Thompson) in 2009. Additional plans are needed to update conditions that have changed since the 1990s to provide new analysis and recommendations to protect natural resources and improve water quality and drainage concerns.

The basin plans would include assessment of stormwater conveyance pipes that are primarily belowground. Using CCTV tools, the City would assess the condition of stormwater pipes and develop a repair, replacement, or maintenance schedule based on the results of the assessment. The data gathered during a CCTV assessment can be used for other purposes, such as evaluation of illicit discharges or connections to the stormwater system.

Assumptions:

- Basin planning would include description of physical and biological conditions and problem areas, and recommendations to address identified issues. Hydrologic and hydraulic modeling may also be conducted depending on basin conditions and whether modeling is needed for identification of problems or development of solutions.
- Lengths of pipes for condition assessment are assumed, based on an estimated average per basin.

Item	Total
Basin plan and recommendations for solutions to identified problems.	$150K to $300K
CCTV inspection and review (assume 40,000 linear feet at $2.50/LF for CCTV, cleaning, and disposal)	$100,000
Total	$150K to $400K per basin plan

Action G.2.1.B
Establish Criteria to Help Guide Land Acquisitions

Description: Establish criteria to help guide land use acquisition to facilitate the City's storm and surface water program goals or to meet regulatory requirements. Criteria should include alignment with the City's priorities, mission and vision; and cost benefit analysis for leveraging other resources, costs of development, operation and maintenance, and benefit to the environment.

Planning-level Cost Estimate:

This work will be completed by existing staff.

Action G.2.1.C
Property Acquisition Fund

Description: The City is fortunate to have high-quality natural resources that provide value to the residents of Sammamish and the region in multiple ways. Many of the City's natural resources are complementary to the surface water network, providing beneficial aspects including temperature regulation, slope stability, flow attenuation, water filtration, and other functions. Occasionally, properties that would be beneficial to the functionality of the system become available for purchase. This fund would be used to purchase properties that preserve natural resources that provide a surface water benefit.

Assumptions:

- Biannual placeholder fund.

Planning-level Cost Estimate:

Item	Total
Placeholder per biannual	$250K to $1,000,000
Total	$250K to $1,000,000

Action G.3.1.A
Education and Outreach

Description: The City conducts education and outreach as required by its NPDES Phase II Permit. Currently, a consultant is hired to assist in providing outreach services, as requested by the City. The outreach and education program targets K-12 as the target audience in order to educate and track behavior changes. The general public is reached through two educational booths per year. This outreach should continue at the current funding level.

Assumptions:

- Continued consultant at the current funding level.
- The King Conservation District grant should continue to be used for funding.

Planning-level Cost Estimate:

Item	Total
Assume consultant is hired at the current funding level to provide the range of public outreach and education services currently offered. Budget is assumed to be $30,000/ year.	$30,000
Total	$30,000

Action G.3.1.B
Leadership Role in Regional Stormwater Outreach

Description: This project is to assume a leadership role in the Stormwater Outreach Group (SOGGIES) regional forum. This group is a subgroup of Stormwater Outreach for Regional Municipalities (STORM) who recently hired a full time coordinator through grants. The City has been an active participant in both outreach forums for several years. By assuming a leadership role in the SOGGIES group, the City will establish itself as a leader in stormwater public education and outreach and establish a stronger regional presence. Each year, these groups sponsor and organize a Stormwater Symposium that brings stormwater educators together to share local and region education and outreach efforts.

Assumptions:

- Leadership role will require attendance at all STORM and SOGGIES meetings, as well as meeting preparation and follow-up time (e.g., lining up speakers, preparing agendas).
- Assume 50—100 additional hours per year will be necessary for one City staff person to assume a leadership role in SOGGIES.

Planning-level Cost Estimate:

Item	Total
Prepare meeting agendas, line up speakers, and attend meetings. For budgeting purposes assume $100/hr.	$5,000-$10,000/year
Total	$5,000-$10,000/year

Action G.3.1.C
Update Stormwater Webpage

Description: There are a number of significant changes that will be occurring in the City's stormwater management program, including revised codes and standards and adoption of a new Surface Water Design Manual. A revamped webpage would be useful to present online resources, such as education and outreach materials, to the public. The website would include a dashboard for each Stormwater Management program element that would provide current project status. The website would also include a reference to the rights of property owners regarding storm and surface water issues.

Assumptions:

- City staff will update the webpage.
- This is a one-time update, however, the webpage will need to be periodically refreshed with new information.

Planning-level Cost Estimate:

Item	Total
Assume City staff will update the webpage with readily available content. Assumed any new content (such as educational materials) would be developed in other tasks. Level of effort is assumed to be 100 hrs. For budgeting purposes assume $100/hr.	$10,000
Total	$10,000

Action G.3.1.D
Develop LID and Revised Stormwater Standard Educational Materials

Description: New LID standards, a new Surface Water Design Manual, and revised City design standards could result in some confusion for those who need to implement, guide, or enforce the standards. Educational materials that explain the changes and what they mean for residents and builders in Sammamish would be helpful during the transition.

Assumptions:

- Education and outreach materials would be developed from publically available materials, but tailored to Sammamish-specific codes, rules, and standards.
- Outreach materials would be made available online and social media.
- Anticipated one-page fact sheets include (1) development code changes (then vs. now), (2) new stormwater requirements, and (3) summary of which City stormwater design standards have changed.

Planning-level Cost Estimate:

Item	Total
Preparation of up to 3 fact sheets outlining changes resulting from code updates and revisions, and adoption of a new Surface Water Design Manual (City staff or consultant). Level of effort is assumed to be 80 hours. Consultant at $150/hr. is assumed in planning-level cost estimate.	$12,000
Coordination time with City IT staff to make fact sheets available online. Level of effort is assumed to be 30 hours (City staff time). For budgeting purposes $100/hour is assumed.	$3,000
Total	$15,000

Action G.3.2.A
Education and Outreach to Support Community Volunteer Groups

Description: Provide education, outreach and support to community volunteer groups such as the Boy Scouts to promote Drain Ranger program.

Planning-level Cost Estimate:

This work will be completed by existing staff.

Action G.4.1.A
Support Kokanee Work Group

Description: Lake Sammamish kokanee salmon are an important aquatic species that are celebrated by the community and region. The City has actively participated in the Kokanee Work Group, and should continue to do so through both meeting attendance, and support initiatives to improve access to spawning habitat.

Assumptions:

- The City of Sammamish has three of the four primary kokanee spawning streams in Lake Sammamish: Ebright, Laughing Jacobs, and Pine Lake Creeks. There are opportunities for fish passage and habitat improvement on all of these stream systems.
- Staff from multiple departments are needed to support the goals of the Kokanee Work Group.

Planning-level Cost Estimate:

Item	Total
Attend up to 4 half a day meetings per year with Kokanee Work G. Assume City staff. Level of effort is assumed to be 20 hours. For budgeting purposes assume average $100/hr.	$2,000
Coordinate Kokanee Work Group initiatives, including potential grant applications with internal City staff. Assume City staff. Level of effort is assumed to be 80 hours. For budgeting purposes assume average $100/hr.	$8,000
Total	$2,000 to $10,000

Action G.4.1.B
Support WRIA 8

Description: Chinook salmon is listed as a threatened species under the Federal Endangered Species Act. Provide active staff membership to support the WRIA 8 in its efforts to improve habitat for Chinook salmon.

Planning-level Cost Estimate:

Item	Total
Attend up to 4 half a day meetings per year. Assume City staff. Level of effort is assumed to be 20 hours. For budgeting purposes assume average $100/hr.	$2,000
Total	$2,000

Action G.4.2.A
Map and Prioritize Culverts for Repair and Replacement and Implementation

Description: The recent "Culvert Case" related to treaty rights has prompted the Washington State Department of Transportation and other jurisdictions to review their culverts for fish passage and begin the process of prioritizing culverts for replacement. The City would benefit from reviewing its culvert crossings for streams that are presumed to have fish habitat according to the Washington Department of Natural Resources (DNR). A prioritized list would be prepared for culverts to be replaced or modified as resources are available or other projects are conducted in the vicinity.

Assumptions:

- A consultant with fisheries expertise would conduct this task.
- Up to 20 culverts would be evaluated in the field.
- A report would be developed documenting findings and prioritizing culverts for modification or replacement based on fish passage improvements needed and upstream habitat potential.

Planning-level Cost Estimate:

Item	Total
Review DNR data and City GIS layer for fish-bearing F-type streams, conduct field evaluation, prioritize culverts, and prepare report. Assume consultant. Level of effort is assumed to be 360 hours. For budgeting purposes assume average $150/hr.	$54,000 one time cost
Design and construct to remove fish passage barriers	$500K to $1M, annually
Total	$54,000, one time cost + $500,000 to $1M annually

Action G.4.2.B

Support Kokanee Work Group Blueprint and WRIA8 Implementation Plan Projects

Description: As City budget allows, include When KWG Blueprint and/or WRIA 8 projects in the 6 Year Stormwater Capital Project List. Otherwise, support projects

Planning-level Cost Estimate:

varies

Action G.5.1.A
Pursue Grants

Description: Ecology solicits proposals from municipalities to fund projects that support watershed protection and restoration; prevention, reduction and control of toxic and nutrients; and implementation of stormwater retrofit projects. In the past, Ecology has offers non-competitive capacity building grants to implement the stormwater municipal permit program. However, this funding ($50,000 annually) is not expected to continue. Other grant applications take a significant amount of time and effort to prepare, however, the reward of a successfully funded project can be worth the time and money. Time should be allocated for City staff to identify appropriate grant opportunities and prepare grant applications.

Assumptions:

- City staff would develop a list of projects that would be appropriate for grant funding, should the opportunity become available.
- City staff would develop up to two grant application submittals per year.

Planning-level Cost Estimate:

Item	Total
Develop list of potentially grant-eligible projects, including list of typical information needs for grant applications. Assume City staff. Level of effort is assumed to be 50 hours. For budgeting purposes assume $100/hr.	$5,000
Develop 2 grant application per year. Assume City staff. Level of effort is assumed to be 50 hours. For budgeting purposes assume $100/hr.	$5,000
Total	$5,000 to $10,000

Action G.5.1.B
Stormwater Opportunity Fund

Description: Projects that replace or construct new pollution-generating impervious surfaces, such as transportation improvements are required to install water quality treatment for certain portions of the project. This project would establish a fund to provide additional water quality beyond the minimum requirements for already planned City transportation projects, or other projects being implemented by regional partners, such as neighboring jurisdictions or other governmental organizations (e.g., Sammamish Plateau Water and Sewer District). This fund would provide additional benefits to projects, while minimizing construction costs and disruptions.

Assumptions:

- Fund would only be used for additional water quality improvements, not for water quality improvements that are required as part of the base project.
- Surface water staff in conjunction with transportation engineering staff would jointly determine most appropriate use of funds for City projects.

Planning-level Cost Estimate:

Item	Total
Opportunity fund to be established at $250,000 to $1,000,000 per biannual.	$250K - $500K
Total	$250K - $500K, biannual

Action G.5.2.A
Ditch and Culvert Maintenance

Description: Ditch and culvert maintenance work is not required by the City's current NPDES Phase II Permit, however, it is essential to the functionality of the stormwater conveyance system. The City has over X miles of open water ditches that are integral to the stormwater conveyance system. In addition to conveyance, these ditches can provide other functions such as water quality treatment through vegetative growth in the ditches (e.g., filtering pollutants and sediment). However, the ditches require maintenance when they become overgrown with vegetation, filled with sediment or debris, or experience erosion. This project is to conduct ditching activities to clean out sediment, mow vegetation, and otherwise re-establish ditches to their original functions. Culvert maintenance (e.g., cleaning, removing debris) is also included.

Assumptions:

- This work would be contracted out.
- It is assumed that 2 miles of ditches and/or culverts is maintained per year.
- Culvert repair or replacement is not included in the planning level cost estimate.
- The first two phases of ditch maintenance will be:
  - Phase 1: Sammamish Landing to north end of ELSP project Phase 1b
  - Phase 2: Louis Thompson to Snake Hill

Planning-level Cost Estimate:

Item	Total
Conduct maintenance activities on 2 miles of ditches and/or culverts per year. Assume $10 per linear foot.	$100,000
Total	$100,000

Action G.6.1.A
Adopt New Surface Water Design Manual and Revise City Standards

Description: The City's NPDES Phase II Permit requires permittees to adopt a new Surface Water Design Manual that is equivalent to Ecology's 2014 *Stormwater Management Manual for Western Washington*. Sammamish has typically used King County's Surface Water Design Manual, rather than the Ecology Manual. King County recently updated their 2009 KCSDWM, and has issued the 2016 King County Surface Water Design Manual to replace the 2009 KCSWDM. The 2016 Manual will be effective April 24, 2016, and is equivalent to the 2014 Ecology Manual.

Assumptions:

- City staff will conduct this task.
- The new Surface Water Design Manual will need to be adopted by December 31, 2016, according to the City's Phase II NPDES Permit.
- It is anticipated that up to four meetings will be held with the Planning Commission and/or City Council leading up to final adoption and approval of the manual and updated standards.

Planning-level Cost Estimate:

Item	Total
Determine which design manual the City wants to use, and review changes relative to 2009 KCSWDM. Level of effort is assumed to be 100 hours. For budgeting purposes $100/hr is assumed.	$10,000
Determine which City design standards will need to be revised based on new Surface Water Design Manual criteria, and make revisions. Level of effort is assumed to be 250 hours. For budgeting purposes $100/hr is assumed.	$25,000
Brief the Planning Commission and City Council. Assume up to four meetings, with preparation. Level of effort is assumed to be 100 hours. For budgeting purposes $100/hr is assumed.	$10,000
Total	$45,000

Action G.6.1.B
Conduct City-wide Development Code Review and Revision

Description: The City's NPDES Phase II Permit requires permittees to "review, revise, and make effective their local development-related codes, rules, standards, or other enforceable documents to incorporate and require LID principles and LID BMPs." The Puget Sound Partnership, in collaboration with Ecology, has developed a guidebook, *Integrating LID into Local Codes: A Guidebook for Local Governments* (AHBL 2012), to help assist in this task. Additionally, Ecology has been conducting training sessions throughout western Washington. This task will involve staff across multiple departments, but primarily from Public Works and Planning.

Assumptions:

- City staff will conduct this task.
- Codes, rules, standards, and enforceable documents must be reviewed, revised, and made effective by December 31, 2016.
- It is anticipated that up to four meetings will be held with the Planning Commission and/or City Council leading up to final adoption and approval of revised or updated codes.

Planning-level Cost Estimate:

Item	Total
Review City codes, rules, and standards for compatibility with LID. Level of effort is assumed to be 80 hours. For budgeting purposes $100/hr is assumed.	$8,000
Coordinate revisions, updates, and changes. Level of effort is assumed to be 200 hours. For budgeting purposes $100/hr is assumed.	$20,000
Brief Planning Commission and City Council. Assume up to 4 meetings, with preparation. Level of effort is assumed to be 220 hours. For budgeting purposes $100/hr. is assumed.	$22,000
Total	$50,000

Action G.6.1.C
Develop Enforcement Policy for Commercial Properties and Implementation

Description: The City is responsible for the entire drainage system under its NDPES Phase II MS4 Permit, including commercial properties that drain to the City's system. The City inspects the facilities that are privately owned and operated by commercial properties, and informs the businesses of what types of maintenance are required, and when the maintenance should be accomplished. Many businesses are not following through with their maintenance obligations, and as a result, their stormwater facilities are not functioning as intended and may be contributing pollutants to the City's system. The City needs to clarify its enforcement policy for commercial properties, including when it might be appropriate for the City to conduct the maintenance activity needed and bill the business for the work.

Assumptions:

- City staff would clarify enforcement policy for commercially owned and operated stormwater facility maintenance.
- Any change to the existing policy would need to be approved by the Planning Commission or City Council.

Planning-level Cost Estimate:

Item	Total
Clarify enforcement policy for commercially owned and operated businesses. Assume City staff. Level of effort is assumed to be 200 hours. For budgeting purposes assume $100/hr.	$20,000 One time cost
Provide repairs and facility maintenance. Assume small work contract.	$30,000 annually
Total	$20,000, one time cost + $30K annually

Action G.7.1.A
Coordination with Local Jurisdictions

Description: Regularly meet with staff from King County, City of Issaquah, City of Redmond, Sammamish Plateau Water, and NE Sammamish Plateau Sewer and Water District to coordinate development projects, capital improvement projects, maintenance issues, and basin plans and studies related to storm and surface water. This action item will include coordination with the Water District to assess impact of aging, failing water systems.

Planning-level Cost Estimate:

Item	Total
Assume 24 half day meetings per year for City staff to attend. Level of effort is assumed to be 50 to 100 hrs. For budgeting purposes assume $100/hr.	$5,000 to $10,000
Total	$5,000 to $10,000

Action G.7.1.B
Participate in Regional Work Groups

Description: Managing stormwater involves being a multi-faceted practitioner with knowledge of regulations, engineering principles, aquatic resource and fisheries issues, and treatment technologies. It also involves coordination with multiple agencies and jurisdictions because surface water is not confined to jurisdictional boundaries. The City has taken an active role in regional stormwater and water resource forums, staying current on regulations and partnering where appropriate to reduce costs for elements of the NPDES Phase II Permit. For instance, the STORM group provides education and outreach materials that can be used for the public education and outreach component of the NPDES Phase II Permit. The City should continue to participate in regional coordination efforts.

Assumptions:

- The City participates in the following regional work groups:
    - APWA Stormwater Manager's Group
    - STORM
    - Stormwater Permit Coordinators Group
    - Local Jurisdiction Stormwater Monitoring Caucus
    - ROADMAP
- Assume each group meets quarterly for half a day, and City's role is participatory only (not a leadership role).

Planning-level Cost Estimate:

Item	Total
Assume 24 half day meetings per year for City staff to attend. Level of effort is assumed to be 50 to 100 hrs. For budgeting purposes assume $100/hr.	$5,000 to $10,000
Total	$5,000 to $10,000

Action G.8.1.A
Develop Stormwater Asset Management Program

Description: Sammamish recently purchased the City Works™ asset management software program. This GIS-based software will be very useful for tracking the stormwater system inventory, condition, citizen action requests, and maintenance. The City should develop a plan for how it wants to manage its stormwater assets, including assessment of their condition, maintenance frequencies and cost of repairs and replacement. The City Works™ software is a useful tool to track this information and develop a program that works for City staff.

Assumptions:

- City staff will conduct this task.
- It is assumed that data migration from GIS or other sources into City Works™ has already been done, or will have been done before this task begins.
- Determine what data is available, data gaps (e.g., condition of assets, age of assets, maintenance frequency), and how or if data gaps will be filled.
- Develop strategy for managing assets (e.g., how often should certain features be maintained, when should replacement be scheduled or planned)

Planning-level Cost Estimate:

Item	Total
Evaluate stormwater asset data. Assume City staff. Level of effort is assumed to be 150 hours. For budgeting purposes assume $100/hour.	$15,000
Develop strategy for managing assets. Assume City staff. Level of effort is assumed to be 100 hours. For budgeting purposes assume $100/hour.	$10,000
Total	$25,000

Action G.8.2.A
Stormwater Water Rate Study

Description: The Stormwater Capital Plan proposes several capital projects to be implemented over the next 6 to 10 years. In addition, the City's NPDES Phase II Permit requires inspection and maintenance of the City's catch basins and stormwater facilities, education and outreach and other expenditures that go toward operating and maintaining the City's surface and stormwater system. This project is to conduct a surface water rate study to determine if the existing surface water fees and system development charges are appropriate to cover the current and projected revenue needs.

Assumptions:

- A consultant is needed to assist with the rate and fee study.

Planning-level Cost Estimate:

Item	Total
Consultant cost to conduct rate study (estimate).	$75,000
City staff time to coordinate with Consultant and provide required information. Assume 80 hours at $100/hr.	$8,000
Total	$83,000

City Council Agenda Bill

Meeting Date: **December 6, 2016** Date Submitted: 11/30/2016

Originating Department: Public Works

Clearances:

☐ Attorney	☐ Community Development	☐ Parks & Recreation
☐ Admin Services	☐ Eastside Fire and Rescue	☐ Police
☑ City Manager	☐ Finance & IT	☑ Public Works

Subject: Professional Engineering Development Review Assistance Services Contract

Action Required: Authorize the City Manager to execute a contract with Site Development Associates (SDA) for Professional Engineering development review services as needed, not to exceed $50,000.

Exhibits: Agreement for Services Contract and Scope

Budget: $125,000 per year in the adopted 2017-2018 Public Works Budget for Engineering Services.

Summary Statement:
With current and projected development activity, Public Works staff anticipates the need for additional professional engineering services to provide assistance with development review and incidental related engineering services. The proposed agreement does not commit the City to any expenses.

Background:
Due to the volume of development activity, including the East Lake Sammamish Trail project, Public Works (PW) development review staff need additional support in reviewing and processing development applications in a timely manner. A portion of the work is for certain review tasks that cannot be performed in-house due to workload or specialized engineering review. Expected work may include performing survey review for final plats and boundary line adjustments, geotechnical and structural review, drainage review, and general engineering development review.

The proposed agreement does not commit the City to any expenses and all work will be authorized individually. This arrangement provides the flexibility to provide for the variability in land development applications while eliminating the need to hire additional permanent staff. This contract will provide PW the ability to bring in experienced and specialized resources on an as-needed basis and is an efficient model that provides results while minimizing costs. It also helps provide timely response and excellent customer service to the applicants.

Financial Impact:
The total contract amount is not to exceed $50,000. Developer-paid review fees offset the cost of this work. The Public Works Professional and Engineering budget line (001.040.542.10.41.02) covers this proposed expenditure. This is an as needed agreement, there is no guarantee the full contract amount will be expended.

Recommended Motion:
Authorize the City Manager to execute a contract with Site Development Associates to provide Professional Engineering development review services not to exceed $50,000.

Exhibit 1

CITY OF SAMMAMISH
AGREEMENT FOR SERVICES

Consultant: Site Development Associates, LLC

This Agreement is entered into by and between the City of Sammamish, Washington, a municipal corporation, hereinafter referred to as the "City," and Site Development Associates, LLC, hereinafter referred to as the "Consultant."

WHEREAS, the City desires to have certain services performed for its citizens; and

WHEREAS, the City has selected the Consultant to perform such services pursuant to certain terms and conditions;

NOW, THEREFORE, in consideration of the mutual benefits and conditions set forth below, the parties hereto agree as follows:

1. **Scope of Services to be Performed by Consultant**. The Consultant shall perform those services described in Exhibit "A" of this agreement. In performing such services, the Consultant shall comply with all federal, state, and local laws and regulations applicable to the performance of such services. The Consultant shall perform services diligently and completely and in accordance with professional standards of conduct and performance.

2. **Compensation and Method of Payment**. The Consultant shall submit invoices for work performed using the form set forth in Exhibit "B".

The City shall pay Consultant:

[Check applicable method of payment]

_X_ According to the rates set forth in Exhibit "D "

_X__ A sum not to exceed $50,000 for 2017 Services

_X__ Other (describe): Each task assignment will be completed for an agreed upon lump sum amount. The hourly rates shown in Exhibit D will be referenced to develop the budget for each task assignment. The total amount of all task assignments expended in 2017 shall not exceed $50,000 unless an amendment to this amount is authorized in writing by the City.

The Consultant shall complete and return to the City Exhibit "C", Taxpayer Identification Number, prior to or along with the first invoice submittal. The City shall pay the Consultant for services rendered within ten days after City Council approval.

3. **Duration of Agreement**. This Agreement shall be in full force and effect for a period commencing upon execution and ending December 31, 2017, unless sooner terminated under the provisions of the Agreement. Time is of the essence of this Agreement in each and all of its provisions in which performance is required.

4. **Ownership and Use of Documents**. Any records, files, documents, drawings, specifications, data or information, regardless of form or format, and all other materials produced by the Consultant in connection with the services provided to the City, shall be the property of the City whether the project for which they were created is executed or not

5. **Independent Contractor**. The Consultant and the City agree that the Consultant is an independent contractor with respect to the services provided pursuant to this Agreement. The Consultant will solely be responsible for its acts and for the acts of its agents, employees, subconsultants, or representatives during the performance of this Agreement. Nothing in this Agreement shall be considered to create the relationship of employer and employee between the parties hereto.

6. **Indemnification**. Consultant shall defend, indemnify and hold the City, its officers, officials, employees and volunteers harmless from any and all claims, injuries, damages, losses or suits including attorney fees, arising out of or resulting from the acts, errors or omissions of the Consultant in performance of this Agreement, except for injuries and damages caused by the sole negligence of the City. Should a court of competent jurisdiction determine that this Agreement is subject to RCW 4.24.115, then, in the event of liability for damages arising out of bodily injury to persons or damages to property caused by or resulting from the concurrent negligence of the Consultant and the City,

its officers, officials, employees, and volunteers, the Consultant's liability, including the duty and cost to defend, hereunder shall be only to the extent of the Consultant's negligence. It is further specifically and expressly understood that the indemnification provided herein constitutes the Consultant's waiver of immunity under Industrial Insurance, Title 51 RCW, solely for the purposes of this indemnification. This waiver has been mutually negotiated by the parties. The provisions of this section shall survive the expiration or termination of this Agreement.

Furthermore, should subcontracting be agreed to by the parties, the Consultant shall cause each and every Subcontractor to provide insurance coverage that complies with all applicable requirements of the Consultant-provided insurance as set forth herein, except the Consultant shall have sole responsibility for determining the limits of coverage required to be obtained by Subcontractors. The Consultant shall ensure that the City is an additional insured on each and every Subcontractor's Commercial General liability insurance policy using an endorsement at least as broad as the Insurance Services Office Additional Insured endorsement CG 20 38 04 13.

7. Insurance.

A. The Consultant shall procure and maintain for the duration of the Agreement, insurance against claims for injuries to persons or damage to property which may arise from or in connection with the performance of the work hereunder by the Consultant, its agents, representatives, or employees.

B. Should a court of competent jurisdiction determine that this Agreement is subject to RCW 4.24.115, then, in the event of liability for damages arising out of such services, or bodily injury to persons or damages to property, caused by or resulting from the concurrent negligence of the Consultant and the City, its officers, officials, employees, and volunteers, the Consultant's liability hereunder shall be only to the extent of the Consultant's negligence.

Minimum Scope of Insurance

Consultant shall obtain insurance of the types described below:

1. Automobile Liability insurance covering all owned, non-owned, hired and leased vehicles. Coverage shall be written on Insurance Services Office (ISO) form CA 00 01 or a substitute form providing equivalent liability coverage. If necessary, the policy shall be endorsed to provide contractual liability coverage.

2. Commercial General Liability insurance shall be written on ISO occurrence form CG 00 01 and shall cover liability arising from premises, operations, independent contractors and personal injury and advertising injury. The City shall be named as an additional insured under the Contractor's Commercial General Liability insurance policy with respect to the work performed for the City.

3. Workers' Compensation coverage as required by the Industrial Insurance laws of the State of Washington.

4. Professional Liability insurance appropriate to the Consultant's profession.

Minimum Amounts of Insurance

Consultant shall maintain the following insurance limits:

1. Automobile Liability insurance with a minimum combined single limit for bodily injury and property damage of $1,000,000 per accident.

2. Commercial General Liability insurance shall be written with limits no less than $1,000,000 each occurrence, $2,000,000 general aggregate.

3. Professional Liability insurance shall be written with limits no less than $1,000,000 per claim and $1,000,000 policy aggregate limit.

Other Insurance Provisions

The insurance policies are to contain, or be endorsed to contain, the following provisions for Automobile Liability, Professional Liability and Commercial General Liability insurance:

1. The Consultant's insurance shall not be cancelled by either party except after thirty (30) days prior written notice has been given to the City

Verification of Coverage

Consultant shall furnish the City with original certificates and a copy of the amendatory endorsements, including but not necessarily limited to the additional insured endorsement, evidencing the insurance requirements of the Consultant before commencement of the work.

8. Record Keeping and Reporting.

A. The Consultant shall maintain accounts and records, including personnel, property, financial, and programmatic records, which sufficiently and properly reflect all direct and indirect costs of any nature expended and services performed pursuant to this Agreement. The Consultant shall also maintain such other records as may be deemed necessary by the City to ensure proper accounting of all funds contributed by the City to the performance of this Agreement.

B. The foregoing records shall be maintained for a period of seven years after termination of this Agreement unless permission to destroy them is granted by the Office of the Archivist in accordance with RCW Chapter 40.14 and by the City.

9. Audits and Inspections. The records and documents with respect to all matters covered by this Agreement shall be subject at all times to inspection, review, or audit by the City during the performance of this Agreement.

10. Termination.

A. This City reserves the right to terminate or suspend this Agreement at any time, with or without cause, upon seven days prior written notice. In the event of termination or suspension, all finished or unfinished documents, data, studies, worksheets, models, reports or other materials prepared by the Consultant pursuant to this Agreement shall promptly be submitted to the City

B. In the event this Agreement is terminated or suspended, the Consultant shall be entitled to payment for all services performed and reimbursable expenses incurred to the date of termination.

C. This Agreement may be cancelled immediately if the Consultant's insurance coverage is canceled for any reason, or if the Consultant is unable to perform the services called for by this Agreement.

D. The Consultant reserves the right to terminate this Agreement with not less than fourteen days written notice, or in the event that outstanding invoices are not paid within sixty days.

E. This provision shall not prevent the City from seeking any legal remedies it may otherwise have for the violation or nonperformance of any provisions of this Agreement.

11. Discrimination Prohibited. The Consultant shall not discriminate against any employee, applicant for employment, or any person seeking the services of the Consultant under this Agreement, on the basis of race, color, religion, creed, sex, age, national origin, marital status, or presence of any sensory, mental, or physical handicap.

12. Assignment and Subcontract. The Consultant shall not assign or subcontract any portion of the services contemplated by this Agreement without the prior written consent of the City.

13. Conflict of Interest. The City insists on the highest level of professional ethics from its consultants. Consultant warrants that it has performed a due diligence conflicts check, and that there are no professional conflicts with the City. Consultant warrants that none of its officers, agents or employees is now working on a project for any entity engaged in litigation with the City. Consultant will not disclose any information obtained through the course of their work for the City to any third party, without written consent of the “City”. It is the Consultant's duty and obligation to constantly update its due diligence with respect to conflicts, and not the City's obligation to inquire as to potential conflicts. This provision shall survive termination of this Agreement.

14. Confidentiality. All information regarding the City obtained by the Consultant in performance of this Agreement shall be considered confidential. Breach of confidentiality by the Consultant shall be grounds for immediate termination.

15. **Non-appropriation of funds.** If sufficient funds are not appropriated or allocated for payment under this Agreement for any future fiscal period, the City will so notify the Consultant and shall not be obligated to make payments for services or amounts incurred after the end of the current fiscal period. This Agreement will terminate upon the completion of all remaining services for which funds are allocated. No penalty or expense shall accrue to the City in the event that the terms of the provision are effectuated.

16. **Entire Agreement**. This Agreement contains the entire agreement between the parties, and no other agreements, oral or otherwise, regarding the subject matter of this Agreement shall be deemed to exist or bind either of the parties. Either party may request changes to the Agreement. Changes which are mutually agreed upon shall be incorporated by written amendments to this Agreement.

17. **Notices**. Notices to the City of Sammamish shall be sent to the following address:

City of Sammamish
801 228th Avenue SE
Sammamish, WA 98075
Phone number: (425) 295-0500

Notices to the Consultant shall be sent to the following address:

Company Name	Site Development Associates, LLC
Contact Name	William Helsley, PE
Street Address	1724 W Marine View Dr. Suite #140
City, State Zip	Everett, WA 98201
Phone Number	425-486-6533 x101
Email	bhelsley@sdaengineers.com

18. **Applicable Law; Venue; Attorneys' Fees**. This Agreement shall be governed by and construed in accordance with the laws of the State of Washington. In the event any suit, arbitration, or other proceeding is instituted to enforce any term of this Agreement, the parties specifically understand and agree that venue shall be exclusively in King County, Washington. The prevailing party in any such action shall be entitled to its attorneys' fees and costs of suit, which shall be fixed by the judge hearing the case and such fee, shall be included in the judgment.

The Consultant will be required to obtain a City of Sammamish business license prior to performing any services and maintain the business license in good standing throughout the term of its agreement with the City. A city business license application can be found at: http://www.bls.dor.wa.gov/cities/sammamish.aspx."

19. **Severability.** Any provision or part of this Agreement held to be void or unenforceable under any law or regulation shall be deemed stricken and all remaining provisions shall continue to be valid and binding upon the City and the Consultant, who agree that the Agreement shall be reformed to replace such stricken provision or part with a valid and enforceable provision that comes as close as reasonably possible to expressing the intent of the stricken provision.

CITY OF SAMMAMISH, WASHINGTON	CONSULTANT
Recommended: PW, Steve Leniszewski, PE	
By:_____	By: William Helsley
Print Name: Lyman Howard	Print Name: William Helsley, PE
Title: City Manager	Title: Principal, Site Development Associates, LLC
Date: December 06, 2016	Date: December 06, 2016
Attest/Authenticated:	Approved As To Form:
_____	_____
City Clerk	City Attorney

EXHIBIT A

SCOPE OF SERVICES

General Scope of Work

The CONSULTANT agrees to furnish all labor, materials, equipment and supplies to perform the following services:

Plan checking and design review of development application documents and other engineering related permits or requests for support for compliance with CITY requirements:

a) Perform review of plans and supporting documents submitted to the CITY in conjunction with development applications for compliance with the CITY Standard Specifications and Details for Public Works Construction, Clearing, Grading and Stormwater Management Technical Notebook, ordinances, special project conditions and other adopted criteria indicated by the CITY and made available to the CONSULTANT.

b) Provide to the CITY, within two weeks of receipt, plan redlines and written comments, as appropriate to indicate non-conformance items or issues.

c) Meet to discuss review comments with CITY representative and/or development proponents as necessary.

d) Respond to telephone inquiries from CITY staff, developer's engineer, or others as necessary.

e) Review and provide subsequent plan review redlines and written comments, as necessary, to indicate non-conformance items or issues of re-submittals within two weeks of receipt.

f) Advise CITY in writing at such time as plans are in compliance with those aspects of the development documents under review by the CONSULTANT.

g) Meet with CITY staff periodically to evaluate process and performance of CONSULTANT.

h) Provide feedback to CITY staff relative to adequacy, appropriateness, and thoroughness of CITY standard specifications and details.

i) Perform other incidental engineering services in connection with plan checking.

j) Additional Support as requested:
   1. Attend and support pre-application conferences, project meetings, public hearings, public meetings, public presentations, and open houses
   2. Other related work requested by the CITY.

Consultant will be paid on a time and materials basis in accordance with the rates presented in Exhibit D.

It is anticipated that the task assignments may vary in scope, complexity and location. Specific scopes of work will be developed as individual task assignments are requested.

Authorization of Work

Work requested by the CITY shall be issued in writing. The request by the CITY should include the following information, which may be furnished in coordination with the CONSULTANT:

1. Task Order title (project name)
2. Technical approach to the task (if complex enough to require this)
3. Specific deliverables
4. Schedule with milestones and deliverables
5. Cost/hour estimate
6. Due date of work (Grading Permits must be approved within 45 days of receipt)

All of the above items may be brief, but will be sufficiently detailed to understand the work being authorized and the amount it will cost.

The CITY will review and approve the CONSULTANT'S submittal for any work requested, or at the CITY'S option, negotiate various elements of the work requested prior to authorizing work to begin and issuing a Notice to Proceed. If, after work has begun, the CONSULTANT cannot meet the agreed schedule or cost, the CONSULTANT shall immediately notify the CITY. Authorization of additional time or cost for approved work will be at the sole option of the CITY and will be made in writing. New budgets for any new requests or extensions of previous work will be approved in writing by the CITY prior to beginning new work.

Work may begin when the Notice to Proceed is sent to the CONSULTANT by the CITY, except that emergency actions requiring a 24-hour response can be handled by an oral authorization. Such oral authorization shall be followed up with a written confirmation within 24 hours with the information listed above included.

Exhibit 1

EXHIBIT B

REQUEST FOR CONSULTANT PAYMENT

To: City of Sammamish
801 228th Avenue SE
Sammamish, WA 98075
Phone: (425) 295-0500
FAX: (425) 295-0600

Invoice Number: _____ Date of Invoice: _____

Consultant: _____

Mailing Address: _____

_____

Telephone: _____

Email Address: _____

Contract Period: _____ Reporting Period: _____

Amount requested this invoice: $_____

Specific Program:_____

_____
Authorized signature

ATTACH ITEMIZED DESCRIPTION OF SERVICES PROVIDED

For Department Use Only

Total contract amount	
Previous payments	
Current request	
Balance remaining	

Authorization to Consultant: $
Account Number:
Date:

Approved for Payment by: _____ Date: _____

Finance Dept.

*Check #*_____ *Check Date:*_____

Revised 6/2016

Exhibit 1

EXHIBIT C

TAX IDENTIFICATION NUMBER

In order for you to receive payment from the City of Sammamish, you must have either a Tax Identification Number or a Social Security Number. The Internal Revenue Service Code requires a Form 1099 for payments to every person or organization other than a corporation for services performed in the course of trade or business. Further, the law requires the City to withhold 20% on reportable amounts paid to unincorporated persons who have not supplied us with their correct Tax Identification Number or Social Security Number.

Please complete the following information request form and return it to the City of Sammamish prior to or along with the submittal of the first billing invoice.

Please check the appropriate category:

_____ Corporation _____ Partnership _____ Government Consultant

_____ Individual/Proprietor _____ Other (explain)

TIN No.: _____

Social Security No.: _____

Print Name: _____

Title: _____

Business Name: _____

Business Address: _____

Business Phone: _____

_____ _____

Date Authorized Signature (Required)

Exhibit 1

Exhibit D

On Call Engineering and Design Services
2017 Professional and Administrative Staff Rates

SDA Services Rate Schedule

PRINCIPAL	$ 170.00 per hour
PROJECT MANAGER/SENIOR ENGINEER	$ 150.00 per hour
PROJECT ENGINEER	$ 135.00 per hour
DESIGN ENGINEER	$ 119.00 per hour
CADD TECHNICIAN	$ 92.00 per hour
WORD PROCESSOR/CLERICAL	$ 65.00 per hour

Reimbursable Expenses

MILEAGE	$0.50/mile
OUTSIDE CONSULTANTS	Cost + 15%
REPRODUCTION	Cost + 15%
BLACK AND WHITE COPIES	$0.10/copy
COLOR COPIES	$0.20/copy
SUPPLIES, OTHER	Cost + 15%

These standard rates are effective January 1, 2017, and are subject to update in 2018. Rates may vary on a project specific basis

Exhibit 1

City Council Agenda Bill

Meeting Date: **December 6, 2016** Date Submitted: November 30, 2016

Originating Department: Public Works

Clearances:

☑	Attorney	☐	Community Development	☐	Parks & Recreation
☐	Admin Services	☐	Eastside Fire and Rescue	☐	Police
☑	City Manager	☐	Finance & IT	☑	Public Works

Subject: Inglewood Hill Stormwater Retrofit and Non-motorized Improvement Project Engineering Services during Construction

Action Required: Authorize the City Manager to amend the Osborn Consulting consultant contract to include expanded scope of work

Exhibits: Supplemental Agreement 7

Budget: The 2015-16 Mid-Biennial Budget allocates $4,904,069 for the Inglewood Hill Stormwater Retrofit and Non-motorized Improvement Project.

Summary Statement:
The Inglewood Hill Stormwater Retrofit and Non-motorized Improvement Project will provide water quality treatment and a stormwater tightline system within the historic Inglewood neighborhood. Osborn Consulting is currently under contract for an amount not-to-exceed $462,198 to provide engineering design and engineering services during construction to support the project. The proposed Supplemental Agreement will provide an expanded scope of work and budget for Osborn Consulting for the analysis and design of an outfall alternative for the Inglewood Stormwater Retrofit project. All provisions in the basic agreement will remain in effect except as expressly modified by Supplemental Agreement 7.

Background:
On May 17, 2016, the City entered into a construction contract with Marshbank Construction, Inc., and a Supplemental Agreement with Osborn Consulting to provide engineering support during construction. Both contracts reflected costs to cover the design and construction of an anticipated stormwater outfall through King County real property. Although several designs having been submitted to King County, the City was recently informed that a Special Use Permit would not be approved until the King County parking lot project is permitted. Since King County has not yet submitted a complete application for this parking lot project, it is an unknown when this project would be permitted or when the County would approve the Inglewood outfall.

This supplemental agreement with Osborn Consulting will provide the City with additional engineering services to support the analysis and design of an outfall alternative for the Inglewood Stormwater Retrofit project. The alternative would consider routing the stormwater outfall to Lake Sammamish through the upsizing of an existing pipe network and the avoidance of work on King County real property.

Financial Impact:
The 2015-16 Mid-Biennial Budget allocates $4,904,069 for the Inglewood Hill Stormwater Retrofit and Non-motorized Improvement Project.

The original contract with Osborn Consulting is for an amount not-to-exceed $462,198. The Supplemental Agreement request is for $31,000, bringing the total contract amount to $493,198. It is anticipated that the increase in design support will be offset by savings in the construction contract with no net increase in the overall project budget.

Recommended Motion:
Authorize the City Manager to sign a Supplemental Agreement with Osborn Consulting for an amount not to exceed $31,000.

Authorize the City Manager to retain a management reserve of $6,000 for unanticipated contract services needed to complete the project.

Exhibit 1

SUPPLEMENTAL AGREEMENT

Amendment Number: 7	Date: December 6, 2016
Project: Inglewood Hill Stormwater Retrofit and Non-motorized Improvement Project	City Project number: N/A
Consultant: Osborn Consulting	Contract Number: C2014-0128

The City of Sammamish desires to amend the agreement with Osborn Consulting for the Inglewood Hill Stormwater Retrofit and Non-motorized Improvement Project. All provisions in the basic agreement and as supplemented remain in effect except as modified by this agreement.

The changes to this agreement are described in the attached Work Element 12 Scope and Fee which includes the below work. Changes also include updated Osborn Consulting rates.

A. Hydrologic Modeling
B. Size Flow Control
C. Hydraulic Modeling
D. Design Documentation
E. Addendum to the construction contract documents
F. Additional project management and meetings

Original Contract Amount:	Current Contract Amount	Net Change This Amendment	Estimated Contract Total After Change
$275,000.00	$462,198.38	$31,000.00	$493,198.38

Laura Ruppert 11-30-16 (Osborn Consulting) Date	Approved: City of Sammamish Date

Exhibit 1

OSBORN CONSULTING INCORPORATED

1800 112th Avenue NE Suite 220-E | Bellevue, WA 98004 | P: 425.451.4009 | F: 425.451.4901

DATE NOVEMBER 30, 2016

TO TAWNI DALZIEL, SR. STORMWATER PROJECT MANAGER, CITY OF SAMMAMISH

FROM LAURA RUPPERT, PE, VICE PRESIDENT, OSBORN CONSULTING, INC.

SUBJECT INGLEWOOD HILL STORMWATER RETROFIT AND NON-MOTORIZED IMPROVEMENT PROJECT
AMENDMENT 7
ADD WORK ELEMENT 12 – OUTFALL MODELING

SCOPE OF WORK

This scope amendment #7 requests additional budget to provide engineering services to assess restoring project discharges to match their existing outfall locations. The Inglewood project as currently designed provides a direct discharge outfall to Lake Sammamish which involved rerouting some runoff away from existing open channel and culvert outfalls (lower flows in open channels closer to pre-developed conditions). Amendment #7 will make use of existing infrastructure in East Lake Sammamish Parkway (ELSP), to the extent practical, to match proposed outfall conditions to existing. This work includes hydrologic and hydraulic analysis and design necessary to produce a construction amendment package for the proposed solution.

The schedule for this work is driven by the need to present the construction amendment package to the contractor prior to them de-mobilizing from the site. Critical path deadlines include the following:

- December 7, 2016 NTP
- January 6, 2017 – Draft Deliverables provided to City for 1-week review/comment
- January 20, 2017 – Final Deliverables provided prior to contractor

Support Services are detailed below followed by the proposed budget.

A. Hydrologic Modeling

- Review East Lake Sammamish Trail (ELST) Technical Information Report (TIR) and basin boundary documents provided by the City and compare to the project basin boundaries developed for the Inglewood project design.
- Update Inglewood project basin boundaries for the new outfall condition such that there are points of compliance at utilized outfall locations (i.e. existing 24-inch culvert crossing ELSP and existing storm drainage through the King County parking lot).
- Site visit to verify basin boundaries and outfall conditions.
- Verify flow control requirements (and any exemptions) for new impervious surface added by the project sidewalk to determine if a forested land use condition needs to be assessed.
- Develop a Western Washington Hydrology Model (WWHM) for the updated basin boundaries and applicable land use conditions: Existing, Proposed, and Forest (if needed).
- Run Model and document results. Determine if flow control is necessary to be in compliance.

B. Size Flow Control

- Size flow control infrastructure, if needed, to mitigate increased flows associated with new impervious surface (sidewalk) added by the project.

C. Hydraulic Modeling

- Update the project SWMM model to include existing outfall conveyance. City provided ELST information will be used as a data source for infrastructure that is not included on the project base map.
- Run hydraulic model for Existing and Proposed condition (flows and infrastructure) to verify conveyance capacity. Size increased conveyance capacity where needed.

D. Design Documentation

- Document H&H analysis and design changes in an amendment to the Inglewood Project TIR. Submit a draft document for review and comment by the City.
- Incorporate City comments and finalize report.

E. Addendum to the construction contract documents

- Develop a construction addendum for the outfall redesign.
    - This addendum will include up to 5 plan sheets. Anticipated sheets includes:
        - 2 drainage plan and profile sheets
        - 2 demo and TESC sheets
        - 1 detail sheet
    - A separate engineer's estimate and bid schedule for this work will be developed.
    - Applicable special provisions for this work will be compiled and provided to supplement the existing construction contract.
    - OCI will submit draft and final PS&E to the City and incorporate one round of comments.
    - This work includes up to two, two hour meetings with City and County staff.

F. Additional project management and meetings

- Addition project management budget is added to cover project status reporting and coordination with the City's PM throughout the extended project duration. Fee estimate assumes this work will occur December through February (2 months) and assumes up to 4 hours per month.
- Additional budget is added for up to two meetings, for two people, in Sammamish.

Exhibit 1

Osborn Consulting, Inc. - City of Sammamish Inglewood Neighborhood Drainage PS&E							
Firm		**OCI**					
Classification		**PIC/QA-QC**	**PM**	**PE**	**CADD**	**EIT**	
Hourly Rate		$183.04	$183.04	$124.10	$103.93	$93.07	Cost
Project Tasks		Hours Estimate					Estimate
A	Review ELST TIR and basin boundaries	0	1	3	0	6	$ 1,114
A	Site visit	0	3	3	0	3	$ 1,201
A	Confirm points of compliance and modeling scenarios with City	0	1	0	0	2	$ 369
A	Update basin boundaries / land use data	0	2	4	2	8	$ 1,815
A	Review flow control requirements	0	1	0	0	2	$ 369
A	Develop WWHM hydrologic model if needed to match durations	0	2	4	0	8	$ 1,607
A	Run hydrologic model for: Existing, Predeveloped, and Future	0	2	3	0	3	$ 1,018
B	Size Flow control (if needed)	0	4	8	0	16	$ 3,214
C	Update hydraulic model to include proposed reroute and outfall	0	2	4	0	8	$ 1,607
C	Rerun hydraulic model for: Existing, Predeveloped, and Future	0	2	4	0	4	$ 1,235
D	documentation / memo - draft	1	4	6	2	8	$ 2,612
D	documentation / memo - Final	1	2	4	2	8	$ 1,998
E	Plan Sheets (5) Draft/Final	4	8	0	20	16	$ 5,764
E	Engineer's Estimate Draft / Final	1	4	0	0	8	$ 1,660
E	Special Provisions Draft/Final	1	4	0	0	4	$ 1,287
E	Up to two meetings	0	4	0	0	0	$ 732
F	Additional Project Management	0	8	0	0	0	$ 1,464
F	Additional Meetings	0	6	0	0	6	$ 1,657
	Total OCI	8	60	43	26	110	$ 30,723
X	Expenses	reproductions and/or mileage					$ 250
	Total Contract Supplement						**$ 30,973**

Authorization of amendment #7 will add $31,000.00 to the contract for a total contract value of $493,198.38.

Thanks,

Laura Ruppert
Vice President
Osborn Consulting, Inc.

Osborn Consulting Rate Sheet

PRIME Consultant:	Osborn Consulting, Inc.
Contract No.:	C2014-0128
Contract Title:	Inglewood Hill Stormwater Retrofit and Non-motorized Improvement Project

Mailing Address	1800 112th Ave NE, Suite 220E; Bellevue, WA 98004		
Contact Name	Laura Ruppert	**Phone**	425-451-4009
eMail Address	laura@osbornconsulting.com	**FAX**	425-451-4901

- ☐ Rates are based on lowest audited FAR (Federal Audited Rate).
- ☐ Rates are based on documented actual costs.
- ☐ WSDOT Safe Harbor In-direct Cost Rate
- ☐ Market Rate (Not for professional services)
- ☑ All Inclusive Rate

Amendment #:
Overhead Rate:
Profit %:
Rate Multiplier:

Instructions: Hourly base rate should be two decimal points only.

Staff Name	Title	Hourly Base Salary Rate	Hourly All-Inclusive Billing Rate
Tarelle Osborn	Principal		$ 183.04
Laurie Thomsen	Senior Engineer		$ 183.04
Laura Ruppert	Senior Engineer		$ 183.04
Robert Parish	Senior Engineer		$ 183.04
Tom Spangenberg	Senior Modeler		$ 183.04
Richard Herrman	CADD Manager		$ 155.12
Joan Montgomery	Project Engineer		$ 145.81
Deepa Mungasavalli	Project Engineer		$ 139.61
Diana Hasegan-Dan	Project Engineer		$ 139.61
Ann Bryant	Project Engineer		$ 139.61
Alison Sparks	Project Engineer		$ 124.10
Jeff Roeser	Project Engineer		$ 124.10
Joshua Van Wie	Project Engineer		$ 124.10
Janina Glovatchi	Project Engineer		$ 120.99
Jana Hindman	Engineer in Training (EIT)		$ 110.14
Travis Franklin	CADD Tech		$ 103.93
Yvonne York	Administration		$ 94.00
Chang Liu	Engineer in Training (EIT)		$ 93.07
Yang Dillon Li	Engineer in Training (EIT)		$ 93.07
Erika Costelloe	Administration		$ 89.19
FNU Indulekshmi	Engineer in Training (EIT)		$ 89.00
Madison Dreiger	Administration		$ 75.00
Sheila Polonis	Administration		$ 75.00

Exhibit 1

COUNCIL MINUTES

Regular Meeting

November 1, 2016

Mayor Don Gerend called the regular meeting of the Sammamish City Council to order at 6:30 pm.

Councilmembers present:
Mayor Don Gerend
Deputy Mayor Ramiro Valderrama
Councilmember Tom Hornish
Councilmember Kathy Huckabay
Councilmember Bob Keller
Councilmember Christie Malchow
Councilmember Tom Odell

Staff present:
Lyman Howard, City Manager
Jessi Bon, Deputy City Manager
Aaron Antin, Finance/IT Director
Angie Feser, Parks & Recreation Director
Steve Leniszewski, Public Works Director
Cheryl Paston, Deputy Public Works Director
Tawni Dalziel, Senior Stormwater Program Manager
Mike Kenyon, City Attorney
Melonie Anderson, City Clerk

Roll Call/Pledge of Allegiance

Roll was called. Councilmember Malchow led the pledge.

Deputy Mayor Valderrama remarked on the passing of former 45th District State Representative Andy Hill.

Approval of Agenda

MOTION: Deputy Mayor Valderrama moved to approve the agenda. Councilmember Malchow seconded. Motion carried unanimously 7-0.

Student Liaison Report

Eastlake School Liaison – Tyler Zangaglia
Homecoming was last month and was very successful.

Presentations/Proclamations - None

Public Comment

Lynn & Donna Luepnitz, 238 208th Ave NE, showed a PowerPoint presentation regarding the Local Improvement District (LID) being proposed for the Tamarack Neighborhood. They personally have not had any drainage issues and cannot afford to pay for an LID.

Todd Southwick, 413 209th Avenue SE, spoke regarding the drainage issues in the Tamarack area. He feels the City created the drainage issues by allowing too much development. For this reason, the City should pay to fix the problems.

Michael Schneider, 22120 NE 13th Place, Representing Imagine Housing, spoke in spoke of raising parity goals for eastside cities for their ARCH contributions. He proposed that the City consider committing to $200,000 in funding this year.

Deb Sogge, Representing the Sammamish Chamber of Commerce, she thanked the Council for proclaiming November 26, 2016 as Small Business Saturday.

Susanne Scholl, 416 208th Avenue SE, spoke regarding the dangerous traffic issues created by the water running down Thompson Hill Road.

Thomas Stagg, 23236 SE 47th Way, encouraged Council to take the pledge to increase their contribution to ARCH.

Mary Wictor, 408 208th Avenue NE, spoke regarding silt and runoff created by development in Louis Thompson Basin.

Paul Stickney, 504 228th Avenue SE, spoke regarding traffic and the Town Center EIS. He feels the trip numbers are inaccurate.

Executive Session – Potential Property Acquisition pursuant to RCW 42.30.110(1)(b)

Council retired to Executive Session at 7:09 and returned at 7:30. No action was taken.

Consent Agenda

Payroll for period ending October 15, 2016 for pay date October 20, 2016 in the amount of $ 346,835.34
Approval: Claims For Period Ending November 1, 2016 In The Amount Of $1,088,470.81 For Check No. 45695 Through 45812
Proclamation: Small Business Saturday
Resolution: Adopting The City Of Sammamish Employee Salary Schedule For Fiscal Year 2017 (/R2016 - 702)
Resolution: Amending Resolution R2015-655 The City's Master Fee Schedule (R2016 - 703)
Resolution: Establishing Medical Insurance Premium Contribution Rates For Fiscal Year 2017 (R2016-704)
Resolution: Accepting The Sammamish Landing Parking And Pedestrian Access Improvements As Complete/Pellco (R2016-706)

Contract: Elevator Maintenance/Eltec
Approval: Minutes for October 11, 2016 Special Joint Meeting

MOTION: Councilmember Huckabay moved to approve the Consent Agenda. Deputy Mayor Valderrama seconded. Motion carried unanimously 6-0 with Councilmember Hornish abstaining.

Public Hearing
Ordinance: Second Reading Amending Title 14, Public Works Standards Of The Sammamish Municipal Code By Amending Chapter 14.01, Public Works Standards Adopted

Public Works Director Steve Leniszewski gave the staff report. The documents needed some formatting revision work and will be brought back to Council at a future meeting. Staff has responded to Council and Master Builder's Association's questions.

Public Hearing opened at 7:36 pm.

David Hoffman, Representing the Master Builders, he gave Council a handout regarding some setback revisions that they are proposing for the Public Works Standards update (No copy was submitted for the public record).

Mary Wictor, (spoke previously), spoke regarding concerns over requiring sidewalk, curb and gutters when improving streets. She feels that it will add to surface water runoff. She also thinks that it is important to have soft surface trails.

Public hearing was continued to November 15, 2016 at 7:43 pm.

Ordinance: First Reading Storm and Surface Water Management Comprehensive Plan

Mr. Leniszewski introduced Deputy Public Works Director Cheryl Paston and Senior Stormwater Manager Tawni Dalziel. The City held four meetings and a public hearing to consider the plan with the Planning Commission. The Planning Commission is recommending the plan unanimously. Staff has added an additional action of monitoring the streams, bogs and wetlands. Staff will return at a later date with costs for several different monitoring plans.

Public hearing opened at 7:46 pm

Jan Bird, 3310 221st Avenue SE, encouraged Council to adopt the enhanced levels of service included in the plan.

Sharon Steinbus, 24933 SE 14th St, spoke in support of both the stormwater plan and the budget necessary to support and implement it.

Mary Wictor, spoke previously, would like automatic rain gauges installed in various areas. She also encouraged the City to partner with King County Hydrology, Sammamish Plateau Water, Redmond and Issaquah to share their resources. She would like to see funding for more stormwater staff.

Public Hearing was continued to November 15, 2016 at 7:54 pm.

Councilmember Odell asked if current water quality monitoring reports are available. Ms. Dalziel reported that the report is on the website. She also explained why Sammamish does not have any streams in the regional monitoring program. Staff intends to come back to Council with a monitoring program for streams, wetlands, and lakes, other than Pine or Beaver Lake.

Councilmember Keller would like to see water quality testing for the wetland areas as part of the monitoring program.

Deputy Mayor Valderrama ask when the City will be able to prioritize the stormwater projects and will this plan help do that. Ms. Paston explained that, to some extent, the projects are prioritized as part of the 6-Year Transportation Plan projects.

City Manager, Lyman Howard explained that the 5% increase in stormwater fees will be able to support the enhanced monitoring plan.

Staff hopes to have the results of the surface water rate study before the end of 2017.

The next three items were considered together. Finance Director Aaron Antin, along with Deputy Director Jessi Bon, gave the staff report and showed a PowerPoint presentation *(available on the City's website at www.sammamish.us).*

Ordinance: First Reading Making A Declaration Of Substantial Need For Purposes Of Setting The Limit Factor For The Property Tax Levy For The Fiscal Year 2017

Ordinance: Relating To The Levying Of Regular Property Taxes And Establishing The Amount To Be Levied In 2017 On The Assessed Valuation Of The Property Within The City.

Ordinance: First Reading Adopting The 2017-2018 Biennial Budget

The following changes are being recommended for the budget: (1) ARCH Trust Fund Contribution shall include $100,000 cash contribution, approximately $80,000 in fee waivers and approximately $20,000 in CDBG grants. Council agreed that the contribution should be looked at on a yearly basis and readjusted. (2) Increased funding for the Sammamish Heritage Society to $5,000 per year. (3) Friends of Lake Sammamish State Park to received $10,000 per year.

Additional changes since the last time the Council reviewed the budget include:
updated Transportation Plan/other timing and schedule ($0.1M), three additional Public Works positions recommended by the Transportation Committee ($0.6 M), increased communications funding in 2017 ($15,000) and increased Stormwater Rate by 5% income of $0.2 M for a total ending fund balance of $17.4 M.

Public Hearing for the ordinance making a declaration of substantial need for the purposes of setting the limit factor for the Property Tax Levy Rate for the Fiscal Year of 2017 opened at 8:54 pm and closed at 8:54 pm with no public comment.

Public Hearing relating to the levying of regular property taxes and establishing the amount to be levied in 2017 on the assessed valuation of the property within the City opened at 8:55 pm and closed at 8:55 with no public comment.

Public Hearing for the 2017-2018 Biennial Budget opened at 8:56 pm.

Public Comment:

Jan Bird, spoke previously, strongly agrees with the request for increased staffing. She believes this will allow the staff to be more proactive. She is also supportive of additional funding for parks property acquisition.

Sarah Baker, 1402 3rd Avenue, #1230, Seattle, Policy Associate with Housing Development Consortium, spoke supportively of the development of increased ARCH parity goals.

Mary Wictor, spoke previously, was supportive of the money being set aside for land acquisition. She was supportive of using easements rather than purchasing property for trails and utilities.

Public Hearing was continued to November 15, 2016.

Unfinished Business - None

New Business

Discussion: Parks, Recreation and Open Space (PRO) Plan Update Scope of work

Parks & Recreation Director Angie Feser gave the staff report and showed a PowerPoint presentation *(available on the City's website at www.sammamish.us)*

Deputy Mayor Valderrama feels that we should concentrate on trails and the level of service in our parks. He would like a visualization of how the plan will make the City look.

Councilmember Huckabay wants to make sure survey questions are asked about cultural art. She also wants to know how we will acquire and develop beach front parks. She would like to review the questions before the statistical survey is taken.

Councilmember Odell would like to see our Native American heritage included in the plan.

Councilmember Malchow hopes that the plan will identify areas of need.

Council Reports/Committee Reports

Councilmember Malchow reported that the outcomes tab from the last Virtual Town Hall is now available on the website. Viewers can see how the City is using the feedback provided by the Virtual Town Halls. The new, improved website has had a soft launch.

Councilmember Huckabay reported that there will be additional bus routes on #216 and #269 due to a funding increase in the King County budget.

Councilmember Hornish attended a meeting at Imagine Housing.

Deputy Mayor Valderrama said the Nightmare at Beaver Lake was very successful despite being closed for the first weekend due to storm warnings.

Councilmember Odell reported that the Transportation Committee met on October 19. He reported on the status of Central Washington University and the Mars Hill Church. He attended the Kokanee Work Group meeting. He reported on the Eastside Transportation Partnership meeting.

Mayor Gerend met with North End Mayors.

City Manager Report

Mr. Howard reminded Council that the meeting will start at 5:00 pm on November 8, 2016. Council agreed to cancel the last meeting in December.

Executive Session – Potential Property Acquisition pursuant to RCW 42.30.110(1)(b) and Potential Litigation pursuant to RCW 42.30.110(1)(i)

Council retired to Executive Session at 9:39 pm and returned at 10:11 pm. No action was taken.

Meeting adjourned at 10:11 pm

_____ _____

Melonie Anderson, City Clerk Donald J. Gerend, Mayor

COUNCIL MINUTES

Special Meeting

November 8, 2016

Mayor Don Gerend called the special meeting of the Sammamish City Council to order at 5:00 pm.

Councilmembers present:
Mayor Don Gerend
Deputy Mayor Ramiro Valderrama (left at 7:14 pm)
Councilmember Tom Hornish
Councilmember Kathy Huckabay
Councilmember Bob Keller
Councilmember Christie Malchow
Councilmember Tom Odell

Staff present:
Lyman Howard, City Manager
Jessi Bon, Deputy City Manager
Jeff Thomas, Community Development Director
David Pyle, Community Development Deputy Director
David Goodman, Management Analyst
Doug McIntyre, Senior Planner
Angie Feser, Parks & Recreation Director
Anjali Meyer, Senior Parks Project Manager
Steve Leniszewski, Public Works Director
Cheryl Paston, Public Works Deputy Director
Tawni Dalziel, Public Works Senior Stormwater Program Manager
David Linehan, Assistant City Attorney
Lita Hachey, Deputy City Clerk

Roll Call/Pledge of Allegiance

Roll was called. Councilmember Keller led the pledge.

Approval of Agenda

MOTION: Councilmember Huckabay moved to approve the agenda. Councilmember Odell seconded. Motion carried unanimously 7-0.

Executive Session – Potential Litigation pursuant to RCW 42.30.110(1)(i)
City Council retired to an Executive session at 5:03 pm and returned at 5:13 pm with no action.

Public Comment

Jeff Peterson, 9720 NE 120th Pl, Ste. 100, Bellevue, WA, Toll Brothers, spoke regarding the Rose Terrace Final Plat.

Paul Stickney, 504 228th Ave SE, spoke regarding traffic in Sammamish and questioned the Environment Impact Statement (EIS) document for the Town Center and the trip levels submitted. He presented a solution to Council and would like to meet with the City Council to discuss the plan.

Mary Wictor, 408 208th Ave NE, spoke regarding landslide hazards *(showed a presentation, available upon request to the City Clerk, manderson@sammamish.us)*

Jaudish Purvadi, 22323 SE 20th Street, spoke about the properties he owns on 244th Ave NE. He and his neighbors are requesting a zoning change from R1 to R4. He would like these changes incorporated in the comprehensive (comp) plan.

Starke Shelby, 2256 244th Ave NE, He is a part of the group of property owners applying for the R4 zoning change. Submitted a letter from King County for Council to review. *(Available upon request to the City Clerk, manderson@sammamish.us)*

Mel Melkoft, (representing Michael Seals, at this address) 2880 244th Ave NE, submitted letter for Council to review. *(Available upon request to the City Clerk, manderson@sammamish.us)*

Kerrit Rhinehart, 2824 244th Ave NE, homeowners requesting a zoning change from R1 to R4.

Joli Imperatori, 745 2nd Ave, Issaquah, spoke about the property she owns on 244th Ave NE. She would like a zoning change included in the Comprehensive plan amendments. It would be more efficient if all the neighbors did this at one time.

Mary Wictor, 408 208th Ave NE, spoke earlier, spoke regarding the presentation by McKenna Dorman on October 18th Regular Meeting. Submitted a document to Council regarding for review. *(Available upon request to the City Clerk, manderson@sammamish.us)*

Consent Agenda

Payroll for period ending October 31, 2016 for pay date November 4, 2016 in the amount of $ 352,061.42
Contract: Skyline High School Sports Field Turf Replacement Design/DA Hogan/Interlocal Agreement with Issaquah School District

Resolution: Granting Final Plat Approval Of The Plat Of Pinnacle At Inglewood Hill (R2016-706)
MOTION: Deputy Mayor Valderrama moved to approve the Consent Agenda, and Councilmember Odell seconded. Motion was approved unanimously 7-0.

New Business

Discussion: Comprehensive Plan Amendments – Housing Element

Jeff Thomas, Community Development Director, Doug McIntyre, Senior Planner, Arthur Sullivan, Program Manager with ARCH and Deborah Munkberg, Consultant with 3 Square Blocks Consultants, gave a staff

update and lead a discussion about the Housing Elements of the Comprehensive plan amendments. *(showed a presentation available on the Sammamish website at www.sammamish.us)*

Mr. Thomas stated that this presentation is the latest step to comply with the Growth Management Hearings Board (GMHB) order from June of this year. The City will need to respond by December 9, 2016 and tonight staff will present the Planning Commission and Staff proposed changes. Next week will be first reading of the ordinance and public hearing, followed by a seconded reading on December 6th.

Mayor Gerend proposed delaying this decision to give staff time to address those homeowner requests given here tonight. Mr. McIntyre stated that the deadline must be made by the December 9th to remain compliant with the Growth Management Act (GMA).

Discussion: 2017 Comprehensive Plan Amendment Docket

Jeff Thomas, Community Development Director and David Goodman, Community Development Management Analyst, gave a staff update and lead a discussion about the 2017 Comprehensive Plan Amendment Docket. *(showed a presentation available on the Sammamish website at www.sammamish.us)*

Jeff Thomas did a brief explanation of how the docket process works. The purpose of the docket is to decide which proposals goes on the staff 2017 work program and if they warrant being approved. City staff will do a full analysis of the applications and then the Planning Commission will do an additional review. The Commission will then make their recommendations to City Council and hold a Public Hearing. Council will then decide which docket item will be added to staffs work program.
The Growth Management Act (GMA) regulates that a City can only amend a Comprehensive Plan once a year, with a limited number of exceptions like the adoption of a new area sub-basin plan. Councilmember Keller would like a high level policy discussion on up-zoning from R1 to R4 in all areas before making decisions for the docket.
Councilmember Huckabay would like to talk about the interim zoning at a future date, perhaps at the City Council retreat in January 2017.

Planning Commission Handoff: Surface Water Design Manual and Low Impact Development Code Update

Steve Leniszewski, Public Works Director, introduced Frank Blau, Planning Commission Chair, who gave an overview of the Surface Water Design Manual and Low Impact Development Code Update. Cheryl Paston, Deputy Director of Public Works and Tawni Dalziel, Senior Stormwater Manager assisted with questions from Council. *(showed a presentation available on the Sammamish website at www.sammamish.us)*

Council Reports/Committee Reports

Councilmember Malchow attended the November 7th Citizens for Sammamish meeting and gave a presentation on the Town Center. She will be attending a Public Safety Committee and on November 9th and a Communications Committee meeting on the 10th. Councilmember Malchow introduced the following motion to Council.

MOTION: Councilmember Malchow moved to direct the City Manager, in an expedited fashion, to bring to the Planning Commission the study of new code language that would include buffers from certain road classifications as a means to preserve or add trees along our City's roadsides as to enhance the city character. In addition, Planning Commission would also study and offer new code language to include buffers when moving from one residential zoning area (such as R1) to another (such as R4) to protect neighborhood character when transitions occur with new development. Councilmember Odell seconded.

Councilmember Huckabay asked if this motion would apply only on certain streets and not all streets. Councilmember Malchow stated it would only be with new development. Councilmember Keller would like to include more direction into the motion.

AMENDMENT TO MOTION: Councilmember Keller moved to amend the motion to allow flexibility in the Planning Commission to investigate other avenues. Councilmember Malchow seconded. Motion to amend carried unanimously 7-0.

MAIN MOTION: Motion carried as amended unanimously 7-0.

City Manage Howard stated that this work can be introduced to the Planning Commission in December, continue it in January, then bring a recommendation back to the City Council.

Deputy Mayor Valderrama thanked all Washington State voters.

Councilmember Odell attended a Transportation Committee meeting on Friday, November 4th. He will be meeting with Redmond Mayor John Marchione on November 17th to discuss our transportation differences. The Eastside Transportation Partnership will be addressing their legislative statement at the meeting on Friday, November 18th. He will follow-up with Council.

Councilmember Hornish attended a Human services meeting last week and discussed the continuation of the needs assessment.

Councilmember Huckabay discussed the Virtual Town Hall. This Thursday, she and Tom Odell are attending a METRO meeting. METRO Service Manager, Bill Bryan will tour around Sammamish with them so they can show him the challenges the City faces. She will attend a Regional Transit Committee workshop on Thursday to discuss the latest striker amendment.
She discussed the flooding on Louis Thompson Hill Road and the Tamarack storm drainage plan. Ms. Huckabay proposed the following motion to Council and noted that the Stormwater program has received grants totaling $851,000.00.

MOTION: Councilmember Huckabay moved that the draft 2017-2018 Budget document be amended to show that the contribution from Tamarack owners will be $0.00, but with an asterisk noting that their contribution will not be determined until after the Zackuse Creek Basin Study and any required valuation studies are complete, and upon the further understanding that City funding is contingent upon the Tamarack property owners' granting, at no cost to the City, of all property rights necessary to facilitate the project as designed. Councilmember Odell seconded. Motion carried unanimously 6-0.

Malchow asked for clarification on how much money would remain in the budget. This will be a placeholder of sorts in the budget for public right-of-way projects, like Louis Thompson Road.

Councilmember Keller stated that the Public Issues Committee (PIC) will be meeting this week. Eastside Fire and Rescue will also be meeting this week. The Principal's Round-Table was held this week in Sammamish City Hall with eleven principal's attending. All area schools could discuss the drug-free coalition issues. He plans to compile the comments made for further use of all those attending and to City Council.

Mayor Gerend attended the Mayor's Round Table on heroin and prescription opioids addiction. He will provide a written report later.

City Manager Report

City Manager Lyman Howard spoke regarding the Issaquah Summit and stated that Council is invited to attend.

Meeting adjourned at 7:35 pm

_____ _____

Lita Hachey, Deputy City Clerk Donald J. Gerend, Mayor

City Council Agenda Bill

Meeting Date: **December 6, 2016** Date Submitted: 11/30/2016

Originating Department: Public Works

Clearances:

- ☑ Attorney
- ☐ Admin Services
- ☑ City Manager
- ☐ Community Development
- ☐ Finance & IT
- ☐ Parks & Recreation
- ☐ Public Safety
- ☑ Public Works

Subject: 2016 Surface Water Design Manual and Sammamish Addendum Update

Action Required: Conduct Public Hearing and adopt the 2016 King County Surface Water Design Manual and Sammamish Addendum

Exhibits:
1. 2016 King County Surface Water Design Manual and Sammamish Addendum Ordinance
2. Response to Council Comments

Budget: Not Applicable

Summary Statement

Public Works requests that a Public Hearing and First Reading of the 2016 King County Surface Water Design Manual (KCSWDM) and associated Sammamish Addendum be held and that the Ordinance be adopted.

The 2016 KCSWDM and associated Sammamish Addendum replaces the 1998 KCSWDM, the 2009 KCSWDM, and Sammamish Addendum which are collectively the City's current surface water design standards. Approval of this Ordinance by December 31, 2016, will ensure the City remains in compliance with its National Pollutant Discharge Elimination System (NPDES) permit.

Background

On November 1, 2016, the City of Sammamish Planning Commission recommended that the City Council adopt the 2016 KCSWDM and associated Sammamish Addendum. Staff presented further details and answered questions on the 2016 KCSWDM update in a City Council Study Session on November 15, 2016.

In order to comply with City's NPDES permit, the City must revise its surface water design standards so that they are at least equivalent to Ecology's 2012 Stormwater Management Manual for Western Washington. The 2016 KCSWDM and Sammamish Addendum accomplishes these requirements provided that they are adopted via code amendment by **December 31, 2016.**

Further information on the NPDES Permit can be found at:
http://www.ecy.wa.gov/programs/wq/stormwater/municipal/phaseIIww/wwphiipermit.html

The 2016 KCSWDM can be found at:
http://www.kingcounty.gov/services/environment/water-and-land/stormwater/documents/surface-water-design-manual.aspx

Financial Impact
There are no direct financial impacts associated with adoption of the 2016 King County Surface Water Design Manual and the Sammamish Addendum.

Recommended Actions
Conduct a Public Hearing and first reading of the 2016 King County Surface Water Design Manual and Sammamish Addendum Ordinance and motion to approve the Ordinance adopting the same on December 6, 2016.

Exhibit 1

CITY OF SAMMAMISH
WASHINGTON

ORDINANCE NO. O2016 - ___

AN ORDINANCE OF THE CITY OF SAMMAMISH, WASHINGTON, RELATED TO SURFACE WATER MANAGEMENT; AMENDING TITLE 13 OF THE SAMMAMISH MUNICIPAL CODE; ADOPTING THE 2016 KING COUNTY SURFACE WATER DESIGN MANUAL AND SAMMAMISH ADDENDUM THERETO; PROVIDING FOR SEVERABILITY; AND ESTABLISHING AN EFFECTIVE DATE

WHEREAS, the City of Sammamish has adopted the best management practices from the King County Surface Water Design Manual ("KCSWDM") to regulate the design, construction, inspection and maintenance of stormwater facilities in order to prevent pollution, flooding, and other dangers related to stormwater and drainage problems; and

WHEREAS, the City has also adopted addenda to the KCSWDM that amend portions of the County standards to better reflect the local conditions and policies of the City of Sammamish; and

WHEREAS, Title 13 of the Sammamish Municipal Code ("SMC") contains regulations for surface water management in the City consistent with the KCSWDM, as amended to suit local conditions and policies in the City;

WHEREAS, the City is subject to the National Pollutant Discharge Elimination System (NPDES) Phase 2 permitting requirements, which require, in part, that the City update the Surface Water Design Manual; and

WHEREAS, the King County Council adopted a new version of the KCSWDM on April 24, 2016 (the "2016 KCSWDM"); and

WHEREAS, the City desires to adopt the new 2016 KCSWDM and a City addendum thereto, and to amend SMC Title 13 to accurately implement the updated surface water management regulations contained in the 2016 KCSWDM and the City addendum (the "SWDM Update"); and

WHEREAS, the City desires to amend SMC Title 13 to accurately implement the SWDM Update ("Code Amendments"); and

WHEREAS, on November 9, 2016, a Determination of Non Significance was issued for the SWDM Update in accordance with Chapter 43.21C RCW, the State Environmental Policy Act; and

WHEREAS, on October 27, 2016, a copy of the SWDM Update was transmitted to the Washington State Department of Commerce ("Commerce") in accordance with RCW 36.70A.106, and Commerce granted expedited review on November 7, 2016; and

WHEREAS, the Planning Commission held public hearings on the SWDM Update on September 15, 2016 and October 6, 2016, and recommended approval of the SWDM Update to the City Council on November 8, 2016; and

WHEREAS, the City Council held a public hearing on the SWDM Update at a regular meeting thereof on December 6, 2016, and has considered the Planning Commission's recommendation, public comment, and other available information relevant thereto;

NOW, THEREFORE, THE CITY COUNCIL OF THE CITY OF SAMMAMISH, WASHINGTON, DO ORDAIN AS FOLLOWS:

Section 1. Repealer. All prior versions of the King County Surface Water Design Manual and any addenda thereto previously adopted by the City of Sammamish are hereby repealed in their entireties.

Section 2. Repealer. City of Sammamish Resolution No. R2013-559, Section 1, is hereby repealed in its entirety, and City of Sammamish Resolution No. R2010-430 and Ordinance No. O2016-417 are hereby repealed in their entireties.

Section 3. Surface Water Design Manual, Adopted. The 2016 King County Surface Water Design Manual published by the King County Department of Natural Resources and Parks on April 24, 2016, together with the City of Sammamish Addendum (as set forth in **Attachment A**) to the 2016 King County Surface Water Design Manual (http://kingcounty.gov/services/environment/water-and-land/stormwater/documents/surface-water-design-manual.aspx), (collectively, the "SWDM") are hereby adopted by this reference as though fully set forth herein. A copy of the SWDM shall be kept on-file with the City Clerk.

Section 4. SMC 13.10, Definitions, Amended. Sammamish Municipal Code Chapter 13.10, "Definitions," is hereby amended to read as set forth in **Attachment B**, which is incorporated herein by this reference.

Section 5. SMC 13.20, Surface Water Runoff Regulations, Amended. Sammamish Municipal Code Chapter 13.20, "Surface Water Runoff Regulations," is hereby amended to read as set forth in **Attachment C**, which is incorporated herein by this reference.

Section 6. Severability. Should any section, paragraph, sentence, clause or phrase of this Ordinance, or its application to any person or circumstance, be declared unconstitutional or otherwise invalid for any reason, or should any portion of this Ordinance be pre-empted by state or federal law or regulation, such decision or pre-emption shall not affect the validity of the remaining portions of this Ordinance or its application to other persons or circumstances.

Section 7. Effective Date. This ordinance shall be published in the official newspaper of the City, and shall take effect and be in full force on January 1, 2017.

ADOPTED BY THE CITY COUNCIL AT A REGULAR MEETING THEREOF ON THE _____ DAY OF DECEMBER, 2016.

CITY OF SAMMAMISH

_____
Donald J. Gerend Mayor

ATTEST/AUTHENTICATED:

_____
Melonie Anderson, City Clerk

Approved as to form:

_____
Michael R. Kenyon, City Attorney

Filed with the City Clerk:	
Public Hearing:	September 15, 2016
Public Hearing:	October 6, 2016
First Reading:	December 6, 2016
Public Hearing:	December 6, 2016
Second Reading:	December 13, 2016
Passed by the City Council:	
Date of Publication:	
Effective Date:	January 1, 2017

ATTACHMENT A:

SAMMAMISH ADDENDUM TO THE
2016 KING COUNTY SURFACE WATER DESIGN MANUAL

CITY OF SAMMAMISH
SURFACE WATER DESIGN MANUAL ADDENDUM

PREFACE – How to Use this Document

General Introduction

~~This document was prepared for the City of Sammamish to meet the requirements of the NPDES Phase 2 permit to develop, implement, and enforce a program to reduce pollutants in stormwater runoff from new development, redevelopment and construction site activities. Per the NPDES permit, this program applies to all sites that disturb a land area 1 acre or greater (the NPDES regulatory threshold), including projects less than one acre that are part of a larger common plan of the development or sale. The program applies to private and public development, including roads.~~

The City of Sammamish has adopted the ~~2009~~ 2016 King County Surface Water~~-~~ Design Manual (~~2009 KCSWDM~~2016 KCSWDM) in order to be in compliance with the Washington State Department of Ecology~~its~~ Phase II Municipal Stormwater permit. This Addendum to the ~~2009 KCSWDM~~2016 KCSWDM defines how the requirements of the KCSWDM are to be implemented within the City of Sammamish. The Addendum specifies all changes, additions, and deletions to the ~~2009 KCSWDM~~2016 KCSWDM to make it appropriate for use within the City of Sammamish. The ~~2009 KCSWDM~~2016 KCSWDM along with this Addendum define the drainage requirements for development and redevelopment projects within the City.

~~Ecology has allowed local jurisdictions to follow previous stormwater requirements for projects disturbing less than one acre. The City has elected to continue their previous practice of applying the requirements of the 1998 King County Surface Water Design Manual (1998 KCSWDM) to those projects disturbing less than the required threshold (1 acre).Which Manual should be usedIf your project will disturb less than acre and is not part of a larger common plan or sale, then use the 1998 KCSWDM in conjunction with the applicable sections of this addendum. If your project proposes to disturb more than 40,000 sq ft but less than an acre, then a pre-construction on-site inspection is required to review the proposed clearing limits, and a post construction survey is required to certify that less than an acre was disturbed.Projects that propose to disturb over an acre shall use the 2009 KCSWDM in conjunction with this addendum.~~

Purpose of and Need for the Addendum

The City has been issued a Phase II Municipal Stormwater Permit (Permit) effective ~~February 16, 2007~~August 1, 2013. The Permit was issued under the National Pollutant Discharge

~~Elimination~~ System (NPDES), as administered by the Washington State Department of Ecology (Ecology) within Washington State. The Permit specifies minimum requirements and technical thresholds for stormwater mitigation needed for construction sites, new developments, and redevelopments.

~~Ecology prepared the 2005 Stormwater Management Manual for Western Washington to provide technical guidance to control the quantity and quality of stormwater runoff from new developments and redevelopments. Ecology has revised many of the BMPs from the 2005 SWMMWW to improve their effectiveness for protecting water quality and to meet the intent of the anti-degradation provisions of the water quality standards. The measures included in the Ecology manual are considered necessary to comply with state water quality standards and protect beneficial uses. In addition, Ecology revised the 2005 SWMMWW to include low impact development (LID related definitions, requirements and an LID performance standard. If a jurisdiction adopts the 2005 Ecology manual or equivalent manual as approved by Ecology, they will meet one of the requirements of their NPDES permit. Adopting the 2012 Ecology manual, or equivalent manual, also supports the new LID requirements in NPDES Permit.~~

The City of Sammamish has previously relied upon the earlier versions of the KCSWDM to guide stormwater ~~mitigation~~ standards within the City. King County recently updated its manual to be consistent with the ~~2005~~ 2012 Ecology manual. Ecology has deemed the ~~2009~~2016~~–~~ KCSWDM and associated requirements to be equivalent to the ~~2005~~ 2012 Ecology Manual.~~–~~ By adopting the ~~2009 KCSWDM~~2016 KCSWDM and addressing the associated requirements, the City will be in compliance with the NPDES requirements that rely on the Ecology manual or approved equivalent.

The purpose of this Addendum is to tailor the 2016 KCSWDM to meet the unique conditions within the City, and be consistent with the City's codes, organization and processes. No substantive changes have been made to the 2016 KCSWDM in order to maintain equivalency in requirements and the level of protection provided by the 2016 KCSWDM.

Relationship of the KCSWDM and the City of Sammamish ~~Low Impact~~ Development ~~(LID)~~ Code to Low Impact Development (LID)

~~The City of Sammamish recently adopted low impact development code amendments. The 2009 KCSWDM encourages LIDthrough careful site planning to limit disturbance of native vegetation and it also requires consideration of specific LID techniques to reduce runoff from developed sites. The KCSWDM provides specific design guidance for implementation of the measures encouraged in the City's LID code. As a result, the 2009 KCSWDM and the City of Sammamish LID ordinance complement each other.~~

The City of Sammamish recently adopted development code amendments that encourage Low Impact Development (LID) principles to reduce impervious surfaces, retain native vegetation, and reduce runoff from developed sites. The 2016 KCSWDM requires on site flow control best management practices (BMPs) to mitigate the impacts of storm and surface water runoff generated by new impervious surfaces, new pervious surfaces, existing impervious surfaces, and replaced impervious surfaces. Flow control BMPs are methods to disperse, infiltrate, or otherwise reduce or prevent development related increases in runoff at or near the sources of those increases. The 2016 KCSWDM provides specific design guidance for implementation of the LID measures encouraged in the City's development code. As a result, the 2016 KCSWDM and the City of Sammamish development code complement each other.

How to Use this Document

This Addendum shall be used in coordination with the ~~2009 KCSWDM~~2016 KCSWDM for the following:

- To translate specific wording or reference from King County to the City.
- To cross-reference City ordinances and City maps in lieu of King County ordinances and maps.
- To provide a linkage or reference to other City requirements such as more restrictive requirements outlined in basin plans and the City's Critical Areas Ordinances.
- To provide exceptions and additions to the KCSWDM.

The ~~2009 KCSWDM~~2016 KCSWDM shall be used in its entirety except as directed in this Addendum. Exceptions and additions to the ~~2009 KCSWDM~~2016 KCSWDM are organized and referenced by chapter and section in the same manner as the ~~2009 KCSWDM~~2016 KCSWDM. Some global changes are provided in this preface, which shall be applied throughout the entire ~~2009 KCSWDM~~2016 KCSWDM. The user shall override the maps and references to other documents as indicated within this Addendum.

Addendum Organization

The information presented in this Addendum is organized as follows:

- **Preface – How to use this Document:** This preface provides instructions for using the City of Sammamish's Addendum to the ~~2009 KCSWDM~~2016 KCSWDM.~~–~~ It also defines terms in the 2016 KCSWDM that are used differently for the City of Sammamish; City departments that are equivalent to county departments referred to in the 2016 KCSWDM; and designations from the 2016 KCSWDM that do not apply to proposals in the City of Sammamish.

- **Chapter 1 – Drainage Review and Requirements:** The City of Sammamish has made several ~~minor~~ changes to Chapter 1 of the ~~2009 KCSWDM~~2016 KCSWDM. This Addendum provides replacement and supplemental text for specific sections of Chapter 1. Apart from these changes, the King County version of Chapter 1 applies ~~for~~ to proposals in the City of Sammamish.

- **Chapter 2 – Drainage Plan Submittal**: The City of Sammamish has made minor changes to Chapter 2 of the ~~2009 KCSWDM~~2016 KCSWDM. Section 2.4.2 has been modified to include an additional requirement for the inspection of installed LID BMPs. The King County version of Chapter 2 applies ~~for~~ to proposals in the City of Sammamish, except that the applicant shall refer to the City of Sammamish documents for technical submittal requirements, project plan requirements, and as-built requirements.

  ~~G.~~ **Chapter 3 – Hydrologic Analysis and Design**: The City of Sammamish has made no changes to Chapter 3 of the ~~2009 KCSWDM~~2016 KCSWDM. The King County version of Chapter 3 applies ~~for~~ to proposals in the City of Sammamish. ~~This Addendum to Chapter 3 provides guidance on the application of the various flow control standards specified in the 2009 KCSWDM.~~

- **Chapter 4 – Conveyance System Analysis and Design**: The City of Sammamish has made ~~no~~ minor changes to Chapter 4 of the ~~2009 KCSWDM~~2016 KCSWDM. More stringent requirements for allowable pipe materials, deflection, maximum distance between structures, and other requirements are listed in the City of Sammamish Addendum. Apart from these changes, the King County version of Chapter 4 applies to proposals in the City of Sammamish. ~~The addendum to Chapter 4 provides replacement text for the sections that are changed. Apart from these changes, The the King County version of Chapter 4 applies for to proposals in the City of Sammamish.~~

- **Chapter 5 – Flow Control Design**: The City of Sammamish has made very minor changes to Chapter 5 of the ~~2009 KCSWDM~~2016 KCSWDM. This addendum to Chapter 5 provides replacement text for the sections that are changed. ~~–~~Design criteria for ponds have been added/modified to address pond aesthetics. ~~–~~Apart from these changes, the King County version of Chapter 5 applies to~~for~~ proposals in the City of Sammamish.

  The City of Sammamish has adopted a Low Impact Development Ordinance that encourages the use of LID site planning techniques within the City. LID site planning

techniquesapplications can be usedhelp to reduce the size of flow control facilities following the credits specifiedrequired in the 2009 KCSWDM2016 KCSWDM.

- **Chapter 6 – Water Quality Design**: The City of Sammamish has made minor changes to Chapter 6 of the 2009 KCSWDM2016 KCSWDM. This addendum to Chapter 6 provides replacement text for the sections that are changed. Apart from these changes, the King County version of Chapter 6 applies for to proposals in the City of Sammamish.

  The City of Sammamish amends Chapter 6 of the 2016 KCSWDM to allow for bioretention to be utilized as a pretreatment facility.

  The City of Sammamish requires higher levels of phosphorus removal for areas that drain to Beaver Lake and Pine Lakesome lakes based on specific studies. The 2009 KCSWDM2016 KCSWDM Addendum identifies the procedures to follow and the areas that are involved in higher levels of phosphorus removals.

- **Definitions:** The City of Sammamish has made changes to the definitions section of the 2009 KCSWDM2016 KCSWDM. This Addendum to the Definitions section provides replacement text for the definitions that are changed. Apart from these changes, the King County version of the Definitions Section applies for to proposals in the City of Sammamish.

  H

- **Appendices:** Appendices A, B, C, and D apply to proposals in the City of Sammamish.

- **References:** King County Reference sections 2, 3, 4B, 7C, 9, and 10 do not apply to the City of Sammamish. King County Reference sections 7B, 8F, 8G, 8I, 8J, 8K, 8L, 8M, 8N, 8O, 8P, 8Q have been replaced by a City of Sammamish reference. The King County version of Reference section 1, 4A, 4C, 4D, 5, 6[ED1], 7A and 8A through 8E, 8I, 11 apply to proposals in the City of Sammamish.

- **Appendices:** Appendix B does not apply to the City of Sammamish. Appendices A, C, and D apply to proposals in the City of Sammamish.

- **References:** King County Reference sections 2, 3, 4B 4D, 7C, 8M8N through 8Q, 9, 10, and 14B do not apply to the City of Sammamish. King County Reference sections 1, 4A, 4B, 7bB, 8G8D, and 8J, 8K, 8L through 8M have been replaced by a City of Sammamish reference. The King County version of Reference section 1, 4A, 4C 5, 6, 7Aand 8A through 8F8C, 8E, 8F, 8G,and 8I, 9, 11, and 14A apply to proposals in the City of Sammamish. New reference numbers 11 & 14 hashave been added.

City Equivalents for County Agencies

Unless the context requires otherwise, any reference to "County", "King County", or county department, shall refer to the City of Sammamish and any reference to county staff shall refer to the City Manager or designee, unless specifically referring to the Department of Community Development (DCD).

City Equivalents for County Ordinances

For proposals in the City of Sammamish, all reference in the KCSWDM to the following ordinances or municipal codes shall be replaced by reference as indicated in the following table.

King County Code (KCC)	Description	Sammamish Municipal Code (SMC)	Description
KCC 16.82	~~BUILDING AND CONSTRUCTIONSTANDARDS~~ Clearing and Grading	SMC 16.15	Clearing and Grading
KCC 21A.14	Development Standards Design Requirements	SMC 21A.25	Development Standards – Density and Dimensions
KCC 21A.24	Critical Areas	SMC 21A.50	Development Code – Environmentally Critical Areas
KCC 21A.06	Technical Terms and Land Use Definitions	SMC 21A.15~~.254~~	Definitions
KCC 20.14	Basin Plans	SMC 24.~~200~~20	Interim Comprehensive Plan – Basin Plans
KCC 25	Shoreline Management	SMC 25	Shoreline Management
KCC 9~~*~~	Surface Water Management	SMC 13 SMC 15.10	Surface Water Management Flood Damage Prevention

~~*Title 9 still applies to the City of Sammamish per Ordinance 099-17, and is supplemented with SMC 15.~~

In general, references to the King County Critical Areas Ordinance (KCC 21A) are to be replaced by reference to the Sammamish Municipal Code (SMC 21A), particularly, chapter SMC 21A.50,

Environmentally Critical Areas. Definitions for critical areas terminology may be found in SMC 21A.15. The following table provides– additional detail on critical areas.

King County Code (KCC)	Description	Sammamish Municipal Code (SMC)	Description
Title 2	Administration	20	Administrative Procedures, Environmental Policy
21A.24.230	Flood hazard area	21A.50.230 15.10	Frequently flooded areas Flood Damage prevention
21A.24.311 – 21A.24.314	Critical Aquifer recharge area	21A.50.280 21A.15.253	Critical aquifer recharge areas – Development standards and permitted alterations Definition
21A.24.~~230~~2 20	Erosion hazard area	21A.50.220 21A.50.225 21A.15.415 21A.15.417	Erosion hazard areas – Development standards and permitted alterations. Erosion hazards near sensitive water bodies – Special district overlay. Definition Erosion hazard areas Definition Erosion hazards near sensitive water body overlay
21A.24.280	Landslide hazard area / Landslide hazard drainage area	21A.50.260 21A.15.680	Landslide hazard area – Development standards and permitted alterations Definition
21A.24.290	Seismic hazard areas	21A.50.270 21A.15.1045	Seismic hazard area – Development standards and permitted alterations Definition
21A.24.310	Steep slope hazard areas	21A.15.1230 21A.15.1230	Definition. Steep slope hazard areas now included as part of landslide hazard areas. Definition

King County Code (KCC)	Description	Sammamish Municipal Code (SMC)	Description
21A.24.318 – 21A.24.345	Wetlands areas	21A.50.290 – ~~21A.50.320~~ 21A.15.1415	Wetlands - Development standards and permitted alterations Definition
21A.24.355 – 21A.24.381	Aquatic Areas	21A.50.330 – 21A.50.350	Streams
21A.24.~~383~~ 382 - 21A.24.388	Wildlife habitat conservation areas	21A.15.468 21A.50	Wildlife habitat conservation areas

City Equivalents for County Maps

For proposals in the City of Sammamish, all reference in the 2016 KCSWDM to the following maps shall be replaced by reference as indicated in the following table.

King County Map or Designation	City of Sammamish Map*
Flow Control Applications Map	**Flow Control Applications Map.** **Map included in Sammamish Addendum**
Landslide Hazard Drainage Areas Map	**Landslide Hazard Drainage Area Map.** **Map included in Sammamish Addendum**
Water Quality Applications Map	**Water Quality Applications Map.** **Map included in Sammamish Addendum**
Erosion Hazard Near Sensitive Water Bodies Map	**Erosion Hazard Near Sensitive Water Bodies Map** **Map included in Sammamish Addendum**
Flood Hazard Area as defined in KCC 21A.06	**Environmentally Sensitive Areas Map** Frequently flooded areas include all areas of special flood hazards within the jurisdiction of the City of Sammamish as defined in SMC 21A.~~50~~15.~~230~~ 532 and as shown on the Environmentally Sensitive Areas Map.
Erosion Hazard Area~~*~~	Definition provided in SMC 21A.~~50~~15.~~220~~415
Landslide Hazard Area~~*~~	Definition provided in SMC 21A.~~50~~15.~~260~~680
Critical Aquifer Recharge Area~~Landslide Hazard Drainage Area~~	Definition provided in SMC 21A.5015.280253~~Definition provided in SMC 21A.15.681~~

King County Map or Designation	City of Sammamish Map*
~~Critical Aquifer Recharge Area*~~	~~Definition provided in SMC 21A.50~~15.280~~253~~

~~* Maps are on the City's web site at~~
http://www.sammamish.us/departments/publicworks/Maps.aspx#~~http://www.ci.sammamish.wa.us/Maps.aspx.~~

City Equivalents for County Plans or Studies

In general, references to county-approved plans or studies in the 2016 KCSWDM are to be replaced by reference to appropriate City-approved plans or studies. If comparable City- approved plans or studies do not exist, then references to County-approved plans or studies shall be retained for proposals in the City of Sammamish.

County Designations that do not Apply in the City

The following designations are used in the ~~2009 KCSWDM~~2016 KCSWDM but are not currently used in the City of Sammamish; any reference in the 2016 KCSWDM to the existence of areas with these designation or thresholds or requirements for such areas is to be disregarded for proposals in the City of Sammamish:

- **Agricultural Project**
- **Coal Mine Hazard Area**
- **Forest Production Zone Area**
- **Master Drainage Plans (MDPs)**
- **Rural Residential Development**
- **Sensitive Area Folio -** refer to City of Sammamish Sensitive Areas Maps at http://www.sammamish.us/departments/publicworks/Maps.aspx# ~~http://www.ci.sammamish.wa.us/Maps.aspx~~
- **Stormwater Compliance Plans (SWCPs)**
- **Urban Planned Development**
- **Zoning Classifications:** The 2016 KCSWDM references to Agricultural (A) Zoning, Forest (F) Zoning, or Rural (R) Zoning are intended for areas outside of the Urban Growth Boundary; therefore, the City of Sammamish contains no equivalent zoning. Project proponents should refer to City zoning maps to determine which zoning classifications apply to their projects.

~~*Equivalency of the KCSWDM Relevant to the City of Sammamish*~~

~~Note that King County Code (KCC) Chapter 9.04 (Surface Water Runoff Policy) and the KCSWDM alone are not equivalent with the Ecology manual. In a letter to King County dated~~

~~February 19, 2008, Ecology identified additional requirements that a Phase II community needs to incorporate in order to be able to adopt the KCSWDM as an equivalent to the Ecology Manual. These other adopted requirements and the aspects of the Ecology manual or permit requirements that they address are listed in the following table. The table also identifies the equivalent City of Sammamish code or the requirement that needs be followed to obtain equivalency and be in compliance with the Permit.~~

~~Ecology Requirement~~	~~King County Code (KCC)~~	~~Sammamish Municipal Code (SMC) or Requirement~~
~~Construction erosion and sediment controls are required for all new and redevelopment projects, regardless of project size.~~	~~To meet this requirement, King County relies on KCC 16.82.095 Clearing and Grading to require erosion and sediment controls at all sites where a site is disturbed, regardless of whether a permit is required.~~	~~The City of Sammamish meets this requirement in SMC~~ ~~16.15.090 Clearing and Grading.~~
~~The application of construction erosion and sediment control requirements and the soil quality and depth best management practice (BMP) for flow control are not currently located in the 2016 KCSWDM.~~	~~These requirements are located in KCC 16.82 Clearing and Grading.~~	~~To meet this requirement, follow "BMP T5.13: Post-Construction Soil Quality and Depth" in the Ecology Manual, and provided herein as Reference 11.~~
~~The wetlands protection requirement (Minimum Requirement #8) is not contained in the 2016 KCSWDM,.~~	~~Wetland protection requirements are located in KCC 21A.24 Critical Areas.~~	~~The City of Sammamish meets this requirement in SMC 21A.50.290 through 21A.50.632.~~ ~~Wetland management area-Special district overlay is provided in 21A.50.322.~~ ~~Wetland definitions are proved in SMC 21A.15.1395 through 21A.15.1415.~~
~~Exemptions for treatment and flow control in rural areas (allowed for up to 4% total impervious area and 15% new pervious area).~~	~~Ecology approves the exemptions based on the County's rural area clearing restrictions in KCC~~ ~~16.82 Clearing and Grading.~~ ~~Buffer requirements are contained in KCC 21A.24 Critical Areas.~~	~~The City of Sammamish meets these requirements in SMC 16.15 and SMC 21A.50.~~

CHAPTER 1 – Drainage Review and Requirements

The City of Sammamish has made several minor changes to Chapter 1 of the ~~2009 KCSWDM~~2016 KCSWDM. This chapter provides replacement and supplemental text for specific sections of Chapter 1. Apart from these changes, the King County version of Chapter 1 applies for proposals in the City of Sammamish. The City's changes to the County document are as follows:

- **Key Terms and Definitions (page 1-1 of the ~~2009 KCSWDM~~2016 KCSWDM)** — Replace all references to KCC 21A with SMC 21A. In addition, the following changes to specific terms apply:

Term (page)	Action
Critical aquifer recharge area (p 1-2)	*Replace as follows per SMC 21A.15.253:* "Critical aquifer recharge areas" means those areas in the City of Sammamish with a critical recharging effect on aquifers used for potable water as defined by WAC 365-190-030(2). CARAs have prevailing geologic conditions associated with infiltration rates that create a high potential for contamination of groundwater resources or contribute significantly to the replenishment of groundwater. CARAs shall be classified based on the following criteria: (1) Class 1 CARAs include those areas located within the mapped one- or five-year capture zone of a wellhead protection area. (2) Class 2 CARAs include those areas located within the mapped 10-year capture zone of a wellhead protection area. (3) Class 3 CARAs include those areas outside wellhead protection areas that are identified as high aquifer recharge potential areas based on characteristics of surficial geology and soil types. (Ord. O2013-350 § 1 (Att. A); Ord. O2005-193 § 2)~~is the critical area designation that is applied to areas where extra protection of groundwater quantity and quality is needed because of known susceptibility to contamination and importance to drinking water supply. Such areas are delineated on maps provided by the City. See the "Definitions" section for more details.~~ Critical aquifer recharge areas are regulated in SMC 21A.50.280 Critical aquifer recharge areas – Development standards. Also mapped.~~–~~ See City's website
Critical Drainage Area (p 1-2)	*Replace as follows per SMC 21A.15.255:* "Critical drainage area" means an area that has been formally determined by the King County S~~s~~urface W~~w~~ater M~~m~~anagement D~~d~~epartment to require more restrictive regulation than countywide standards afford in order to mitigate severe flooding, drainage, erosion, or sedimentation problems that result from the cumulative impacts of development and urbanization. (Ord.O2003-132 § 10). Critical drainage areas are defined in SMC 21A.15.255 and are regulated in SMC 21A.50.355 Lake management areas – Special District overlay.

Term (page)	Action
Erosion hazard area (p 1-~~2~~3)	*Replace as follows per SMC 21A.15.415:* "Erosion hazard area" is the critical area designation that is applied to areas underlain by soils that are subject to severe erosion when disturbed. See the "Definitions" section for more details. Erosion hazard areas are regulated in SMC 21A.50.220 Erosion hazard areas – Development standards and permitted alterations.
Flood Hazard Area (p 1-3)	*Replace as follows per SMC 15 Flood Damage Prevention:* SMC 15 shall be the basis for establishing the areas of special flood hazard.
Landslide Hazard Area (p 1-~~3~~5)	*Replace as follows per SMC 21A 15.680:* "Landslide hazard area" is the critical designation that is applied to areas potentially subject to risk of mass movement due to a combination of geologic, topographic, and hydrologic factors~~to severe risk of landslide due to topography, soil conditions, and geology~~. See the "Definitions" section for more details. ~~Erosion~~Landslide hazard areas are regulated in SMC 21A.50.260 Landslide hazard areas – Development standards and permitted alterations.
Landslide Hazard Drainage Area (p 1-5)	*Replace as follows:* "Landslide hazard drainage area" are areas where overland flows pose a significant threat to health and safety because of their close proximity to a landslide hazard area as defined by SMC 21A.15.680. Mapped Landslide hazard drainage areas are approximate. Public Works may determine that areas not mapped as Landslide hazard drainage areas may meet this definition. ~~*Replace as follows: per SMC 21A.15.681*~~ ~~"Landslide hazard drainage area" means a specially mapped area where the City has determined thatare areas where overland flows from new projects will pose a significant threat to health and safety because of their close proximity to a landslide hazard area as defined by SMC 21A.15.680. Landslide hazard drainage areas are mapped in Appendix I and are approximate. Site specific information will be used to verify application to development projects.~~

• **Section 1.1.1 PROJECTS REQUIRING DRAINAGE REVIEW (page 1-~~9~~ 12 of the ~~2009 KCSWDM~~2016 KCSWDM)** — Replace the "King County Permits and Approvals" table with the following table and adding new numbers 7 and 8.

7. Projects located in landslide hazard drainage areas that will result in 500 square feet or more of new impervious surface.
8. Projects as listed in SMC 13.20.020.

City of Sammamish Permits and Approvals
Construction Permits Right of Way Permit Site Development Permits Conditional Use Permits Clear and Grade Permit

Shoreline Management Substantial Development Permits Short Subdivision Developments (Short Plat) Subdivision Developments (Plats) Commercial Site Development Permit (CSDP) Unified Zone Development Permit (UZDP) Plat Alterations
Notes: See SMC 20.05 – PROCEDURES FOR LAND USE PERMIT APPLICATIONS, PUBLIC NOTICE, HEARINGS, AND APPEALS for additional information.

- **Figure 1.1.2.A FLOW CHART FOR DETERMINING TYPE OF DRAINAGE REVIEW REQUIRED (page 1-14 of the 2016 KCSWDM)** — Amending Figure 1.1.2.A such that the first box reads:

  Is the project a **single family residential** or **agricultural project** that results in ≥2,000 sf of **new** plus **replaced impervious surface** or ≥7,000 sf of **land disturbing activity,** results in less than 5,000 square feet of new plus replaced pollution generating impervious surface, results in less than ¾ acre of pollution generating pervious surfaces, or is a project that results in 500 square feet or more of new impervious surface in a landslide hazard drainage area AND meets one of the following criteria:

- **Table 1.1.2.A REQUIREMENTS APPLIED UNDER EACH DRAINAGE REVIEW TYPE (page 1-15 of the 2016 KCSWDM)** — Amending Table 1.1.2.A such that the first box reads:

  Single family residential projects and **agricultural projects** that results in ≥2,000 sf of **new** plus **replaced impervious surface** or ≥7,000 sf of **land disturbing activity** but do not exceed the new plus replaced PGIS, new PGPS, and **new pervious surface** thresholds specified in Sec. 1.1.2.1; OR is an agricultural project that qualifies for the "Impervious Surface Percentage Exemption For Agricultural Projects"; OR is a project that results in 500 square feet or more of new impervious surface in a landslide hazard drainage area.

- **Section 1.1.2.1 SIMPLIFIED DRAINAGE REVIEW (page 1-16 of the 2016 KCSWDM)** — Amending paragraph four under the title "Threshold" such that it reads as the following:

  Simplified Drainage Review is required for any ***single family residential project*** or ***agricultural project*** that will result in 2,000 square feet~~s~~ or more of ***new impervious surface***, ***replaced impervious surface***, or ***new*** plus ***replaced impervious surface***, or 7,000 square feet or more of ***land disturbing activity***, OR is a project that results in 500 square feet or more of new impervious surface in a landslide hazard drainage area, AND meets one of the following criteria:

- **Section 1.2 CORE REQUIREMENTS, Downstream Water Quality Problems Requiring Special Attention (page 1-~~26~~ ~~29~~30 of the ~~2009 KCSWDM~~2016 KCSWDM)** — The following supplemental information is added to this section:

  The ~~2009 KCSWDM~~2016 KCSWDM recognizes water quality problems requiring special mitigation measures to protect receiving waters. A water quality problem is defined as a problem documented by the state to exceed the state's numeric water quality standard. The ~~2009 KCSWDM~~2016 KCSWDM references Category 2, 4, and 5 water quality problems as requiring special attention. Within the City of Sammamish, the following water quality

problems are currently listed by the Department of Ecology, based on the ~~2008~~ 2015 Water Quality Assessment, approved by the U.S. Environmental Protection Agency on ~~January 29~~July 22, ~~2009~~2016. The latest designated impaired waterbodies can be viewed at http://www.ecy.wa.gov/programs/wq/303d/currentassessmt.html.

Impaired Water Body	Parameter	Category*
Lake Sammamish	Dissolved oxygen, polychlorinated biphenyls (PCBs), bioassessment~~Dissolved oxygen, fecal coliform~~	5
Lake Sammamish	Total phosphorus, 2,3,7,8-TCDD TEQ, sediment bioassay~~Total phosphorus~~	2
Pine Lake Creek	Dissolved oxygen, temperature, bacteria~~Fecal coliform, dissolved oxygen, total phosphorus~~	5
Pine Lake Creek	Mercury	2
Pine Lake	Bacteria	2
Laughing Jacobs Creek	Bacteria, bioassessment, temperature, dissolved oxygen~~Fecal coliform, dissolved oxygen~~	5
Evans Creek	Temperature	4a
Eden Creek**	Bioassessment, temperature, bacteria	5
Eden Creek**	Copper, dissolved oxygen	2
Ebright Creek	Bioassessment~~Fecal coliform~~	5
Ebright Creek	Dissolved oxygen, mercury~~Dissolved oxygen~~	2
~~Evans Creek~~	~~Fecal coliform, dissolved oxygen, temperature~~	~~4a~~
~~Evans Creek~~	~~pH~~	~~2~~
Beaver Lake No. 2	Total phosphorus	~~2~~5

* Definition of Categories for impaired waterbodies:

- Category 2:~~–~~ Waters of concern, some evidence of water quality problem.
- Category 4 (a and b): Polluted waters with a plan (TMDL) or pollution control program in place to address the problem.
- Category 5: Polluted waters, a TMDL plan is required.

** Also known as George Davis Creek.

Projects that discharge to the impaired waterbodies identified above may be required to implement special treatment to address the water quality problem in accordance with the requirements outlined in Section 1.2.2.3, Water Quality Problem Impact Mitigation.

Studies and lake management plans have determined that Beaver and Pine Lakes within the City of Sammamish require a higher level of total phosphorus reduction than that currently required by the ~~2009 KCSWDM~~2016 KCSWDM. For projects that drain to Beaver Lake or Pine Lake, ~~the project proponent shall contact the City for specific requirements necessary to attain the desired level of total phosphorus reduction.~~ Sensitive Lake Water Quality Treatment and 80% total phosphorus removal using All Known Available and Reasonable Technology (AKART) shall be provided.

The federal Clean Water Act requires that a Total Maximum Daily Load (TMDL) cleanup plan be developed for each of the waterbodies on the state's list of impaired waterbodies, known as the "303(d) list." The TMDL study identifies pollution problems in the watershed, and specifies how much pollution needs to be reduced or eliminated to achieve clean water. Ecology has prepared TMDLs for fecal coliform bacteria, temperature and dissolved oxygen for the Bear-Evans watershed. Strategies identified in the TMDLs to address the water quality impairment in the Bear-Evans watershed are listed below. Development or redevelopment projects within the City of Sammamish that ultimately drain to Evans Creek should incorporate these actions as appropriate.

TMDL – Implementation Strategy for Fecal Coliform Bacteria in the Evans Creek Watershed

- Implement structural (as appropriate) and non-structural stormwater source control best management practices (BMPs).
- Restore riparian vegetation to help filter out stormwater pollutants.
- Properly manage domestic animal and livestock wastes.

TMDL – Implementation Strategy for Temperature and Dissolved Oxygen in the Evans Creek watershed

- Plant new and preserve existing trees in the riparian zone along lengths of the creeks.
- Investigate opportunities to enhance groundwater recharge.
- Restore and protect wetlands in areas that will benefit the stream and enhance habitat.
- Consider[BP2] a water management strategy that recognizes the benefits of maintaining summer baseflows.
- Minimize human-caused sources of nutrients in the watershed.

~~**Soil Amendment Requirement**~~

~~All projects that propose 7,000 square feet of land disturbing activity, or more, are required to amend the soils as specified below. This requirement is intended to apply to all projects independent of what surface water design manual is used.~~

- ~~Except as otherwise provided below, areas that have been cleared and graded shall have the soil moisture holding capacity restored to that of the original undisturbed soil native to the site to the maximum extent practicable. The soil in any area that has been compacted or that has had some or all of the duff layer or underlying topsoil removed shall be amended to mitigate for lost moisture-holding capacity. The amendment shall take place between May 1 and October 1. The topsoil layer shall be a minimum of eight inches thick, unless the applicant demonstrates that a different thickness will provide conditions equivalent to the soil moisture- holding capacity native to the site. The topsoil layer shall have an organic matter content of between five to ten percent dry weight and a pH suitable for the proposed landscape plants. When feasible, subsoils below the topsoil layer should be scarified at least four inches with some incorporation of the upper material to avoid stratified layers. Compost used to achieve the required soil organic matter content must meet the definition of "composted materials" in WAC 173-350-220.~~
- ~~This subsection does not apply to areas that: a. Are subject to a state surface mine reclamation permit; or b. At project completion are covered by an impervious surface, incorporated into a drainage facility or engineered as structural fill or slope.~~

Section 1.2.3.1 AREA-SPECIFIC FLOW CONTROL FACILITY REQUIREMENT

- Add new sections following IMPERVIOUS SURFACE PERCENTAGE EXEMPTION FOR AGRICULTURAL PROJECTS (page 1-42 of the 2016 KCSWDM)

  - MAINTENANCE EXEMPTIONS

    The following pavement maintenance practices are exempt:

    a) Pothole and square cut patching
    b) Overlaying existing asphalt or concrete pavement with asphalt or concrete without expanding the area of coverage (overlaying permeable or pervious pavements with traditional (non-permeable) asphalt or pavement is not considered pavement maintenance)
    c) Shoulder grading
    d) Reshaping/regrading drainage systems
    e) Crack Sealing
    f) Resurfacing with in-kind material without expanding the road prism
    g) Pavement preservation activities that do not expand the road prism
    h) Vegetation maintenance
    i) Catch basin and pipe maintenance
    j) Regrading/reshaping/resurfacing of existing ramps or sidewalks to meet ADA requirements
    k) Underground utility projects that replace the ground surface with in-kind material or materials with similar runoff characteristics.
    l) Projects that do not impact the base course are exempt and are not considered "replaced impervious".

  - MAINTENANCE NON-EXEMPTIONS

    The following pavement maintenance practices are not exempt.

    a) The practices subject to the Core Requirements that are triggered when the thresholds are met or exceeded. The extent to which the manual applies is explained for each circumstance.
    b) Removing and replacing a paved surface and impacting the base course. If impervious surfaces are not expanded, Core Requirements #1, 5, 6, and 9 apply.

- **Section 1.2.8 CORE REQUIREMENT #8: WATER QUALITY**

- Add the following new maintenance exemptions and non-exemptions under the section EXEMPTIONS FROM CORE REQUIREMENT #8 (page 1-69 of the 2016 KCSWDM)

4. MAINTENANCE EXEMPTIONS

The following pavement maintenance practices are exempt:

a) Pothole and square cut patching
b) Overlaying existing asphalt or concrete pavement with asphalt or concrete without expanding the area of coverage (overlaying permeable or pervious pavements with traditional (non-permeable) asphalt or pavement is not considered pavement maintenance)
c) Shoulder grading
d) Reshaping/regrading drainage systems
e) Crack Sealing
f) Resurfacing with in-kind material without expanding the road prism
g) Pavement preservation activities that do not expand the road prism
h) Vegetation maintenance
i) Catch basin and pipe maintenance
j) Regrading/reshaping/resurfacing of existing ramps or sidewalks to meet ADA requirements
k) Underground utility projects that replace the ground surface with in-kind material or materials with similar runoff characteristics.
l) Projects that do not impact the base course are exempt and are not considered "replaced impervious".

5. MAINTENANCE NON-EXEMPTIONS

The following pavement maintenance practices are not exempt.

a) The practices subject to the Core Requirements that are triggered when the thresholds are met or exceeded. The extent to which the manual applies is explained for each circumstance.
b) Removing and replacing a paved surface and impacting the base course. If impervious surfaces are not expanded, Core Requirements #1, 5, 6, and 9 apply.

- **Section 1.3.1 SPECIAL REQUIREMENT #1: OTHER ADOPTED AREA- SPECIFIC REQUIREMENTS (page 1-~~77~~ 99 of the ~~2009 KCSWDM~~2016 KCSWDM)** — Replace the table in Section 1.3.1 on page 1-~~78~~ 100 with the following:

Threshold	Requirement
If a proposed project is in a basin plan or lake management plan…	THEN the proposed project shall comply as codified by the City of Sammamish Municipal Code.

CHAPTER 2 – Drainage Plan Submittal

The City of Sammamish has added supplemental information and made minor changes to Chapter 2 of the ~~2009 KCSWDM~~2016 KCSWDM, as described below. Apart from this information, project proponents should refer to the county document for guidance on drainage plan submittal. All submittal reviews shall be conducted by the Department of Community Development (DCD).

Supplemental Information

As part of our Surface Water Design Manual the applicant shall refer to the following documents for Project Plans and As-Builts.

1. Site Development Permit – Technical Submittal Requirements ~~(Pages 3-5 relate to Stormwater).~~ This document is provided on the city website. ~~at: http://www.ci.sammamish.wa.us/files/document/7089.pdf~~
2. The applicant shall use the *City of Sammamish Standard Development Project Close-out (M/D Period) PW Administration Items Requirements/Checklist* form (available from the City of Sammamish Department of Community Development as a guide to assembling a *First Submittal Intake* package.

Section 2.4.2 FINAL CORRECTED PLAN SUBMITTAL (page 2-~~35~~39 of the ~~2009~~2016 KCSWDM) —

Replace Section 2.4.2 in entirety as follows:

The applicant shall use the *City of Sammamish Standard Development Project Close-out (M/D Period) PW Administration Items Requirements/Checklist* form (available from DCD) as a guide to assembling a *Second Submittal Intake* package for project closeout.

During the course of construction, special inspections are required for LID and Flow Control BMPs. Once construction is completed, a qualified professional shall provide a signed letter verifying that the BMPs have been inspected, installed correctly, and are functioning as designed. Any as-built deviations from the design shall be explained clearly in the letter.

CHAPTER 3 – Hydrologic Analysis and Design

The City of Sammamish has made no changes to Chapter 3 of the ~~2009 KCSWDM~~2016 KCSWDM. Project proponents should refer to the county document for guidance on hydrologic analysis and design.

~~The City of Sammamish has identified specific areas requiring Level 2 or Level 3 flow control as defined within the KCSWDM. Flow control areas are identified in the flow control maps accompanying this Addendum.~~

~~The City of Sammamish accepts continuous models that have been approved by Ecology. Included among these are:~~

- ~~**King County Runoff Time Series (KCRTS):** This is the hydrologic model that accompanies the 2009 KCSWDM. Ecology has deemed this model to be equivalent to the requirements of the Ecology manual provided that compliance for the flow-duration curves are consistent with the method Ecology uses. The model includes hourly and 15-minute rainfall. The 15-minute rainfall is used to determine peak flows used for conveyance design.~~
- ~~**Western Washington Hydrologic Model (WWHM):** This is the hydrologic model that accompanies the (Ecology Manual). WWHM incorporates routines to evaluate LID techniques. WWHM was initially developed for detention and water quality design and did not focus on peak flow predictions for conveyance design. The standard model does not include rainfall data that would be suitable for determining peak flows for conveyance design.~~

- ~~**MGSFlood:** This is the hydrologic model originally developed for Washington State Department of Transportation (WSDOT) for use in transportation projects. MGSFlood incorporates an extended rainfall database of 158 years in length created by combining rainfall records from different locations in the Pacific Northwest. It has recently incorporated a rainfall that is disaggregated to a 5- minute timestep to assist in the design of conveyance. MGSFlood also incorporates routines to evaluate LID techniques~~

~~The approved models are all derivatives of the Hydrologic Simulation Program- FORTRAN (HSPF) model. The City also accepts use of the HSPF model, provided suitable documentation is provided and approved concerning the runoff parameters used for the analyses. Approved regional parameters or basin-specific parameters developed during a basin plan can be used. Alternative parameters can be used following the protocols described in the 2009 KCSWDM.~~

~~Hydrologic analysis methods must follow "Table 3.2 Acceptable Uses of Runoff Computation Methods" found on page 3-10 12 of the 2009 KCSWDM2016 KCSWDM. Derivatives of HSPF (e.g., KCRTS, MGSFlood, and WWHM) can be applied as indicated under the "KCRTS" column. As noted above, there are differences the rainfall data used for these derivative models. These differences are most noticeable in the generation of peak flows used for conveyance design.~~

~~The City of Sammamish currently accepts both KCRTS and MGSFlood for conveyance design.~~

CHAPTER 4 – Conveyance System Analysis and Design[BP3][TD4]

The City of Sammamish has made minor changes to Chapter 4 of the 2016 KCSWDM. The following stricter requirements apply as applicable in this chapter:

1. Allowed Pipe Types:

Corrugated polyethylene (CPE) pipe, Polypropylene (PP) pipe, and Polyvinyl chloride (PVC) pipe are deleted and shall be replaced with the following allowed pipe and criteria:

WSDOT Section 9-05.24 Polypropylene Culvert Pipe, Polypropylene Storm Sewer Pipe, and Polypropylene Sanitary Sewer Pipe

All joints for polypropylene pipe shall be made with a bell/bell or bell and spigot coupling and shall conform to ASTM D 3212 using elastomeric gaskets conforming to ASTM F 477. All gaskets shall be factory installed on the pipe in accordance with the manufacturer's recommendations.

Qualification for each manufacturer of polypropylene storm sewer pipe requires joint system conformance to ASTM D 3212 using elastomeric gaskets conforming to ASTM F 477 and a formal quality control plan for each plant proposed for consideration.

A Manufacturer's Certificate of Compliance shall be required and shall accompany the materials delivered to the project. The certificate shall clearly identify production lots for all materials represented. The Contracting Agency may conduct verification tests of pipe stiffness or other properties it deems appropriate.

WSDOT Section 9-05.24(1) Polypropylene Culvert Pipe and Storm Sewer Pipe

Polypropylene culvert and storm sewer pipe shall conform to the following requirements:

- For dual wall pipe sizes up to 30 inches: ASTM F2736.
- For triple wall pipe sizes from 30 to 60 inches: ASTM F2764.
- For dual wall profile pipe sizes 36 to 60 inches: AASHTO MP 21, Type S or Type D.
- Fittings shall be factory welded, injection molded or PVC.

(Corrugated polyethylene drainage **pipe CPEP pipe will not be allowed as it does not meet minimum standards).**

2. Acceptable Pipe Sizes:

12-inch is the minimum diameter pipe to be maintained by the City.

3. Storm Drain Markers:

Storm drain markers are required at every catch basin. Markers are to be placed in locations approved by Public Works.

4. Pipe Slope:

Minimum pipe slope shall be 0.5%

5. Storm Testing:

All storm system shall be jetted, cleaned, and televisioned prior to final acceptance into City maintenance.

6. Structure Locations and Appurtenances:

Maximum pipe run between structures shall 300-ft. For maintenance of structures, a truck turnaround shall be provided. Maximum distance between maintenance vehicle access and drainage structure shall be 150-ft. Structures located in non-pavement areas shall include 2-ft wide asphalt ring around structure lid.

7. Pipe Deflections:

Once backfill is complete, the line and grade at pipe flow line leaving standing water greater than ½-inch in depth shall not be accepted and must be repaired prior to acceptance by the City.

8. Pipe Anchors:

Pipe anchor shall include 1" PVC pipe to be installed through the concrete anchor below the pipe to allow passing of ground water.

9. Drainage Structures:

The most updated WSDOT Standard Plans Section B shall be used to determine acceptable design standards.

10. Drainage Structures Ladders:

Ladders required within drainage structures shall not block inlet or outlet pipes and must be accessible from structure opening. Refer to WSDOT Standard Plans for details and specifications.

11. Submerged and Surcharged Pipe:

The 100-year design elevation of downstream stormwater facilities such as stormwater ponds or vaults shall be at or below all pipe inverts. Exception to this standard is the pipe from the first catch basin just upstream of the stormwater facility may be submerged to allow pipe inlet to facility to be submerged.

CHAPTER 5 – Flow Control Design

The City of Sammamish has added supplemental information and made several minor changes to Chapter 5 of the ~~2009 KCSWDM~~2016 KCSWDM, as described below. Apart from this information, project proponents should refer to the county document for guidance on flow control design.

Supplemental Information

The City of Sammamish has identified specific areas where the Conservation Flow Control (Level 2) and Flood Problem Flow Control (Level 3) flow control standards described in the ~~2009 KCSWDM~~2016 KCSWDM are to be applied within the City. Locations are shown on the City of Sammamish Flow Control Applications map accompanying this Addendum.

The King County Basic Flow Control (Level 1) standard does not apply within the City. There may, however, be circumstances where the Basic Flow Control standard can be applied. The ~~2009~~ 2016 KCSWDM defines the Basic Flow Control Standard as being appropriate for areas that drain to a closed conveyance system that discharges to a waterbody designated as a major receiving water. Lake Sammamish is designated a major receiving water. Developments that drain to closed drainage systems discharging directly to Lake Sammamish could, by definition, be eligible for the Basic Flow Control Standard. This would be the case where runoff from a new or redevelopment project area discharges to an existing ~~system~~ downstream drainage system where downstream capacity issues are likely with an increase in runoff to the system.

Changes to ~~2009 KCSWDM~~2016 KCSWDM

- **Section 5.1.1.1 DESIGN CRITERIA, Side Slopes (page 5-4 of the 2016 KCSWDM) —** Amend criteria 2, 3, and 4 to read as follows:

  Intent. The design of stormwater ponds and vaults are intended to be attractive site amenities. Open ponds are intended to appear like natural ponds. The physical appearance of vault walls are also intended to be minimized. To achieve the design of ponds and vaults that are more aesthetically compatible with adjacent land uses, standards have been established related to the slope of perimeter side slopes, curvilinear design, and the introduction of active and passive recreational elements. The Director may approve designs that do not meet the numeric standards below, provided the intent of the proposed design is equal to or better than the design that would accrue through strict adherence to these standards (refer to back pages of Sammamish Addendum for illustrations of intent).

  1) Up to 25% of the pond perimeter interior and exterior side slopes may be steeper than

3H:1V, if analyzed by a geotechnical engineer for stability and approved by the City.

2) Pond may contain vertical interior and exterior retaining walls, provided:

(a) They are constructed of reinforced concrete per Section 5.1.3 (p. 5-22) and the visible surface has an attractive pattern/finish;
(b) A safety handrail is provided meeting SMC Chapter 16 along the top of the wall, is not a cyclone or chain link fence, and is clearly recorded and documented that maintenance and repair is not the responsibility of the City;
(c) At least 75% of the pond interior and exterior perimeter will be a vegetated soil slope not steeper than 3H:1V; and
(d) The design is stamped by a licensed structural engineer.

3) For privately owned and maintained facilities, no more than 25% of the pond interior and exterior perimeter may be retaining walls, and building foundations may serve as one or more of the pond walls.

4) Pond interior berms shall be earthen and contain no steeper than 2:1 side slopes.

5) The perimeter of the pond must be designed such that it is curvilinear in design with minimum radius of 25-ft and a maximum radius of 100-ft. Intent: To create a pond that does not appear manmade (not appearing rectangular in shape).

- **Section 5.1.1.1 DESIGN CRITERIA, Embankments (page 5-4 of the 2016 KCSWDM)** Amend criteria 1 to read as follows:

1) Pond berm embankments higher than 6 feet shall require design by a geotechnical engineer. Pond embankments adjacent to property lines shall be no higher than 6 feet, unless mitigated and approved by the Director. The embankment height measurement includes the freeboard and is measured from the toe of the slope of the top of the embankment. Mitigation measures for exceeding the 6 foot height restriction for berms adjacent to property lines may include:

- Designed and analyzed by a geotechnical engineer or licensed structural engineer
- The toe of embankment slope shall be setback at least 10 feet from the property line
- 10-ft of Type I landscaping shall be provided between toe of berm and property line to provide landscape screening.

- **Section 5.1.1.1 DESIGN CRITERIA, Setbacks (page 5-7 of the 2016 KCSWDM) —** Amend to include the following criteria after criteria 5 to read as follows:

6) For pond berm embankments higher than 6 feet, the toe of the exterior slope shall be setback 10 feet or more to the tract or from the property line.

- **Section 5.1.1.1 DESIGN CRITERIA, Landscaping (page 5-8 of the 2016 KCSWDM)** – Amend to include the following criteria:

1) The opening sentence is modified to read "Landscaping for aesthetic purposes is required."

2) Ponds shall include trails or paths that encourage passive recreation in connection with stormwater facilities. Connect stormwater paths to off-site trail systems where feasible. Trails within tracts of City-maintained ponds in residential subdivision developments shall be designated "to be maintained by the homeowner's association". Trails or paths that provide passive recreation may be credited for up to 100 percent of the onsite recreation space requirement for projects that are required to provide onsite recreational space per SMC 21A.30.140 and SMC 21B.30.090. See Section 5.1.1.1, DESIGN CRITERIA, Detention Ponds in Recreation Tracts.

3) Table 5.1.1.A should be expanded to include but not limited to the following:

- Amended Plant List Examples: SMALL TREES AND SHRUBS WITH FIBROUS ROOTS

Small Trees/ High Shrubs

Botanical	**Common**
Acer circinatum	Vine maple
Arbutus unedo	Strawberry Tree
Amalanchier x grandiflora	Serviceberry
Cornus sericea	Red twig dogwood
Corylus cornuta	Filbert
Morella californica	California Wax Myrtle
Holodiscus discolor	Oceanspray
Physocarpus opulifolius	Ninebark
Pinus contora var contorta	Shore pine
Ribes aureum	
Ribes sanguineum 'King Edward VII'	Red-flowering current
Sambucus nigra	Black elderberry
Vaccinium spp.	Blueberry

Low Shrubs / Ornamental Grasses/ Perennial / Groundcover / Bulbs

Botanical	Common
Achillea millefolium	Western yarrow
Arctostaphylos uva-ursi	Kinnikinnick
Aster oblongifolius 'October Skies'	Aromatic aster
Cammasia quamash	Camas Lily
Cornus sericea	Dwarf red-twig dogwood
Festuca idahoensis	Idaho fescue
Fragaria chiloensis 'Lipstick'	Coastal strawberry
Gaultheria shallon	Salal
Helianthemum nummularium	Sunrose
Helictotrichon sempervirens	Blue oat grass
Iris tenax	Tough-leaf iris
Mahonia aquifolium	Oregon grape-holly
Lonicera pileata	Boxleaf honeysuckle
Lonicera involucrata	Twinberry
Mahonia nervosa	Cascade Oregon grape
Mahonia repens	Creeping mahonia
Narcissus sp.	Daffodil
Nassella tennuissima (formerly stipa)	Mexican feather grass
Pennisetum alopecuroides	Fountain grass
Philadelphus lewisii	Mock-orange
Pinus mugo pumilio	Mugho Pine
Polysticum munitum	Sword fern
Potentilla gracilis	Graceful cinquefoil
Prunus laurocerasus 'Mt. Vernon'	Mt. Vernon Dwarf Laurel
Rosa gymnocarpa	Baldhip rose
Rosa 'Hansa'	Double pink old-fashioned rose
Rosemarinus officinalis	Rosemary
Rhododendron 'PJM' hybrids	PJM Hybrid Rhododendrons
Rudbeckia fulgida var. sullivantii	
Salvia 'May Night'	
Solidago rugosa	Goldenrod
Spiraea japonica	Japanese spireae
Vaccinium ovatum	Evergreen huckleberry

- **Section 5.1.1.1 DESIGN CRITERIA, Detention Ponds in Recreational Tracts (page 5-11 of the 2016 KCSWDM)** – Amend section to read as follows:

  Projects required to provide onsite recreational space or landscaped open space per SMC 21A.30.140 and SMC 21B.30.090 may combine the detention pond tract with the recreation space tract or landscaped area to receive up to a 100% reduction in required onsite recreational

space, less any recreation facilities required pursuant to SMC 21A.30.160. To receive up to the 100% credit, the following criteria must be met as required by SMC 21A.30.140(4) and SMC 21B.30.100(4):

1. The proposed stormwater tract must be dedicated or reserved as a part of a recreational space tract.
2. To receive a 50% credit, the stormwater pond must meet all standards for typical ponds unless modified by the following additional requirements:
    a. Side slopes shall not exceed 33 percent unless they are existing, natural, and covered with vegetation. *Intent: To create ponds that are natural in appearance.*
    b. A bypass system or an emergency overflow pathway shall be designed to handle flow exceeding the facility design and located so that it does not pass through active recreation areas or present a safety hazard.
    c. The area surrounding the stormwater pond shall be landscaped in a manner to enhance passive recreational opportunities, including a trail or pathway around the pond perimeter. *Intent: To create opportunities for passive recreation or wildlife viewing.*
    d. The stormwater pond shall be designed so that it does not require fencing per the fencing requirements in Chapter 5 of 2016 KCSWDM (page 5-6).
    e. Split rail fencing (3 ft. minimum height) is required around the pond at the emergency overflow elevation of the pond or higher. Wire mesh backing of the fence is encouraged, but not required. *Intent: To preserve the functional integrity of the pond while allowing view of facility.*
3. To receive a 100% credit, the stormwater pond must meet all the additional requirements in criteria 2 above, and provide three or more of the following amenities;
    a. Provide seating using walls, benches and/or tables and chairs that view the stormwater pond. *Intent: To provide opportunities within the stormwater tract to linger and interact with the stormwater facility.*
    b. Create overlook or destination points using decks or platform with views of the stormwater system. *Intent: To provide opportunities to view the stormwater facility and wildlife.*
    c. Provide vertical planes (using stairs, platforms, etc.) that allow stormwater to be interacted with and viewed from different levels. *Intent: To provide visual interest and provide ways to interact with the stormwater facility, such as climbing down to the stormwater facility or viewing from above.*
    d. Provide interpretive signage describing the stormwater feature, or the landscape features (such as highlighting the pollinator benefits of plantings incorporated into the stormwater tract). Intent: To provide education opportunities associated with the stormwater facility.
    e. Stack horizontal and vertical planes to create features such as pools and waterfalls. Intent: To exploit visual interest of stormwater flowing over

surfaces, plunging down planes, or falling over edges.

f. Provide a fountain feature near the pond center. Intent: To provide visual interest through continuous water movement.

g. Provide at least one fitness station located near the pond accessible via a trail or pathway. Intent: To provide active recreation opportunities and encourage the use of the stormwater tract for recreation.

4. Where a tract is jointly used for recreational space and Sammamish maintained drainage facilities, the City shall only hold responsibility for maintenance of the drainage facilities, and an access easement shall be provided for that purpose. All recreational features such as, but not limited to, landscaping, trails, fences, benches, etc., shall be the responsibility of the Homeowner's Association or jointly by all property owners within the platted development. Recorded documentation of maintenance responsibilities shall be provided.

- **Section 5.~~3~~1.1.1 DESIGN CRITERIA, Detention Ponds in Open Space (page 5-~~25~~ 12 of the ~~2009~~ 2016 KCSWDM) —** This section does not apply. City of Sammamish does not require this signage.

- **Section 5.~~3~~1.1.1 DESIGN CRITERIA, Figure 5.~~3~~1.1.D ~~Permanent Surface Water Control Pond~~ Stormwater Facility Signs (page 5-~~29~~ 16 of the ~~2009~~ 2016 KCSWDM) —** Replace references to King County and the King County logo with City of Sammamish and the City of Sammamish logo, respectively. Also, replace the sign detail with the Sammamish Stormwater Facility sign detail.
- ~~Also,~~

  - ~~For more information or to report littering, vandalism or other problems, call City Hall at 425-295-0500. For emergencies after-hours, holidays, and weekends call the public works emergency dispatch number at 206- 296-8100.~~

  ~~a.~~

- **Section 5.1.3.1 DESIGN CRITERIA, Setbacks (page 5-23 of the 2016 KCSWDM)** – Add the following sentence at the end of the paragraph that begins "Setbacks to tract/easement lines for vaults…":

  Where vaults are permitted within required setbacks, pursuant to SMC 21A.25.090, the maximum height of exposed vault walls shall be 6 feet measured from the lowest exposed elevation of the vault. An exception to this shall exist where the exposed vault wall is a building foundation wall which shall be limited to the maximum height for structures of the underlying zoning district. Building setbacks for any vault wall exposure shall be minimum 10-ft and shall provide landscape screening consistent with SMC 21A.35.055.

CHAPTER 6 – Water Quality Design

The City of Sammamish has added supplemental information and made ~~one~~ minor changes to Chapter 6 of the ~~2009 KCSWDM~~2016 KCSWDM, as described below. Apart from this information, project proponents should refer to the county document for guidance on water quality design.

Supplemental Information

The City of Sammamish adopts the BMPs and water quality treatment menus in the ~~2009 KCSWDM~~2016 KCSWDM. Special treatment requirements for runoff draining to impaired waterbodies are addressed in Chapter 1. An exception to the 2016 KCSWDM is the treatment requirement for runoff discharging to lakes designated to receive a higher level of total phosphorus removal. The Sensitive Lake Protection Menu in the ~~2009 KCSWDM~~2016 KCSWDM has a treatment goal of 50 percent reduction of annual average total phosphorus (TP), assuming typical pollutant concentrations in urban runoff. Lake management plans and studies have determined that Beaver Lake and Pine Lake require higher levels of phosphorus removal to protect the lakes from eutrophication brought about by development. Within these areas, a treatment goal of 80 percent reduction of TP is required. Areas requiring the higher level of TP reduction are shown on the Water Quality Treatment Application map accompanying this Addendum. Proponents for projects within these areas shall work with the City to determine the appropriate measures to be taken to achieve the 80 percent TP reduction goal.

Change to ~~2009 KCSWDM~~2016 KCSWDM

Section 6.4.1.2 ~~BASIC~~ DESIGN CRITERIA, Figure 6.4.1.~~C~~ B Waterfowl Sign (page 6-~~82~~ 85 of the ~~2009 KCSWDM~~2016 KCSWDM) — This section does not apply. City of Sammamish does not require this signage.

- The City of Sammamish allows bioretention to be used for pretreatment. The bioretention system shall be designed per the requirements in the 2012 Stormwater Management Manual for Western Washington (Ecology Manual).[BP5][TD6]

DEFINITIONS

The City of Sammamish has made the following changes to the Definitions Section of the ~~2009 KCSWDM~~2016 KCSWDM. Project proponents should refer to the county document for other definitions.

Term (page)	Action
Critical aquifer recharge area (p ~~1-2~~5 of KCSWDM ***Definitions***)	*Replace~~–~~ as follows (from SMC 21A.15.253)*: ***Critical aquifer recharge areas*** (CARAs) means those areas in the City of Sammamish with a critical recharging effect on aquifers used for potable water as defined by WAC 365-190-030(2). CARAs have prevailing geologic conditions associated with infiltration rates that create a high potential for contamination of groundwater resources or contribute significantly to the replenishment of groundwater. CARAs shall be classified based on the following criteria: (1) Class 1 CARAs include those areas located within the mapped one- or five-year capture zone of a wellhead protection area. (2) Class 2 CARAs include those areas located within the mapped 10-year capture zone of a wellhead protection area. (3) Class 3 CARAs include those areas outside wellhead protection areas that are identified as high aquifer recharge potential areas based on characteristics of surficial geology and soil types. (Ord. O2005-193 § 2)
Erosion hazard area (p ~~1-2~~9 of KCSWDM ***Definitions***)	*Replace as follows (from SMC 21A.15.415)*: ***Erosion hazard areas*** mean those areas in the City underlain by soils that are subject to severe erosion when disturbed. Such soils include, but are not limited to, those classified as having a severe or very severe erosion hazard according to the USDA Soil Conservation Service, the 1973 King County Soils Survey or any subsequent revisions or addition by or to these sources. These soils include the following when they occur on slopes 15 percent or steeper: (1) The Alderwood gravely sandy loam (AgD); (2) The Alderwood and Kitsap soils (AkF); (3) The Beausite gravely sandy loam (BeD and BeF); (4) The Everett gravelly sandy loam (EvD); (5) The Kitsap silt loam (KpD); (6) The Ovall gravely loam (OvD and OvF); (7) The Ragnar fine sandy loam (RaD); and (8) The Ragnar-Indianola Association (RdE). (Ord. O2005-193 § 2; Ord. O2003-132 § 10)
Flood hazard area (p 1-~~3~~10 of KCSWDM ***Definitions***)	*Replace as follows (per SMC 21A.15.680)*: ***Flood hazard areas*** means those areas in the City of Sammamish subject to inundation by the base flood and those areas subject to risk from channel relocation or stream meander including, but not limited to, streams, lakes, wetlands, and closed depressions. (Ord. O2003-132 § 10)

Term (page)	Action
Frequently Flooded Area SMC 21A.50.230	*Add new definition as follows (from SMC 21A.50.230)*: (1) Frequently flooded areas include all areas of special flood hazards within the jurisdiction of the City of Sammamish. (a) The areas of special flood hazard are identified by the Federal Insurance Administration in a scientific and engineering report entitled "the Flood Insurance Study for King County," as amended, as stated in SMC 15.10.060. The flood insurance study is on file at Sammamish City Hall. The best available information for flood hazard area identification as outlined in SMC 15.10.130(2) shall be the basis for regulation until a new FIRM is issued that incorporates the data utilized under SMC 15.10.130(2). (b) The director may use additional flood information that is more restrictive or detailed than that provided in the Flood Insurance Study conducted by the Federal Emergency Management Agency (FEMA) to designate frequently flooded areas, including data on channel migration, historical data, high water marks, photographs of past flooding, location of restrictive floodways, maps showing future build-out conditions, maps that show riparian habitat areas, or similar information. (2) Development in frequently flooded areas shall be subject to the provisions in Chapter 15.10 SMC. (Ord. O2005-193 § 1; Ord. O99-29 § 1)
Landslide Hazard Area ~~***(Steep slope)***~~ (page ~~1-3~~15 of KCSWDM ***Definitions***)	*Replace as follows (per SMC 21A.15.680)*: ***Landslide hazard areas*** mean those areas in the City of Sammamish potentially subject to risk of mass movement due to a combination of geologic, topographic, and hydrologic factors. These areas are typically susceptible to landslides because of a combination of factors including: bedrock, soil, slope gradient, slope aspect, geologic structure, groundwater, or other factors. Landslide hazard areas include the following: (1) Areas of historic failures, such as:(a) Those areas delineated by the U.S. Department of Agriculture's Natural Resources Conservation Service as having a "severe" limitation for building site development; (b) Areas designated as quaternary slumps, earthflows, mudflows, or landslides on maps published by the U.S. Geological Survey or Department of Natural Resources; (2) Areas that have shown movement during the Holocene epoch, from 10,000 years ago to the present, or which are underlain by mass wastage debris from that epoch; (3) Any area with all three of the following characteristics: (a) Slopes steeper than 15 percent; and (b) Hillsides intersecting geologic contacts with a relatively permeable sediment overlying a relatively impermeable sediment or bedrock; and (c) Springs or groundwater seepage; (4) Areas with a slope of 40 percent or steeper and with a vertical relief of 10 or more feet except areas composed of consolidated rock. A slope is delineated by establishing its toe and top and measured by averaging the inclination over at least 10 feet of vertical relief; (5) Slopes that are parallel or subparallel to planes of weakness (such as bedding planes, joint systems, and fault planes) in subsurface materials; (6) Slopes having gradients steeper than 80 percent subject to rock fall during seismic shaking; (7) Areas potentially unstable because of rapid stream incision, stream bank erosion or undercutting by wave action; and (8) Landslide hazard areas do not include those areas composed of slopes greater than 40 percent that were created from a previously non-landslide hazard area through legal grading activity and that are confirmed to be stable by a qualified professional. (Ord. O2005-193 § 2; Ord. O2003-132 § 10)
Landslide Hazard Drainage Area (page 15 of KCSWDM	*Replace as follows:* "Landslide hazard drainage area" are areas where overland flows pose a significant threat

Term (page)	Action
Definitions)	to health and safety because of their close proximity to a landslide hazard area as defined by SMC 21A.15.680. Mapped Landslide hazard drainage areas are approximate. Public Works may determine that areas not mapped as Landslide hazard drainage areas may meet this definition. ~~*Replace as follows (per SMC 21A.15.681)*~~ ~~***Landslide hazard drainage area*** means a specially mapped area where the City has determined that overland flows from new projects will pose a significant threat to health and safety because of their close proximity to a landslide hazard area as defined by SMC 21A.15.680.~~

APPENDICES

The City of Sammamish has made the following changes to the Appendices section of the ~~2009 KCSWDM~~2016 KCSWDM. Project proponents should refer to the county appendices where referenced below.

Appendix A: Maintenance Requirements for Flow Control, Conveyance, and WQ Facilities – The City of Sammamish has made no changes, and Appendix A applies in its entirety to the City of Sammamish.

Appendix B: Master Drainage Plan Objective, Criteria and Components, and Review Process – This appendix does not apply within the City of Sammamish.

Appendix C: ~~Small~~ Simplified Drainage Requirements – This is a separately bound document included with the KCSWDM and this appendix applies in its entirety to the City of Sammamish. Appendix C provides guidance for many of the low impact development (LID) techniques referenced in the City of Sammamish LID Ordinance.

Appendix D: ~~Erosion and Sediment Control~~Construction Stormwater Pollution Prevention (CSWPP) Standards – This is a separately bound document included with the KCSWDM and this appendix applies in its entirety to the City of Sammamish.

R EFERENCE

Table Ref-1 identifies which reference sections in the 2016 KCSWDM apply and those that do not apply to the City of Sammamish. Table Ref-2 lists additional City of Sammamish references that apply.

Table Ref-1. Applicability of KCSWDM References to projects in the City of Sammamish ~~Projects~~

No.	Description	Action
1	**KCC 9.04 Surface Water Runoff Policy**	This reference document applies. The King County surface water runoff policy, as adopted by reference in Chapter 9.04 KCC as adopted by SMC ~~15.05 (Ordinance 099-17 § 1)~~13
2	**Adopted Critical Drainage Areas**	This reference document shall be deleted in entirety. Project proponents should refer to City codes, ordinances, and sensitive areas maps for description and requirements within sensitive areas.
3	**Other Adopted Area Specific Drainage Requirements**	This reference document shall be deleted in entirety. Project proponents should refer to City codes, ordinances, and sensitive areas maps for description and requirements within sensitive areas. The project proponent shall also work with the City on additional requirements that may apply to their project.
4	**Other Drainage Related Regulations and Guidelines** A. Grading Code Soil Amendment Standard B. Clearing & Grading Seasonal Limitations C. Landscape Management Plan Guidelines D. Shared Facility Maintenance Responsibility and Guidance	A. ~~This standard is applicable.~~Not applicable. See SMC 16.15. B. Not applicable. See SMC 16.15 and SMC ~~16.15~~21A.50.220. C. Applicable. D. ~~Not~~ Applicable.
5	**Wetland Hydrology Protection Guidelines**	These guidelines apply.

No.	Description	Action
6	**Hydrologic/Hydraulic Design Methods** A. Infiltration Rate Test B. Pond Geometry Equations C. Introduction to Level Pool Routing D. Supplemental Modeling Guidelines	This reference section is applicable.
7	**Engineering Plan Support** A. King County Standard Map Symbols B. Standard Plan Notes and Example Construction Sequence C. Storm Filter Facility Access ~~&~~ and Cartridge Configuration	A. Applicable. B. Replace with City's standard plan notes. Contact City for most current version of notes. C. ~~Not applicable. Delete this reference subsection in entirety~~ Applicable.[TD7]
8	**Forms and Worksheets** A. TIR Worksheet B. Offsite Analysis Drainage System Table C. Water Quality Facility Sizing Worksheets~~Flow Control and Water Quality Facility~~ D. Flow Control and Water Quality Facility Summary Sheet and Sketch E. CSWPPP Worksheet Forms F. Adjustment Application Form and Process Guidelines G. Dedication and Indemnification Clause H. Bond ~~Quantity~~ Quantities Worksheet I. Maintenance and Defect Agreement J. Declaration of Covenant K. Drainage Release Covenant L. Drainage Easement M. Flow Control BMP Covenant (see replacement form name below). N. Impervious Surface Limit Covenant O. Clearing Limit Covenant P. River Protection Easement Q. Leachable Metals Covenant	A. Applicable. B. Applicable. C. Applicable. D. Applicable. E. Applicable. F. Applicable, replace with COS updated form. G. Applicable, replace with COS updated form. H. Applicable. I. Applicable, replace with COS updated form. J. Applicable, replace with COS updated form. K. Applicable, replace with COS updated form. L. Applicable, replace with COS updated form. M. Applicable, replace with COS updated form. N. Applicable, replace with COS updated form.~~.Delete in entirety; not applicable.~~ O. Applicable, replace with COS updated form.~~Delete in entirety; not applicable.~~ P. Applicable, replace with COS updated form.~~Delete in entirety; not applicable.~~ Q. Applicable, replace with COS updated form. ~~.Delete in entirety; not applicable.~~

No.	Description	Action
9	**Interim Changes to Requirements** A. Blanket Adjustments B. Administrative Changes	~~Delete in entirety~~Applicable.
10	**King County Identified Water Quality Problems**	Delete in entirety
11	**Materials** A. (VACANT) B. (VACANT) C. Bioretention Soil Media Standard Specifications D. (VACANT) E. Roofing Erodible or Leachable Materials	A. Not applicable. B. Not applicable. C. Applicable. D. Not applicable. E. Applicable.
12	**(VACANT)**	Not applicable
13	**(VACANT)**	Not applicable
14	**Supplemental Approved Facilities** A. Approved Proprietary Facilities B. Approved Public Domain Facilities	A. Applicable. B. Applicable.
~~11~~	~~**BMP T5.13 Post-Construction Soil Quality and Depth**~~	~~New section added. Excerpt from 2005 Stormwater Manual for Western Washington, Ecology. Excerpt applies in entirety except final section, ***Flow Reduction Credits,*** does not apply.~~ ~~The most current version of *Guidelines and Resources for Implementing Soil Quality and Depth BMP T5.13* is available at:~~ ~~http://www.soilsforsalmon.org/pdf/Soil_BMP_Manual.pdf~~

Table Ref-2. City of Sammamish References

No.	Description
1	**Area-Specific Drainage Requirements** A. Flow Control Applications Map B. Water Quality Applications Map C. Landslide Hazard Drainage Areas Map D. Erosion Hazard Near Sensitive Water Bodies ~~[Others to be determined]~~

Exhibit 1

Stormwater Pond Design Intent

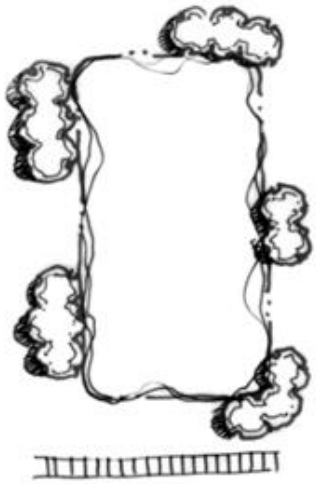

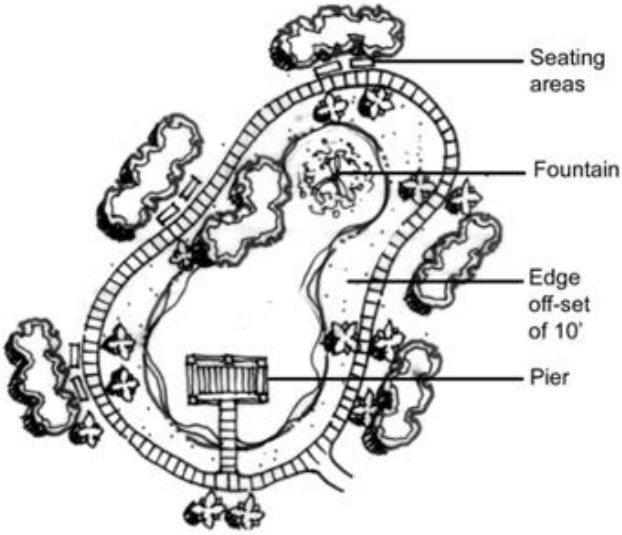

POOR POND DESIGN

GOOD POND DESIGN

ATTACHMENT B:

AMENDED CHAPTER 13.10 SMC

DEFINITIONS

Sections:

13.10.010 Scope of chapter.
13.10.020 Adjustment.
13.10.030 AKART.
13.10.040 Applicant.
13.10.050 Basin.
13.10.060 Basin plan.
13.10.070 Best management practices.
13.10.080 City.
13.10.090 Closed depression.
13.10.100 Clean Water Act.
13.10.110 Construct or modify.
13.10.120 Conveyance system.
13.10.130 Department.
13.10.140 Development.
13.10.150 Developed parcel.
13.10.160 Director.
13.10.170 Division.
13.10.180 Discharge.
13.10.190 Drainage.
13.10.200 Drainage facility.
13.10.210 Drainage review.
13.10.220 Effective impervious ~~area~~surface.
13.10.230 Erosion and sediment control.
13.10.240 Farm management plan.
13.10.250 Financial guarantee.
13.10.260 Flood hazard reduction plan.
13.10.270 Flow control best management practice.
13.10.280 Flow control facility.
13.10.290 Forest practices.
13.10.300 Full drainage review.
13.10.310 Groundwater.
13.10.320 High-use site.
13.10.330 Hydraulically connected.
13.10.340 Impervious surface.
13.10.350 Improvement.
13.10.360 Land disturbing activity.
13.10.370 Land use code.

13.10.380 Lake management plan.
13.10.390 Large project drainage review.
13.10.400 Licensed civil engineer.
13.10.410 Maintenance.
13.10.420 Master drainage plan.
13.10.430 National Pollutant Discharge Elimination System.
13.10.440 National Pollutant Discharge Elimination System permit.
13.10.450 Native vegetated surface.
13.10.460 Natural discharge location.
13.10.470 Natural surface water drainage system.
13.10.480 New impervious surface.
13.10.490 New pervious surface.
13.10.500 Open space.
13.10.510 Parcel.
13.10.520 Person.
13.10.525 Pervious surface.
13.10.530 Pollution-generating impervious surface.
13.10.540 Pollution-generating pervious surface.
13.10.550 Project.
13.10.560 Project site.
13.10.570 Rate category.
13.10.580 Redevelopment project.
13.10.590 Replaced impervious surface.
13.10.600 Residence.
13.10.610 Residential parcel.
13.10.620 Runoff.
13.10.630 Salmon conservation plan.
13.10.640 Shared facility.
13.10.650 Service area.
13.10.655 Simplified drainage review.
13.10.660 Site.
~~13.10.670 Small project drainage review.~~
13.10.680 Source control BMP.
13.10.690 State Waste Discharge Permit.
13.10.700 Stormwater compliance plan.
13.10.710 Stormwater plan.
13.10.720 Stormwater Pollution Prevention Manual.
13.10.730 Subbasin.
13.10.740 Surface and stormwater.
13.10.750 Surface and stormwater management services.
13.10.760 Surface and stormwater management system.
13.10.770 Surface Water Design Manual.
13.10.780 Surface water management fee protocols.
13.10.790 Treatment BMP.
13.10.800 Targeted drainage review.
13.10.810 Undeveloped parcel.

13.10.820 Water quality ~~treatment~~ facility.

13.10.010 Scope of chapter.
This chapter contains definitions of technical and procedural terms used throughout this title. (Ord. O2011-304 § 1 (Att. A))

13.10.020 Adjustment.
"Adjustment" means a department-approved variation in the application of the requirements of Chapter 13.20 SMC and the Surface Water Design Manual to a particular project in accordance with SMC 13.20.030. "Adjustment" replaces "variance," which was used in prior editions of the Surface Water Design Manual. (Ord. O2011-304 § 1 (Att. A))

13.10.030 AKART.
"AKART" means "all known, available and reasonable methods of prevention, control and treatment." "AKART" represents the most current methodology that can be reasonably required for preventing, controlling or abating the pollutants associated with a discharge. "AKART" applies to both point and nonpoint sources of pollution. (Ord. O2011-304 § 1 (Att. A))

13.10.040 Applicant.
"Applicant" means a property owner or a public agency or public or private utility that owns a right-of-way or other easement or has been adjudicated the right to such an easement under RCW 8.12.090, or any person or entity designated or named in writing by the property or easement owner to be the applicant, in an application for a development proposal, permit or approval. (Ord. O2011-304 § 1 (Att. A))

13.10.050 Basin.
"Basin" means a geographic area that contains and drains to a stream or river named and noted on common maps, such as the Cedar River, Sammamish River, Green River, Snoqualmie River, Skykomish River or White River, or a geographic area that drains to a nonflowing water body named and noted on common maps, such as Lake Washington or Puget Sound. (Ord. O2011-304 § 1 (Att. A))

13.10.060 Basin plan.
"Basin plan" means a plan and all implementing regulations and procedures including, but not limited to, capital projects, public education activities and land use management regulations adopted by ordinance for managing surface and stormwater within the basin. (Ord. O2011-304 § 1 (Att. A))

13.10.070 Best management practices.
"Best management practices" or "BMPs" mean~~s~~ any schedule of activities, prohibitions of practices, maintenance procedure or ~~the best available and reasonable physical,~~ structural~~,~~ and/or managerial ~~or behavioral activities~~practice approved by King County, that, when used singly or in combination, prevents~~eliminate~~ or reduces the release of pollutants and other adverse impacts ~~contamination of both~~to surface water, stormwater and groundwater~~s~~. (Ord. O2011-304 § 1 (Att. A))

13.10.080 City.
"City" means City of Sammamish. (Ord. O2011-304 § 1 (Att. A))

13.10.090 Closed depression.
"Closed depression" means an area greater than 5,000 square feet at overflow elevation that is low-lying and that has no or such a limited surface water outlet that the area acts as a stormwater retention facility. (Ord. O2011-304 § 1 (Att. A))

13.10.100 Clean Water Act.
"Clean Water Act" means 33 U.S.C. 1251 et seq., as amended. (Ord. O2011-304 § 1 (Att. A))

13.10.110 Construct or modify.
"Construct or modify" means to install a new drainage pipe or ditch or make improvements to an existing drainage pipe or ditch, for purposes other than maintenance, that either serves to concentrate previously unconcentrated surface and stormwater runoff or serves to increase, decrease or redirect the conveyance of surface and stormwater runoff. "Construct or modify" does not include installation or maintenance of a driveway culvert installed as part of a single-family residential building permit. (Ord. O2011-304 § 1 (Att. A))

13.10.120 Conveyance system.
"Conveyance system" means the drainage facilities and features, both natural and constructed, that ~~collect, contain and provide for the flow of surface and stormwater from the highest points on the land down to a receiving water~~provide for the collection and transport of surface water or stormwater runoff. The natural elements of the conveyance system include swales and small drainage courses, streams, rivers, lakes and wetlands. The constructed elements of the conveyance system include gutters, ditches, pipes, catch basins, channels and most flow control and water quality treatment facilities. (Ord. O2011-304 § 1 (Att. A))

13.10.130 Department.
"Department" means the department of public works or its successor. (Ord. O2011-304 § 1 (Att. A))

13.10.140 Development.
"Development" means any activity that requires a permit or approval, including, but not limited to, a building permit, grading permit, shoreline substantial development permit, conditional use permit, special use permit, zoning variance or reclassification, subdivision, short subdivision, urban planned development, binding site plan, site development permit or right-of-way use permit. "Development" does not include a Class I, II, III or IV-S forest practice conducted in accordance with Chapter 76.09 RCW and WAC Title 222 or a Class IV-G nonconversion forest practice, as defined in Chapter 21A.15 SMC, conducted in accordance with Chapter 76.09 RCW and WAC Title 222 and a county-approved forest management plan. (Ord. O2011-304 § 1 (Att. A))

13.10.150 Developed parcel.
"Developed parcel" means any parcel altered from the natural state by the construction, creation or addition of impervious surfaces. (Ord. O2011-304 § 1 (Att. A))

13.10.160 Director.
"Director" means the director of the City of Sammamish department of public works, other department directors specified in enforcement procedures established in accordance with the Sammamish Municipal Code, or any designee of those directors. (Ord. O2011-304 § 1 (Att. A))

13.10.170 Division.
"Division" means the department of public works, engineering division or its successor agency. (Ord. O2011-304 § 1 (Att. A))

13.10.180 Discharge.
"Discharge" means runoff, excluding offsite flows, leaving the proposed development through overland flow, built conveyance systems, or infiltration facilities~~throw, drain, release, dump, spill, empty, emit, or pour forth any matter or to cause or allow matter to flow, run or seep from land or be thrown, drained, released, dumped, spilled, emptied, emitted or poured into water~~. (Ord. O2011-304 § 1 (Att. A))

13.10.190 Drainage.
"Drainage" means the collection, conveyance, containment or discharge, or any combination thereof, of surface and stormwater runoff. (Ord. O2011-304 § 1 (Att. A))

13.10.200 Drainage facility.
"Drainage facility" means a constructed or engineered feature that collects, conveys, stores or treats surface and stormwater runoff. "Drainage facility" includes, but is not limited to, a constructed or engineered stream, lake, wetland, or closed depression, or a pipe, channel, ditch, gutter, flow control facility, flow control BMP, water quality facility, erosion and sediment control facility, and any other structure and appurtenance that provides for drainage~~pipelines, channels, ditches, swamps, lakes, wetlands, closed depressions, infiltration facilities, flow control facilities, erosion/sedimentation control facilities and other drainage structures and appurtenances, both natural and constructed~~. (Ord. O2011-304 § 1 (Att. A))

13.10.210 Drainage review.
"Drainage review" means an evaluation by City staff of a proposed project's compliance with the drainage requirements in the Surface Water Design Manual. The types of drainage review include: ~~small~~ Simplified Drainage Review, T~~project drainage review, t~~argeted ~~d~~Drainage ~~review~~Review, Directed Drainage Review, ~~full~~ Full ~~drainage~~ Drainage ~~review~~ Review and ~~large~~ Large ~~project~~ Project ~~drainage~~ Drainage ~~review~~Review. (Ord. O2011-304 § 1 (Att. A))

13.10.220 Effective impervious ~~area~~surface.
"Those impervious surfaces that are connected via sheet flow or discrete conveyance to a drainage system. Impervious surfaces are considered ineffective if: 1) the runoff is fully dispersed as described in Appendix C of this manual; 2) residential roof runoff is infiltrated in

accordance with the full infiltration BMP described in the Surface Water Design Manual; or 3) approved continuous runoff modeling methods indicate that the entire runoff file is infiltrated.~~Effective impervious area" means the portion of actual impervious area that is connected, or has the effect of being connected as defined in the Surface Water Design Manual, directly to the stormwater drainage system via surface flow or discrete conveyances such as pipes, gutters or ditches.~~ (Ord. O2011-304 § 1 (Att. A))

13.10.230 Erosion and sediment control.
"Erosion and sediment control" means any temporary or permanent measures taken to reduce erosion, control siltation and sedimentation and ensure that sediment-laden water does not leave the site or enter into wetlands or aquatic areas. (Ord. O2011-304 § 1 (Att. A))

13.10.240 Farm management plan.
"Farm management plan" means a comprehensive site-specific plan developed by the farm owner in cooperation with the King Conservation District taking into consideration the land owners' objectives while protecting water quality and related natural resources. (Ord. O2011-304 § 1 (Att. A))

13.10.250 Financial guarantee.
"Financial guarantee" means a form of financial security posted to do one or more of the following: ensure timely and proper completion of improvements; ensure compliance with the Sammamish Municipal Code; or provide secured warranty of materials, workmanship of improvements and design. "Financial guarantees" include assignments of funds, cash deposit, surety bonds or other forms of financial security acceptable to the director. "Performance guarantee," "maintenance guarantee" and "defect guarantee" are considered subcategories of financial guarantee. (Ord. O2011-304 § 1 (Att. A))

13.10.260 Flood hazard reduction plan.
"Flood hazard reduction plan" means a plan and all implementing programs, regulations and procedures including, but not limited to, capital projects, public education activities and enforcement programs for reduction of flood hazards and prepared in accordance with RCW 86.12.200. (Ord. O2011-304 § 1 (Att. A))

13.10.270 Flow control best management practice.
"Flow control best management practice" means a small scale drainage facility or feature that is part of a development site strategy to use processes such as infiltration, dispersion, storage, evaporation, transpiration, forest retention, and reduced impervious surface footprint to mimic pre-developed hydrology and minimize stormwater runoff.~~means a method or design for dispersing, infiltrating or otherwise reducing or preventing development-related increases in surface and stormwater runoff at, or near, the sources of those increases.~~ "Flow control best management practice" includes the methods and designs specified in the Surface Water Design Manual. (Ord. O2011-304 § 1 (Att. A))

13.10.280 Flow control facility.
"Flow control facility" means a drainage facility designed to mitigate the impacts of increased surface and stormwater runoff generated by site development in accordance with the drainage

requirements in this chapter. A flow control facility is designed either to hold water for a considerable length of time and then release it by any combination of evaporation, plant transpiration or infiltration into the ground or to hold runoff for a short period of time and then release it to the conveyance system. (Ord. O2011-304 § 1 (Att. A))

13.10.290 Forest practices.
"Forest practices" means any activity conducted on or directly pertaining to forest land and relating to growing, harvesting, or processing timber, as defined in Chapter 222-16 WAC. (Ord. O2011-304 § 1 (Att. A))

13.10.300 Full drainage review.
"Full drainage review" means the evaluation required by Chapter 13.20 SMC for any proposed project, unless the project is subject to ~~small~~ simplified ~~project~~ drainage review, targeted drainage review, direct drainage review or large project drainage review, that:
(1) Would result in 2,000 square feet or more of new plus replaced impervious surface; or
(2) Would result in 7,000 square feet or more of land disturbing activity.~~ould result in 35,000 square feet or more of new pervious surface; or~~
~~(3) Is a redevelopment project on one or more parcels where the total of new and replaced impervious surface is 5,000 square feet or more and when the valuation of proposed improvements exceeds 50 percent of the assessed value of the existing site improvements, including interior improvements and excluding required mitigation and frontage improvements. (Ord. O2011-304 § 1 (Att. A))~~

13.10.310 Groundwater.
"Groundwater" means all waters that exist beneath the land surface or beneath the bed of any ~~stream, lake or reservoir or other body of~~ surface water, ~~whatever may be the geological formation or structure in which such water stands or flows, percolates or otherwise moves~~. (Ord. O2011-304 § 1 (Att. A))

13.10.320 High-use site.
"High-use site" means a commercial, industrial or road intersection site that generates a higher than average number of vehicle turnovers or has other characteristics that generate the potential for chronic oil accumulation. "High-use site" includes:
(1) A commercial or industrial site subject to:
(a) An expected daily traffic count greater than 100 vehicles per 1,000 square feet of gross building area;
(b) Petroleum storage or transfer in excess of 1,~~000~~ 500 gallons per year, not including routine fuel oil storage or transfer; or
(c) Use, storage or maintenance of a fleet of 25 or more diesel vehicles each weighing over 10 tons; or
(2) A road intersection with average daily traffic counts of 25,000 vehicles or more on the main roadway and 15,000 or more vehicles on any intersecting roadway, excluding pedestrian or bicycle use improvement projects. (Ord. O2011-304 § 1 (Att. A))

13.10.330 Hydraulically connected.
"Hydraulically connected" means connected through surface flow or water features such as wetlands or lakes. (Ord. O2011-304 § 1 (Att. A))

13.10.340 Impervious surface.
"Impervious surface" means a hard surface area that either prevents or retards the entry of water into the soil mantle as under natural conditions before development; or that causes water to run off the surface in greater quantities or at an increased rate of flow compared to the flow present under natural conditions prior to development (see also "new impervious surface"). Common impervious surfaces include, but are not limited to, roof, walkways, patios, driveways, parking lots, or storage areas, areas that are paved, graveled or made of packed or oiled earthen materials or other surfaces that similarly impede the natural infiltration of surface water or stormwater. For the purposes of applying the impervious surface thresholds and exemptions contained in the Surface Water Design Manual, permeable pavement, vegetated roofs, and pervious surfaces with underdrains designed to collect stormwater runoff are considered impervious surface while an open uncovered flow control or water quality facility is not. However, for the purposes of computing runoff, uncovered flow control or water quality facilities shall be modeled as impervious surfaces as specified in Chapter 3 of the Surface Water Design Manual.~~means a hard surface area which either prevents or retards the entry of water into the soil mantle as it entered under natural conditions prior to development, and/or a hard surface area which causes water to run off the surface in greater quantities or at an increased rate of flow from the flow present under natural conditions prior to development. Common impervious surfaces include, but are not limited to, roofs, walkways, patios, driveways, parking lots, storage areas, areas which are paved, graveled or made of packed or oiled earthen materials or other surfaces which similarly impede the natural infiltration of surface and stormwater. Open, uncovered flow control facilities shall not be considered as impervious surfaces for the purpose of this chapter.~~ (Ord. O2011-304 § 1 (Att. A))

13.10.350 Improvement.
"Improvement" means a permanent, human-made, physical change to land or real property including, but not limited to, buildings, streets, driveways, sidewalks, crosswalks, parking lots, water mains, sanitary and storm sewers, drainage facilities and landscaping. (Ord. O2011-304 § 1 (Att. A))

13.10.360 Land disturbing activity.
"Land disturbing activity" means an activity that results in a change in the existing soil cover, both vegetative and nonvegetative, or to the existing soil topography. "Land disturbing activity" includes, but is not limited to, demolition, construction, clearing, grading, filling, excavation and compaction. "Land disturbing activity" does not include tilling conducted as part of agricultural practices, landscape maintenance or gardening. (Ord. O2011-304 § 1 (Att. A))

13.10.370 Land use code.
"Land use code" means restrictions on the type of development for a specific parcel of land as identified by records maintained by the City of Sammamish as modified or supplemented by information resulting from investigation by the division. Land use codes are preliminary

indicators of the extent of impervious surface and are used in the initial analysis to assign an appropriate rate category for a specific parcel. (Ord. O2011-304 § 1 (Att. A))

13.10.380 Lake management plan.
"Lake management plan" means a plan describing the lake management recommendations and requirements adopted by public rule for managing water quality within individual lake basins. Adopted lake management plans are available from the department. (Ord. O2011-304 § 1 (Att. A))

13.10.390 Large project drainage review.
"Large project drainage review" means the evaluation required by Chapter 13.20 SMC for any proposed project that:
(1) Has an urban plan development land use designation in the Sammamish comprehensive plan land use map;
(2) Would, at full buildout of the project site, result in 50 acres or more of new impervious surface within a drainage subbasin or a number of subbasins hydraulically connected across subbasin boundaries; or
(3) Has a project site of 50 acres or more within a critical aquifer recharge area, as defined in SMC Title 21A. (Ord. O2011-304 § 1 (Att. A))

13.10.400 Licensed civil engineer.
"Licensed civil engineer" means a person registered with the state of Washington as a professional engineer in civil engineering. (Ord. O2011-304 § 1 (Att. A))

13.10.410 Maintenance.
"Maintenance" means those usual activities taken to prevent a decline, lapse or cessation in the use of currently serviceable structures, facilities, equipment or systems, if there is no expansion of the structure, facilities, equipment or system and there are no significant hydrologic impacts. "Maintenance" includes the repair or replacement of nonfunctional facilities or the replacement of existing structures with different types of structures, if the repair or replacement is required by one or more environmental permits or to meet current engineering standards and the functioning characteristics of the original facility or structure are not changed. (Ord. O2011-304 § 1 (Att. A))

13.10.420 Master drainage plan.
"Master drainage plan" means a comprehensive drainage control plan for projects subject to large project drainage review and intended to prevent significant adverse impacts to surface water and groundwater,~~the natural and constructed drainage system,~~ both on and off site. (Ord. O2011-304 § 1 (Att. A))

13.10.430 National Pollutant Discharge Elimination System.
"National Pollutant Discharge Elimination System" or "NPDES" means the national program for controlling pollutants from point source discharges directly into waters of the United States under the Clean Water Act. (Ord. O2011-304 § 1 (Att. A))

13.10.440 National Pollutant Discharge Elimination System permit.
"National Pollutant Discharge Elimination System permit" means an authorization, license or equivalent control document issued by the Environmental Protection Agency or the Washington State Department of Ecology to implement the requirements of the NPDES program. (Ord. O2011-304 § 1 (Att. A))

13.10.450 Native vegetated surface.
"Native vegetated surface" means a surface in which the soil conditions, ground cover and species of vegetation are like those of the original native condition for the site, as more specifically set forth in the Surface Water Design Manual. (Ord. O2011-304 § 1 (Att. A))

13.10.460 Natural discharge location.
"Natural discharge location" means the location where runoff leaves the project site under existing site conditions as defined in the Surface Water Design Manual. (Ord. O2011-304 § 1 (Att. A))

13.10.470 Natural surface water drainage system.
"Natural surface water drainage system" means such landscape features as rivers, streams, lakes and wetlands. This system circulates water in a complex hydrological cycle. (Ord. O2011-304 § 1 (Att. A))

13.10.480 New impervious surface.
"New impervious surface" means the creation of a hard or compacted surface such as roofs, pavement, gravel or dirt or the addition of a more compacted surface such as the paving of existing dirt or gravel. Permeable pavement and vegetated roofs are considered new impervious surface for purposes of determining whether the thresholds for application of minimum requirements are exceeded, as are lawns, landscaping, sports fields, golf courses, and other areas that have modified runoff characteristics resulting from the addition of underdrains designed to collect stormwater runoff. Open, uncovered retention/detention facilities shall not be considered impervious surfaces for purposes of determining whether the thresholds for application of minimum requirements are exceeded. Open, uncovered retention/detention facilities shall be considered impervious surfaces for purposes of runoff modeling. (Ord. O2011-304 § 1 (Att. A))

13.10.490 New pervious surface.
"New pervious surface" means the conversion of a native vegetated surface or other native surface to a nonnative pervious surface, including, but not limited to, pasture land, grassland, cultivated land, lawn, landscaping or bare soil or any alteration of existing nonnative pervious surface that results in increased surface and stormwater runoff as defined in the Surface Water Design Manual. (Ord. O2011-304 § 1 (Att. A))

13.10.500 Open space.
"Open space" means any parcel, property or portion thereof classified for current use taxation under Chapter 20.36 KCC and Chapter 84.34 RCW, or for which the development rights have been sold to King County under Chapter 26.04 KCC. This definition includes lands which have been classified as open space, agricultural or timber lands under criteria contained in Chapter 20.36 KCC and Chapter 84.34 RCW. (Ord. O2011-304 § 1 (Att. A))

13.10.510 Parcel.
"Parcel" means the smallest separately segregated unit or plot of land having an identified owner, boundaries and surface area which is documented for property tax purposes and given a tax lot number by the King County assessor. (Ord. O2011-304 § 1 (Att. A))

13.10.520 Person.
"Person" means an individual and his or her agent or assign, municipality, political subdivision, government agency, partnership, corporation, business or any other entity. (Ord. O2011-304 § 1 (Att. A))

13.10.525 Pervious surface.
"Pervious surface" means any surface material that allows stormwater to infiltrate into the ground. Examples include lawn, landscape, pasture, and native vegetation areas. Note for purposes of threshold determination and runoff volume modeling for detention and treatment, vegetated roofs and permeable pavements are to be considered impervious surfaces along with lawns, landscaping, sports fields, golf courses, and other areas that have modified runoff characteristics resulting from the addition of underdrains.

13.10.530 Pollution-generating impervious surface.
"Pollution-generating impervious surface" means an impervious surface considered to be a significant source of pollutants in surface and stormwater runoff. "Pollution-generating impervious surface" includes those surfaces subject to vehicular use or storage of erodible or leachable materials, wastes or chemicals and that receive direct rainfall or the run-on or blow-in of rainfall. A covered parking area would be included if runoff from uphill could regularly run through it or if rainfall could regularly blow in and wet the pavement surface. Metal roofs are also considered pollution-generating impervious surfaces unless they are treated to prevent leaching. Pollution-generating impervious surfaces include roofs that are exposed to the venting of significant amounts of dusts, mists, or fumes from manufacturing, commercial, or other indoor activities. They also include vegetated roofs exposed to pesticides, fertilizers, or loss of soil. Lawns, landscaping, sports fields, golf courses, and other areas that have modified runoff characteristics resulting from the addition of underdrains that have the pollution generating characteristics described under the "pollution-generating pervious surface" definition are also considered PGIS. (Ord. O2011-304 § 1 (Att. A))

13.10.540 Pollution-generating pervious surface.
"Pollution-generating pervious surface" means a nonimpervious surface considered to be a significant source of pollutants in surface and stormwater runoff. "Pollution-generating pervious surfaces" include surfaces subject to the use of pesticides and fertilizers, to the use or storage of erodible or leachable materials, wastes or chemicals or to the loss of soil. "Pollution-generating pervious surface" includes, but is not limited to, the lawn and landscaped areas of a residential or commercial site, golf course, park sports field and City-standard grassed modular grid pavement. (Ord. O2011-304 § 1 (Att. A))

13.10.550 Project.
"Project" means any proposed action to alter or develop a site that may also require drainage review. (Ord. O2011-304 § 1 (Att. A))

13.10.560 Project site.
"Project site" means the portion of a site and any off-site areas subject to proposed project activities, alterations and improvements including those required by this chapter. (Ord. O2011-304 § 1 (Att. A))

13.10.570 Rate category.
"Rate category" means the classification in this chapter given to a parcel in the service area based upon the type of land use on the parcel and the percentage of impervious surface area contained on the parcel. (Ord. O2011-304 § 1 (Att. A))

13.10.580 Redevelopment project.
"Redevelopment project" means a project that proposes to add, replace or modify impervious surface for purposes other than a residential subdivision or maintenance on a site that:
(1) Is already substantially developed in a manner that is consistent with its current zoning or with a legal nonconforming use; or
(2) Has an existing impervious surface coverage of 35 percent or more. (Ord. O2011-304 § 1 (Att. A))

13.10.590 Replaced impervious surface.
"Replaced impervious surface" means an existing impervious surface proposed to be removed and reestablished as impervious surface, excluding impervious surface removed for the sole purpose of installing utilities or performing maintenance on underground infrastructure. For structures, removed means the removal of buildings down to the foundation. For other impervious surfaces, removed means the removal down to base course or bare soil. It does not include the removal of pavement material through grinding or other surface modification unless the entire layer of PCC or AC is removed. Replaced impervious surface also includes impervious surface that is moved from one location to another on the project site where the following two conditions are met: (A) the area from which the impervious surface is moved from will be restored to the same or better runoff discharge characteristics as the area being covered by the moved impervious surface, and (B) impervious surface at the new location is either designated as non- pollution generating or the pollution generating characteristics remain unchanged compared to that of the original location.~~. For purposes of this definition, "removed" includes the removal of buildings down to bare soil or the removal of Portland cement concrete slabs or pavement or asphaltic concrete pavement.~~ (Ord. O2011-304 § 1 (Att. A))

13.10.600 Residence.
"Residence" means a building or structure or portion thereof, designed for and used to provide a place of abode for human beings. The term residence includes the term "residential" or "residential unit" as referring to the type of or intended use of a building or structure. (Ord. O2011-304 § 1 (Att. A))

13.10.610 Residential parcel.
"Residential parcel" means any parcel which contains no more than three residences or three residential units which are within a single structure and is used primarily for residential purposes. (Ord. O2011-304 § 1 (Att. A))

13.10.620 Runoff.
"Runoff" means that portion of water originating from rainfall and other precipitation that flows over the surface or just below the surface from where it fell and is found in drainage facilities, rivers, streams, springs, seeps, ponds, lakes, wetlands and shallow groundwater as well as on ground surfaces. For the purpose of this definition, groundwater means all waters that exist beneath the land surface or beneath the bed of any stream, lake or reservoir, or other body surface water, whatever may be the geological formation or structure in which such water stands or flows, percolates or otherwise moves. (Ord. O2011-304 § 1 (Att. A))

13.10.630 Salmon conservation plan.
"Salmon conservation plan" means a plan and all implementing regulations and procedures including, but not limited to, land use management adopted by ordinance, capital projects, public education activities and enforcement programs for conservation and recovery of salmon within a water resource inventory area designated by the state under WAC 173-500-040. (Ord. O2011-304 § 1 (Att. A))

13.10.640 Shared facility.
"Shared facility" means a drainage facility designed to meet one or more of the requirements of Chapter 13.20 SMC for two or more separate projects contained within a basin. Shared facilities usually include shared financial commitments for those drainage facilities. (Ord. O2011-304 § 1 (Att. A))

13.10.650 Service area.
"Service area" means the incorporated City of Sammamish. (Ord. O2011-304 § 1 (Att. A))

13.10.655 Simplified drainage review.
"Simplified drainage review" means the drainage review for a proposed single family residential project or agricultural project that: results in less than 5,000 square feet of new plus replaced pollution generating impervious surface, results in less than ¾ acre of pollution generating pervious surface, limits target impervious and pervious surface as specified in the Surface Water Design Manual, and meets the simplified drainage requirements specified in Appendix C of the Surface Water Design Manual, including flow control best management practices, erosion and sediment control measures, and drainage plan submittal requirements.

13.10.660 Site.
"Site" means a single parcel, or two or more contiguous parcels that are under common ownership or documented legal control, used as a single parcel for a proposed project for purposes of applying for authority from the City of Sammamish to carry out a proposed project. For projects located primarily within dedicated rights-of-way, "site" includes the entire width of right-of-way subject to improvements proposed by the project. (Ord. O2011-304 § 1 (Att. A))

~~**13.10.670 Small project drainage review.**~~
~~"Small project drainage review" means the drainage review for a proposed single-family residential project or agricultural project that:~~
~~(1) Would result in:~~
~~(a) Ten thousand square feet or less of total impervious surface added on or after January 8, 2001; or~~
~~(b) Four percent or less of total impervious surface on a site as specified in the Surface Water Design Manual; and~~
~~(2) Meets the small project drainage requirements specified in the Surface Water Design Manual, including flow control best management practices, erosion and sediment control measures and drainage plan submittal requirement; and~~
~~(3) Limits new pervious surface as specified in the Surface Water Design Manual. (Ord. O2011-304 § 1 (Att. A))~~

13.10.680 Source control BMP.
"Source control BMP" means a BMP intended to prevent contaminants from entering surface and stormwater or groundwater including the modification of processes to eliminate the production or use of contaminants. "Source control BMPs" can be either structural or nonstructural. Structural source control BMPs involve the construction of a physical structure on site, or other type of physical modification to a site. An example of a structural source control BMP is building a covered storage area. A nonstructural source control BMP involves the modification or addition of managerial or behavioral practices. An example of a nonstructural source control BMP is using less toxic alternatives to current products or sweeping parking lots. (Ord. O2011-304 § 1 (Att. A))

13.10.690 State Waste Discharge Permit.
"State Waste Discharge Permit" means an authorization, license, or equivalent control document issued by the Washington State Department of Ecology in accordance with Chapter 173-216 WAC. (Ord. O2011-304 § 1 (Att. A))

13.10.700 Stormwater compliance plan.
"Stormwater compliance plan" means a plan or study and all regulations and procedures that have been adopted by the City to implement the plan or study, including, but not limited to, capital projects, public education activities and enforcement programs for managing stormwater quantity and quality discharged from the City's municipal separate storm sewer system in compliance with the National Pollutant Discharge Elimination System permit program under the Clean Water Act. (Ord. O2011-304 § 1 (Att. A))

13.10.710 Stormwater plan.
"Stormwater plan" means a City of Sammamish ordinance specifying the stormwater control facilities that will be funded by a bond issue. (Ord. O2011-304 § 1 (Att. A))

13.10.720 Stormwater Pollution Prevention Manual.
"Stormwater Pollution Prevention Manual" means the manual adopted in accordance with Chapter 2.55 SMC, and supporting documentation referenced or incorporated in the manual,

describing best management practices and procedures for existing facilities and existing and new activities not covered by the Surface Water Design Manual. (Ord. O2011-304 § 1 (Att. A))

13.10.730 Subbasin.
"Subbasin" means a geographic area that:
(1) Drains to a stream or water body named and noted on common maps; and
(2) Is contained within the basin of the stream or water body. (Ord. O2011-304 § 1 (Att. A))

13.10.740 Surface and stormwater.
"Surface and stormwater" means water originating from rainfall and other precipitation that is found on ground surfaces and in drainage facilities, rivers, streams, springs, seeps, ponds, lakes, wetlands, as well as shallow groundwater. (Ord. O2011-304 § 1 (Att. A))

13.10.750 Surface and stormwater management services.
"Surface and stormwater management services" means the services provided by the surface water management program, including but not limited to basin planning, facilities maintenance, regulation, financial administration, public involvement, drainage investigation and enforcement, aquatic resource restoration, surface and stormwater quality and environmental monitoring, natural surface water drainage system planning, intergovernmental relations and facility design and construction. (Ord. O2011-304 § 1 (Att. A))

13.10.760 Surface and stormwater management system.
"Surface and stormwater management system" means constructed drainage facilities and any natural surface water drainage features that do any combination of collection, storing, controlling, treating or conveying surface and stormwater. (Ord. O2011-304 § 1 (Att. A))

13.10.770 Surface Water Design Manual.
"Surface Water Design Manual" means the manual, and supporting documentation referenced or incorporated in the manual, describing surface and stormwater design and analysis requirements, procedures and guidance that has been formally adopted by rule under the procedures in Chapter 2.55 SMC. The Surface Water Design Manual is available from the department of public works or its successor agency. (Ord. O2011-304 § 1 (Att. A))

13.10.780 Surface water management fee protocols.
"Surface water management fee protocols" or "SWM fee protocols" means the surface water management fee standards and procedures that have been formally adopted by rule under the procedures specified in Chapter 2.55 SMC. The SWM fee protocols are available from the department of public works or its successor agency. (Ord. O2011-304 § 1 (Att. A))

13.10.790 Treatment BMP.
"Treatment BMP" means a BMP intended to remove contaminants once they are already contained in stormwater. Examples of treatment BMPs include oil/water separators, biofiltration swales and wetponds. (Ord. O2011-304 § 1 (Att. A))

13.10.800 Targeted drainage review.
"Targeted drainage review" means an abbreviated evaluation required by Chapter 13.20 SMC for certain types of proposed projects that are not subject to full or large project drainage review. Targeted drainage review may be required for some projects in ~~small~~ simplified ~~project~~ drainage review. (Ord. O2011-304 § 1 (Att. A))

13.10.810 Undeveloped parcel.
"Undeveloped parcel" means any parcel which has not been altered from its natural state by the construction, creation or addition of impervious surface. (Ord. O2011-304 § 1 (Att. A))

13.10.820 Water quality ~~treatment~~ facility.
"Water quality ~~treatment~~ facility" means a drainage facility designed to mitigate the impacts of increased pollutants in stormwater runoff generated by site development. A water quality facility uses processes that include but are not limited to settling, filtration, adsorption, and absorption to decrease pollutant concentrations and loadings in stormwater runoff.~~means a drainage facility designed to reduce pollutants once they are already contained in surface and stormwater runoff. Water quality treatment facilities are the structural component of best management practices. When used singly or in combination, water quality treatment facilities reduce the potential for contamination of either surface or groundwaters, or both.~~ (Ord. O2011-304 § 1 (Att. A))

ATTACHMENT C:

AMENDED CHAPTER 13.20 SMC

SURFACE WATER RUNOFF REGULATIONS

Sections:

13.20.010 Purpose.
13.20.020 Drainage review – When required – Type.
13.20.030 Drainage review – Requirements.
13.20.040 Critical drainage and/or critical erosion areas.
13.20.050 Engineering plans for the purposes of drainage review.
13.20.060 Construction timing and final approval.
13.20.070 Liability insurance required.
13.20.080 Financial guarantees authorized.
13.20.090 Drainage facilities accepted by Sammamish for maintenance.
13.20.100 Drainage facilities not accepted by Sammamish for maintenance.
13.20.110 Hazards.
13.20.120 Administration.
13.20.130 Enforcement.
13.20.140 Implementation, review and revision.
13.20.150 Severability.

13.20.010 Purpose.

The purpose of this chapter is to promote the public health, safety and welfare by providing for the comprehensive management of surface and stormwaters and erosion control, especially that which preserves and utilizes the many values of the City's natural drainage system including open space, fish and wildlife habitat, recreation, and education. By conducting programs to reduce flooding, erosion, and sedimentation; prevent and mitigate habitat loss; enhance groundwater recharge; and prevent water quality degradation through the implementation of comprehensive and thorough permit review, construction inspection, enforcement, and maintenance, the effectiveness of the requirements contained in this chapter will be promoted. (Ord. O2011-304 § 1 (Att. A))

13.20.020 Drainage review – When required – Type.

(1) Drainage review is required when any proposed project is subject to a City of Sammamish development permit or approval and:

(a) Would result in 2,000 square feet or more of new impervious surface, replaced impervious surface or new plus replaced impervious surface; or

(a.1) Would result in 500 square feet or more of new impervious surface, replace impervious surface or new plus replaced impervious surface within an historic plat as defined and mapped in Attachment B at the end of this section; or

(a.2) Would result in 500 square feet or more of new impervious surface~~, replaced impervious surface, or new plus replaced impervious surface~~ within a landslide hazard drainage area as defined in ~~SMC 21A.50.260; or~~the adopted Sammamish Addendum to the Surface Water Design Manual.

(b) Would involve 7,000 square feet or more of land disturbing activity; or

(c) Would construct or modify a drainage pipe or ditch that is 12 inches or more in size or depth or receives surface and stormwater runoff from a drainage pipe or ditch that is 12 inches or more in size or depth; or

(d) Contains or is adjacent to a flood hazard area as defined in SMC Title 15 or 21A; or

(e) Is located within a critical drainage area; or

(f) Is a redevelopment project proposing $100,000 or more of improvements to an existing high-use site; or

(g) Is a redevelopment project on a site in which the total of new plus replaced impervious surface is 5,000 square feet or more and whose valuation of proposed improvements, including interior improvements and excluding required mitigation and frontage improvements, exceeds 50 percent of the assessed value of the existing site improvements.

(2) The drainage review for any proposed project shall be scaled to the scope of the project's size, type of development and potential for impacts to the regional surface water system to facilitate preparation and review of project applications. If drainage review for a proposed project is required under subsection (1) of this section, the City shall determine which of the following drainage reviews apply as specified in the Surface Water Design Manual:

(a) ~~Small project~~Simplified drainage review;

(b) Targeted drainage review;

(c) Full drainage review; or

(d) Large project drainage review.

Exhibit 1

ATTACHMENT B

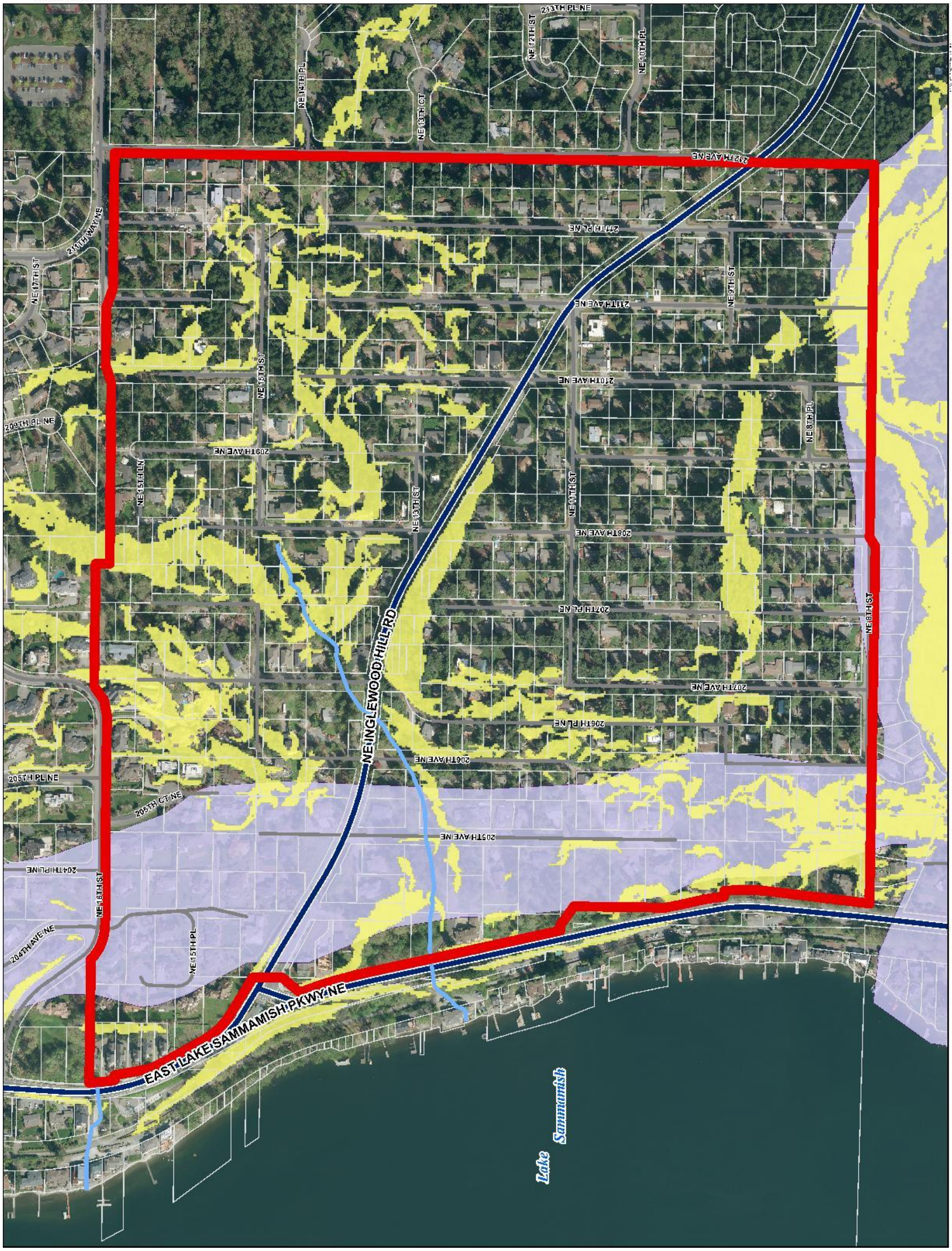

(Ord. O2015-389 § 1 (Att. A); Ord. O2011-304 § 1 (Att. A))

13.20.030 Drainage review – Requirements.

(1) A proposed project required to have drainage review by this chapter must meet each of the following core requirements which are described in detail in the Surface Water Design Manual.

Projects subject only to ~~small project~~simplified drainage review that meet the ~~small project~~simplified drainage requirements specified in the Surface Water Design Manual, including flow control best management practices, erosion and sediment control measures and drainage plan submittal requirements are deemed to comply with the following core requirements:

(a) Core Requirement 1 – Discharge at the Natural Location. All surface and stormwater runoff from a project shall be discharged at the natural location so as not to be diverted onto, or away from, downstream properties. The manner in which runoff is discharged from the project site shall not create a significant adverse impact to downhill properties or drainage systems as specified in the discharge requirements of the Surface Water Design Manual;

(b) Core Requirement 2 – Off-Site Analysis. The initial application submittal for proposed projects shall include an off-site analysis report that assesses potential off-site drainage and water quality impacts associated with development of the proposed site and proposes appropriate mitigations to those impacts. This initial submittal shall include, at minimum, a level one downstream analysis as described in the Surface Water Design Manual. If impacts are identified, the proposed projects shall meet any applicable problem-specific requirements as specified in the Surface Water Design Manual;

(c) Core Requirement 3 – Flow Control. Proposed projects that would result in ~~2~~5,000 square feet or more of new plus replaced impervious surface or ~~35,000 square feet~~3/4 acre or more of new pervious surface, ~~or that are redevelopment projects that would result in a total of 5,000 square feet or more of new and replaced impervious surface,~~ shall provide flow control facilities or flow control BMPs, or both, to control surface and stormwater runoff generated by new impervious surface, new pervious surface, replaced impervious surface and any existing impervious surface added on or after January 8, 2001, as specified in the Surface Water Design Manual. Flow control facilities shall meet the area-specific flow control facility requirements and the flow control facility implementation requirements applicable to the project site as specified in the Surface Water Design Manual. Flow control BMPs shall also be applied as specified in the Surface Water Design Manual. Projects subject to area-specific flow control facility requirements shall meet one of the flow control facility performance criteria listed in subsections (1)(c)(i) and (ii) of this section, as directed by the Surface Water Design Manual. The Inglewood, Thompson and Pine Lake Creek basins, and areas draining to the Beaver Lake basin, require level three flow control. The remainder of the City requires level two flow control unless downstream problems, as determined by the City of Sammamish, dictate the higher level of protection of level three flow control.

(i) Level two shall meet level one criteria and also match the predeveloped site's discharge durations for the predeveloped peak discharge rates between the 50 percent of the two-year peak flow through the 50-year peak flow; or

(ii) Level three shall meet level two criteria and also match the predeveloped site's peak discharge rate for the 100-year return period;

(d) Core Requirement 4 – Conveyance System. All engineered conveyance system elements for proposed projects shall be analyzed, designed and constructed to provide the minimum level of protection against overtopping, flooding, erosion and structural failure as specified

by the conveyance requirements for new and existing systems and conveyance implementation requirements described in the Surface Water Design Manual;
(e) Core Requirement 5 – Erosion and Sediment Control. All proposed projects that will clear, grade or otherwise disturb the site shall provide erosion and sediment control that prevents, to the maximum extent practicable, the transport of sediment from the site to drainage facilities, water resources and adjacent properties. Erosion and sediment controls shall be applied in accordance with SMC Title 16 as specified by the temporary erosion and sediment control measures and performance criteria and implementation requirements in the City of Sammamish Surface Water Design Manual;
(f) Core Requirement 6 – Maintenance and Operation. Maintenance of all drainage facilities in compliance with Sammamish maintenance standards is the responsibility of the applicant or property owner as described in the Surface Water Design Manual, except those facilities for which Sammamish assumes maintenance and operation as described in this chapter and the Surface Water Design Manual;
(g) Core Requirement 7 – Financial Guarantees and Liability. All drainage facilities constructed or modified for projects, except downspout infiltration and dispersion systems for single-family residential lots, must comply with the liability requirements of this chapter and the financial guarantee requirements of SMC Title 27A;
(h) Core Requirement 8 – Water Quality. Proposed projects that would result in 5,000 square feet or more of new plus replaced pollution generating impervious surface or ~~35,000 square feet~~3/4 acre or more of new pollution-generating pervious surface, ~~or that are redevelopment projects that would result in a total of 5,000 square feet or more of new and replaced pollution-generating impervious surface,~~ shall provide water quality treatment facilities to treat polluted surface and stormwater runoff generated by new or replaced pollution-generating impervious surface, new pollution-generating pervious surface and any existing pollution-generating impervious surface added on or after January 8, 2001, as specified in the Surface Water Design Manual. However, pervious surfaces are specifically excluded if there is a good faith agreement with the King Conservation District to implement a farm management plan for agricultural uses, and pervious areas for other uses are specifically excluded if the City of Sammamish approves a landscape management plan that controls pesticides and fertilizers leaving the site. Water quality treatment facilities shall meet the area-specific water quality treatment requirements and the water quality implementation requirements applicable to the project site as specified in the Surface Water Design Manual. The facilities specified by these requirements are designed to reduce pollutant loads according to the applicable annual average performance goals listed in subsections (1)(h)(i) through (iv) of this section for 95 percent of the annual average runoff volume:

(i) For basic water quality: remove 80 percent of the total suspended solids;
(ii) For enhanced basic water quality: remove 50 percent of the total zinc;
(iii) For sensitive lake protection: remove 50 percent of the total phosphorus; and
(iv) For sphagnum bog protection: remove 50 percent of the total phosphorus and 40 percent of the total nitrate plus nitrite. The discharge shall maintain a pH of less than 6.5 and an alkalinity of less than 10 milligrams per liter.

(i) Core Requirement 9 – Flow Control BMPs. Proposed projects that would result in 2,000 square feet or more of new plus replaced impervious surface or 7,000 square feet or more of land disturbing activity shall provide onsite flow control BMPs to mitigate the impacts of surface and stormwater runoff generated by new impervious surface, new pervious surface, existing impervious surfaces, and replaced impervious surface targeted for mitigation as specified in the Surface Water Design Manual.

(2) A proposed project required by this chapter to have drainage review shall meet any of the following special requirements which apply to the site and which are described in detail in the Surface Water Design Manual. The City shall verify if a proposed project is subject to and must meet any of the following special requirements.

(a) Special Requirement 1 – Other Adopted Area-Specific Requirements. If a proposed project is in a designated critical drainage area, or is in an area included in an adopted master drainage plan, basin plan, salmon conservation plan, stormwater compliance plan, flood hazard reduction plan, lake management plan or shared facility plan, then the proposed project shall meet the applicable drainage requirements of the critical drainage area, master drainage plan, basin plan, salmon conservation plan, stormwater compliance plan, flood hazard reduction plan, lake management plan or shared facility plan;

(b) Special Requirement 2 – Floodplain/Floodway Delineation. If a proposed project contains or is adjacent to a stream, lake, wetland or closed depression, or if other City regulations require study of flood hazards relating to the proposed project, the 100-year floodplain boundaries and floodway shall be determined and delineated on the site improvement plans and profiles and any final maps prepared for the proposed project. The flood hazard study shall be prepared for as specified in the Surface Water Design Manual;

(c) Special Requirement 3 – Flood Protection Facilities. If a proposed project contains or is adjacent to a stream that has an existing flood protection facility, such as a levee, revetment or berm, or proposes to either construct a new or modify an existing flood protection facility, then the flood protection facilities shall be analyzed and designed as specified in the Surface Water Design Manual to conform with the Federal Emergency Management Agency regulations as found in 44 C.F.R.;

(d) Special Requirement 4 – Source Control. If a proposed project requires a commercial building or commercial site development permit, then water quality source controls shall be applied to prevent rainfall and runoff from coming into contact with pollutants to the maximum extent practicable. Water quality source controls shall be applied in accordance with this chapter, the Stormwater Pollution Prevention Manual and the Surface Water Design Manual. All structural source controls shall be identified on the site improvement plans and profiles or final maps prepared for the proposed project; and

(e) Special Requirement 5 – Oil Control. If a proposed project is a high-use site or is a redevelopment project proposing $100,000 or more of improvements to an existing high-use site, then oil control shall be applied to all runoff from the high-use portion of the site as specified in the Surface Water Design Manual.

(3)(a) An adjustment to the requirements contained in this section or other requirements in the Surface Water Design Manual may be proposed. The resulting development shall be subject to all of the remaining terms and conditions of this chapter and the adjustment shall:

(i) Produce a compensating or comparable result in the public interest; and

(ii) Meet this chapter's objectives of safety, function, appearance, environmental protection and maintainability based upon sound engineering judgment.

(b) If complying with subsection (3)(a)(i) of this section will deny all reasonable use of a property, the best practicable alternative shall be obtained as determined by the director according to the adjustment process defined in the Surface Water Design Manual.

(c) Requests for adjustments that may conflict with any other City requirement shall require review and concurrence by the applicable City department.

(d) A request for an adjustment is a Type 1 land use decision as provided for in SMC Title 20 and shall be processed in accordance with the procedures specified in the Surface Water Design Manual.

(e) The City may require monitoring of experimental designs and technology or untested applications proposed by the applicant in order to determine compliance with subsection (3)(a) of this section and the approved plans and conditions.

(f) An adjustment decision may be appealed by following the appeal procedures as specified in the Surface Water Design Manual. (Ord. O2011-304 § 1 (Att. A))

13.20.040 Critical drainage and/or critical erosion areas.

Development in areas where the department has determined that the existing flooding, drainage and/or erosion conditions present an imminent likelihood of harm to the welfare and safety of the surrounding community shall meet special drainage requirements set by the director until such time as the community hazard is alleviated. Such conditions may include the limitation of the volume of discharge from the subject property to predevelopment levels, preservation of wetlands or other natural drainage features or other controls necessary to protect against community hazard. Where alternate facility designs or methods will produce a compensating or comparable result in the public interest and which will meet this section's objectives of safety, function, appearance, environmental protection and maintainability, based upon sound engineering judgment, an adjustment to the special drainage requirements promulgated under this section may be proposed; provided, that the resulting development shall be subject to all of the remaining terms and conditions of this chapter. Where application of this section will deny all reasonable use of a property and a facility or design that produces a compensating or comparable result cannot be obtained, then a best practicable alternative may be approved by the director according to the adjustment process defined in the Surface Water Design Manual. These standards are in addition to the applicable standards of Chapter 21A.50 SMC. (Ord. O2011-304 § 1 (Att. A))

13.20.050 Engineering plans for the purposes of drainage review.

(1) These requirements are in addition to the submittal requirements established by Chapter 20.05 SMC.

(a) All engineering plans shall be submitted to the City for review in accordance with the Surface Water Design Manual except those drainage plans developed by, or under the review of, the City of Sammamish department of public works for either surface and stormwater capital improvement, repair, maintenance or restoration projects or other linear government agency projects, such as roadways, railways, pipelines, utility lines and trails.

(b) If engineering plans are returned for any reason, they shall be returned to the applicant.
(c) All master drainage plans, if required, shall be submitted to the City for review in accordance with the specifications in the Surface Water Design Manual. The master drainage plan process should commence at the same time as the State Environmental Policy Act (SEPA) process.
(d) Drainage plans not subject to review by the City under subsection (1)(a) of this section shall be reviewed by the department of public works in accordance with this chapter. Project applicability and compliance with this chapter shall be documented in writing and available for review.

(2) The expiration time frames as specified in the Surface Water Design Manual shall apply to all permit and approval applications.
(3) All plans shall be processed in accordance with the review procedures specified in the Surface Water Design Manual.
(4) Submittal procedures, definitions and specifications for the required contents of engineering plans are presented in the Surface Water Design Manual. (Ord. O2011-304 § 1 (Att. A))

13.20.060 Construction timing and final approval.

(1) No work related to permanent or temporary storm drainage control for a permitted development may proceed without the approval of the director.
(2) Erosion and sediment control measures associated with both the interim and permanent drainage systems shall be:
(a) Constructed in accordance with the approved plan prior to any grading or land clearing other than that associated with an approved erosion and sediment control plan; and
(b) Satisfactorily sequenced and maintained until all improvements, restoration, and landscaping associated with the permit and approvals for the project are completed and the potential for on-site erosion has passed.

(3) The applicant shall have constructed and have in operation those portions of the drainage facilities necessary to accommodate the control of surface and stormwater runoff discharging from the site before the construction of any other improvements or buildings on the site, or in accordance with SMC Title 19A. (Ord. O2011-304 § 1 (Att. A))

13.20.070 Liability insurance required.

The applicant required to construct the drainage facility pursuant to this chapter shall maintain a combined single limit per occurrence liability policy in the amount established annually by the City, which shall name City as an additional insured and protect the City from liability relating to the construction or maintenance of the facility until construction approval or acceptance for maintenance, whichever is last. Proof of this required liability policy shall be provided to the director prior to commencing construction of any drainage facility. If this liability insurance is not kept in effect as required, the City may initiate enforcement action pursuant to SMC Title 23. (Ord. O2011-304 § 1 (Att. A))

13.20.080 Financial guarantees authorized.
The City is authorized to require all applicants issued permits or approvals under the provisions of this title to post financial guarantees consistent with the provisions of SMC Title 27A. (Ord. O2011-304 § 1 (Att. A))

13.20.090 Drainage facilities accepted by Sammamish for maintenance.
(1) The City is responsible for the maintenance, including performance and operation, of drainage facilities which have formally been accepted for maintenance by the director.
(2) The City may assume maintenance of privately maintained drainage facilities only if the following conditions have been met:

(a) All necessary easements or dedications entitling the City to properly maintain the drainage facility have been conveyed to the City;

(b) The director has determined that the facility is in the dedicated public road right-of-way or that maintenance of the facility will contribute to protecting or improving the health, safety and welfare of the community based upon review of the existence of or potential for:

(i) Flooding,

(ii) Downstream erosion,

(iii) Property damage due to improper function of the facility,

(iv) Safety hazard associated with the facility,

(v) Degradation of water quality or in-stream resources, or

(vi) Degradation to the general welfare of the community; and

(c) The director has declared in writing acceptance of maintenance responsibility by the City. Copies of this document will be kept on file in the department of public works.

(3) The director may terminate the department's assumption of maintenance responsibilities in writing after determining that continued maintenance will not significantly contribute to protecting or improving the health, safety and welfare of the community based upon review of the existence of or potential for:

(a) Flooding;

(b) Downstream erosion;

(c) Property damage due to improper function of the facility;

(d) Safety hazard associated with the facility;

(e) Degradation of water quality or in-stream resources; or

(f) Degradation to the general welfare of the community.

Copies of this document will be kept on file in the department of public works.
(4) A drainage facility which does not meet the criteria of this section shall remain the responsibility of the applicant required to construct the facility and persons holding title to the property for which the facility was required. (Ord. O2011-304 § 1 (Att. A))

13.20.100 Drainage facilities not accepted by Sammamish for maintenance.
(1) The person or persons holding title to the property and the applicant required to construct a drainage facility shall remain responsible for the facility's continual performance, operation and maintenance in accordance with the standards and requirements of the department and

remain responsible for any liability as a result of these duties. This responsibility includes maintenance of a drainage facility which is:

(a) Under a maintenance guarantee or defect guarantee;

(b) A private road conveyance system;

(c) Released from all required financial guarantees prior to July 7, 1980;

(d) Located within and serving only one single-family residential lot;

(e) Located within and serving a multifamily or commercial site unless the facility is part of an approved shared facility plan;

(f) Located within or associated with a short subdivision or subdivision which handles runoff from an area of which less than two-thirds is designated for detached or townhouse dwelling units located on individual lots unless the facility is part of an approved shared facility plan;

(g) Previously terminated for assumption of maintenance responsibilities by the department in accordance with this chapter; or

(h) Not otherwise accepted by the City for maintenance.

(2) Prior to the issuance of any of the permits for any multifamily or commercial project required to have a flow control or water quality treatment facility, the applicant shall record a declaration of covenant as specified in the Surface Water Design Manual. The restrictions set forth in such covenant shall include, but not be limited to, provisions for notice to the persons holding title to the property of a City determination that maintenance and/or repairs are necessary to the facility and a reasonable time limit in which such work is to be completed.

(a) In the event that the titleholders do not effect such maintenance and/or repairs, the City may perform such work upon due notice. The titleholders are required to reimburse the City for any such work. The restrictions set forth in such covenant shall be included in any instrument of conveyance of the subject property and shall be recorded with the records and licensing services division of King County.

(b) The City may enforce the restrictions set forth in the declaration of covenant provided in the Surface Water Design Manual.

(3) Prior to the issuance of any of the permits and/or approvals for the project or the release of financial guarantees posted to guarantee satisfactory completion, the person or persons holding title to the subject property for which a drainage facility was required shall pay a fee established by the director as set forth in the City resolution to reasonably compensate the City for costs relating to inspection of the facility to ensure that it has been constructed according to plan and applicable specifications and standards.

(4) The duties specified in this section with regard to payment of inspection fees and reimbursement of maintenance costs shall be enforced against the person or persons holding title to the property for which the drainage facility was required.

(5) Where not specifically defined in this section, the responsibility for performance, operation and maintenance of drainage facilities and conveyance systems, both natural and constructed, shall be determined on a case-by-case basis. (Ord. O2011-304 § 1 (Att. A))

13.20.110 Hazards.

Whenever the director determines that any existing construction site, erosion and sedimentation problem and/or drainage facility poses a hazard to life and limb, endangers any

property, and/or adversely affects the condition or capacity of other drainage facilities, the safety and operation of City right-of-way, utilities, and/or other property owned or maintained by the City, the applicant/person to whom the permit was issued pursuant to this chapter, the owner of the property within which the drainage facility is located, the applicant/person responsible for maintenance of the facility, and/or other person or agent in control of said property, upon receipt of notice in writing from the director shall within the period specified therein repair or otherwise address the cause of the hazardous situation in conformance with the requirements of this chapter.

Should the director have reasonable cause to believe that the situation is so adverse as to preclude written notice, the director may take the measures necessary to eliminate the hazardous situation; provided, that the director shall first make a reasonable effort to locate the owner before acting. In such instances the applicant of whom a drainage plan was required pursuant to this chapter, the owner of the property and/or the person responsible for the maintenance of the facility shall be obligated for the payment of all costs incurred. If costs are incurred and a financial guarantee pursuant to this chapter or other City requirement has been posted, the director shall have the authority to collect against the financial guarantee to cover costs incurred. (Ord. O2011-304 § 1 (Att. A))

13.20.120 Administration.

(1) Administration.

(a) The director is authorized to promulgate and adopt administrative rules under the procedures specified in Chapter 2.55 SMC, for the purpose of implementing and enforcing the provisions of this chapter. Adopted administrative rules are available to the public from the department of public works. This includes, but is not limited to, the Surface Water Design Manual.

(b) The director is authorized to develop procedures for applying adopted rules and regulations during the review of permit applications for the development of land. These procedures may also be contained in the Surface Water Design Manual.

(2) Inspections. The director is authorized to make such inspections and take such actions as may be required to enforce the provisions of this chapter.

(3) Right of Entry. Whenever necessary to make an inspection to enforce any of the provisions of this chapter, monitor for proper function of drainage facilities or whenever the director has reasonable cause to believe that violations of this chapter are present or operating on a subject property or portion thereof, the director may enter such premises at all reasonable times to inspect the same or perform any duty imposed upon the director by this chapter; provided, that if such premises or portion thereof is occupied, the director shall first make a reasonable effort to locate the owner or other person having charge or control of the premises or portion thereof and demand entry.

(4) Access. Proper ingress and egress shall be provided to the director to inspect, monitor or perform any duty imposed upon the director by this chapter. The director shall notify the responsible party in writing of failure to comply with this access requirement. Failing to obtain a response within seven days from the receipt of notification, the director may order the work required completed or otherwise address the cause of improper access. The obligation for the payment of all costs that may be incurred or expended by the City in causing such work to be

done shall thereby be imposed on the person holding title to the subject property. (Ord. O2011-304 § 1 (Att. A))

13.20.130 Enforcement.
The City is authorized to enforce the provisions of this chapter, the ordinances and resolutions codified in it, and any rules and regulations promulgated thereunder pursuant to the enforcement and penalty provisions of SMC Title 23. (Ord. O2011-304 § 1 (Att. A))

13.20.140 Implementation, review and revision.
The department may administer a training program for users of the Surface Water Design Manual. The department may also conduct an ongoing research program to evaluate the effectiveness of the requirements in meeting the purpose of this chapter. This research program may examine, but not be limited to, hydrologic and hydraulic analysis methods, stream geomorphologic analysis methods, water quality, best management practices and erosion and sediment control measures. (Ord. O2011-304 § 1 (Att. A))

13.20.150 Severability.
If any provision of this chapter or its application to any person or property is held invalid, the remainder of the chapter or the application of the provision to other persons or property shall not be affected. (Ord. O2011-304 § 1 (Att. A))

Exhibit 1

Staff Response to City Council Questions
November 15, 2016 City Council Study Session

1. How is the City dealing with the leaky domestic water supply lines that might enter the stormwater system as groundwater? Should the stormwater facilities be sized to accommodate these flows?

   Stormwater facilities are sized to convey, collect and manage all stormwater that is expected to drain to the facility. Although water distribution system leakage is expected and generally averages around 7-10% of the water in a system, it is difficult to determine where the leaks are occurring (pipe joints, fittings, valves, etc). We anticipate that development of a groundwater seepage strategy as proposed in the Storm and Surface Water Management Comprehensive Plan will help identify possible locations of and propose actions to address groundwater seepages. Seepages could be from leaky water pipes or from natural groundwater interflow.

2. How are you planning to enforce and/or encourage the use of permeable pavement for property owners that are redoing parking lots?

   Resurfacing and general maintenance of parking lots will not require the use of Low Impact Development Best Management Practices such as permeable pavement. If an applicant is reconstructing a parking lot and removes the asphalt to affect the base course, then the applicant would be required to evaluate the feasibility of LID BMPs such as permeable pavement, dispersion, infiltration, or bioretention systems. We will provide materials to developers and the public to educate them on possible options for managing stormwater which will include information on permeable pavement.

3. Would the footprint of a home on a clustered lot be smaller? Is it really an incentive if the home is smaller?

   A clustered development may have a smaller lot size than a non-clustered development due to the goal of retaining portions of the site in their native condition and avoiding development on areas that may be better suited for stormwater management. The City regulates lot coverage as a percentage of the lot size that may be covered by structures. Consequently, the footprint of a home on a smaller lot will be required to be smaller. However, this can still be an incentive for many developers who weigh the costs of traditional stormwater management facilities that may take up quite a bit of space or be expensive to construct.

   There may also be a market for smaller lots/homes and the additional amenities of having green spaces and trails within the preserved natural areas. Given these options, the developer would weigh the incentive of having a few additional homes to sell and the amenities that can come with an LID development against the conventional design and use the approach they find most cost effective. Nothing in the amended LID code requires its use. However, based on feedback the City received from the Technical Stakeholder Committee, the proposed revision to the Low Impact Development chapter would make these incentives more attractive to developers.

4. How many applicants have used the incentives found in the City's Low Impact Development chapter (Chapter 21A.85 SMC)?

   Very few applications have been using the existing Chapter 21A.85 SMC. The stakeholders that were convened during the preparation of the amendments indicated that the existing incentives were not worth the cost or effort to implement the techniques that were required. The stakeholders indicated that awarding a graduated scale of technique points rather than the current all-or-nothing approach, would make the use of the LID site design techniques more attractive. This is the approach that is included in the proposed code amendments.

5. Who performs the Landslide Hazard Drainage Area evaluation? Is the evaluation done by the property owner?

   The Landslide Hazard Drainage Area maps are like other critical areas maps. The City's existing maps depict the approximate location of Landslide Hazard Drainage Areas. Field verification by a qualified professional and reviewed by City staff is paid for by the applicant and is required during the development of a site.

6. The definition of a "high use site" includes the "use, storage or maintenance of a fleet of 25 or more diesel vehicles each weighing over 10 tons." We do not have too many sites like these. Is there a reason that definition distinguishes between diesel and gasoline fueled vehicles?

   This is an existing definition that is not proposed to be amended. The distinction between diesel vehicles and other vehicles is common and is intended to differentiate large diesel vehicles from package vans.

7. I am delighted to see the emphasis on turning stormwater ponds into an amenity like Heritage Hills Park. This park detains stormwater in the winter, but is dry in the summer for recreation use.

   The proposed revisions to the design of stormwater ponds would encourage more facilities such as this.

8. The "typical" subdivision example shown should show street trees to show a more equitable comparison to the LID subdivision example. Please provide a new comparison.

   A new comparison is provided below.

Exhibit 2

100 lots

103 lots using LID Incentives

Exhibit 2

City Council Agenda Bill

Meeting Date: **December 6, 2016** Date Submitted: 11/30/2016

Originating Department: Public Works

Clearances:

- ☑ Attorney
- ☐ Admin Services
- ☑ City Manager
- ☐ Community Development
- ☐ Finance & IT
- ☐ Parks & Recreation
- ☐ Public Safety
- ☑ Public Works

Subject: Low Impact Development Code Updates

Action Required: Conduct Public Hearing and adopt the Low Impact Development Codes Update Ordinances

Exhibits:
1. Low Impact Development Codes Update Ordinance with attachments
2. Response to Council Comments

Budget: Not Applicable

Summary Statement

Public Works requests that a Public Hearing and First Reading of the Ordinance updating the Sammamish Municipal Code (SMC) Low Impact Development (LID) codes be held and that the Ordinance be adopted.

Updates to the SMC are intended to provide opportunities for development to incorporate LID principles such as minimizing impervious surfaces, minimizing native vegetation loss, and reducing stormwater runoff beyond the minimum LID requirements in the 2016 King County Surface Water Design Manual. Approval of this Ordinance by December 31, 2016 will ensure the City remains in compliance with its National Pollutant Discharge Elimination System (NPDES) permit.

Background

On November 1, 2016, the City of Sammamish Planning Commission recommended that the City Council adopt the updates to Sammamish Municipal Code (SMC) Low Impact Development (LID) codes. Staff presented further details and answered questions on the LID code revisions in a City Council Study Session on November 15, 2016.

In order to comply with City's NPDES permit, the City must also review, revise, and make effective local development-related codes to incorporate LID principles that would make them the preferred and commonly-used approach to site development. The revised LID codes accomplishes this requirement provided they are adopted via code amendment by **December 31, 2016.**

Further information on the NPDES Permit can be found at:

http://www.ecy.wa.gov/programs/wq/stormwater/municipal/phaseIIww/wwphiipermit.html

Financial Impact
There is no direct financial impact associated with adoption of the updated SMC LID Codes.

Recommended Actions
Conduct a Public Hearing and first reading of the Low Impact Development Codes Update Ordinance and motion to approve the Ordinance adopting the same on December 6, 2016.

Exhibit 1

CITY OF SAMMAMISH
WASHINGTON

ORDINANCE NO. O2016 -___

AN ORDINANCE OF THE CITY OF SAMMAMISH, WASHINGTON, RELATING TO LOW IMPACT DEVELOPMENT IN THE CITY; AMENDING CHAPTER 21A.85 AND SECTIONS 16.15.020, 21A.15.112, 21A.15.625, 21A.15.731, 21A.25.030, 21A.15.190, 21A.30.030 21A.30.140; 21A.35.055, 21A.35.060, 21A.35.070; 21A.40.120, 21B.15.080, 21B.15.230, 21B.15.310, 21B.25.040; 21B.30.040, 21B.30.050, 21B.30.070, 21B.30.160, 21B.30.170, 21B.35.220, 21B.85.030 AND 21B.85.040 OF THE SAMMAMISH MUNICIPAL CODE; PROVIDING FOR SEVERABILITY; AND ESTABLISHING AN EFFECTIVE DATE

WHEREAS, the Federal Clean Water Act requires that states assess water quality status within the state, and the Washington State Department of Ecology ("Ecology") accordingly maintains a list of waters for which beneficial uses—such as drinking, recreation, aquatic habitat and industrial uses—are impaired by pollution (the "303(d) List"); and

WHEREAS, Ecology estimates that approximately one-third of polluted waters on the 303(d) List are degraded because of stormwater runoff; and

WHEREAS, the City of Sammamish ("City") is home to three lakes on the 303(d) List, as well as other environmentally sensitive areas such as wetlands, streams and creeks; and

WHEREAS, the City is also home to spawning creeks for kokanee salmon, which have been petitioned to become a threatened species under the U.S. Endangered Species Act, and scientists have cited loss of habitat due to development and stormwater runoff as factors that have contributed to declining salmon populations; and

WHEREAS, state and local storm management tools, including low impact development (LID) regulations, can help address pollution and other critical environmental issues in Puget Sound cities; and

WHEREAS, comprehensive application of LID practices is necessary to reduce the hydrologic changes and pollutant loads to surface and ground waters; and

WHEREAS, the City's National Pollutant Discharge Elimination System (NPDES) Phase II Permit issued by Ecology requires that the City review its LID regulations to ensure compliance with the permit conditions; and

WHEREAS, in compliance with the City's NPDES Phase II Permit, the City has adopted the 2016 King County Surface Water Design Manual, and the Sammamish Addendum thereto, which include LID requirements for development projects within the City; and

WHEREAS, City staff have identified amendments to the City Code which are necessary to ensure the City's development regulations are consistent with both the NPDES permit requirements and the recently adopted Surface Water Design Manual (the "Proposed LID Amendments"); and

WHEREAS, on October 27, 2016, a copy of the Proposed LID Amendments was transmitted to the Washington State Department of Commerce ("Commerce") in accordance with RCW 36.70A.106, and Commerce granted expedited review on November 7, 2016; and

WHEREAS, on November 9, 2016, a Determination of Non-Significance was issued for the Proposed LID Amendments in accordance with the State Environmental Policy Act (Chapter 43.21C RCW) and sent to required state agencies and interested parties; and

WHEREAS, the public process for the proposed amendments has provided for continuous public participation and at open houses and stakeholder meetings from July through December 2016; and

WHEREAS, on September 15, 2016, the Planning Commission held a public hearing to receive public testimony regarding the Proposed LID Amendments; and

WHEREAS, the Planning Commission considered the Proposed LID Amendments and a regular meeting thereof on October 27, 2016, and recommended adoption of the same; and

WHEREAS, the City Council held a public hearing on the Proposed LID Amendments on December 6, 2016 and December 13, 2016, and has considered all public comment and the Planning Commission recommendation regarding the Proposed LID Amendments; and

NOW, THEREFORE, THE CITY COUNCIL OF THE CITY OF SAMMAMISH, WASHINGTON, DO ORDAIN AS FOLLOWS:

Section 1. SMC 16.15.020, Definitions, Amended. Sammamish Municipal Code Section 16.15.020, "Definitions," is hereby amended to read as set forth in **Attachment A**, which is incorporated herein by this reference.

Section 2. Amendments to Chapter 21A.15 SMC, Technical Terms and Land Use Definitions,. The following sections of Sammamish Municipal Code Chapter 21A.15, "Technical Terms and Land Use Definitions," are hereby amended to read as set forth in **Attachment B**, which is incorporated herein by this reference:

SMC 21A.15.112	Bioretention
SMC 21A.15.625	Impervious surface
SMC 21A.15.731	Low impact development

Section 3. Amendments to Chapter 21A.25 SMC, Development Standards - Density and Dimensions. The following sections of Sammamish Municipal Code Chapter 21A.25, "Development Standards - Density and Dimensions," are hereby amended to read as set forth in **Attachment C**, which is incorporated herein by this reference:

SMC 21A.25.030	Densities and dimensions - Residential zones
SMC 21A.25.190	Setbacks - Projections and structures allowed

Section 4. Amendments to Chapter 21A.30 SMC, Development Standards - Design Requirements. The following sections of Sammamish Municipal Code Chapter 21A.30, "Development Standards - Design Requirements," are hereby amended to read as set forth in **Attachment D**, which is incorporated herein by this reference:

SMC 21A.30.030	Lot segregations - Clustered development
SMC 21A.30.140	On-site recreation - Space required

Section 5. Amendments to Chapter 21A.35 SMC, Development Standards - Landscaping and Irrigation. The following sections of Sammamish Municipal Code Chapter 21A.35, "Development Standards - Landscaping and Irrigation," are hereby amended to read as set forth in **Attachment E**, which is incorporated herein by this reference:

SMC 21A.35.055	Landscaping - Drainage facilities
SMC 21A.35.060	Landscaping - Surface parking areas
SMC 21A.35.070	Landscaping - General standards for all landscape areas

Section 6. SMC 21A.40.120, Off-street Parking Construction Standards, Amended. Sammamish Municipal Code Section 21A.40.120, "Off-street parking construction standards," is hereby amended to read as set forth in **Attachment F**, which is incorporated herein by this reference.

Section 7. Chapter 21A.85 SMC, Low Impact Development, Amended. Chapter 21A.85 SMC, "Low Impact Development," is hereby amended to read as set forth in **Attachment G**, which is incorporated herein by this reference.

Section 8. Amendments to Chapter 21B.15 SMC, Technical Terms and Land Use Definitions. The following sections of Sammamish Municipal Code Chapter 21B.15, "Technical Terms and Land Use Definitions," are hereby amended to read as set forth in **Attachment H**, which is incorporated herein by this reference:

SMC 21B.15.080	Clustered development
SMC 21B.15.230	Low impact development
SMC 21B.15.310	Rain garden

Section 9. SMC 21B.25.040, Provisions to Obtain Additional (Bonus) Residential Density or Commercial Development Capacity, Amended. Sammamish Municipal Code Section 21B.25.040, "Provisions to obtain additional (bonus) residential density or commercial development

capacity," is hereby amended to read as set forth in **Attachment I**, which is incorporated herein by this reference.

Section 10. Amendments to Chapter 21B.30 SMC, Development Standards - Design Requirements. The following sections of Sammamish Municipal Code Chapter 21B.30, "Development Standards - Design Requirements," are hereby amended to read as set forth in **Attachment J**, which is incorporated herein by this reference:

SMC 21B.30.040	Site planning - Street layout
SMC 21B.30.050	Site planning - Multiple building/large
SMC 21B.30.070	Site planning - Internal vehicular circulation
SMC 21B.30.160	Site design elements - Open space design
SMC 21B.30.170	Site design elements - Trail corridors

Section 11. SMC 21B.35.220, Tree Replacement and Enforcement, Amended. Sammamish Municipal Code Section 21B.35.220, "Tree replacement and enforcement," is hereby amended to read as set forth in **Attachment K**, which is incorporated herein by this reference.

Section 12. Amendments to Chapter SMC 21B.85, Interim Stormwater Standards. The following sections of Sammamish Municipal Code Chapter 21B.85, "Interim Stormwater Standards," are hereby amended to read as set forth in **Attachment L**, which is incorporated herein by this reference:

SMC 21B.85.030	Town Center stormwater standards adopted
SMC 21B.85.040	Review and Appeal

Section 13. Interpretation. The City Council authorizes the applicable director to administratively interpret these provisions as necessary to implement the intent of the City Council.

Section 14. Severability. Should any section, paragraph, sentence, clause or phrase of this ordinance, or its application to any person or circumstance, be declared unconstitutional or otherwise invalid for any reason, or should any portion of this ordinance be preempted by state or federal law or regulation, such decision or preemption shall not affect the validity of the remaining portions of this ordinance or its application to other persons or circumstances.

Section 15. Effective Date. This ordinance shall be published in the official newspaper of the City, and shall take effect and be in full force on January 1, 2017.

ADOPTED BY THE CITY COUNCIL AT A REGULAR MEETING THEREOF ON THE ____ DAY OF_____, 2016.

CITY OF SAMMAMISH

_____
Donald J. Gerend, Mayor

ATTEST/AUTHENTICATED:

_____
Melonie Anderson, City Clerk

Approved as to form:

_____
Michael R. Kenyon, City Attorney

Filed with the City Clerk:	
Public Hearing:	September 15, 2016
First Reading:	December 6, 2016
Public Hearing:	December, 6, 2016
Public Hearing:	December 13, 2016
Passed by the City Council:	
Date of Publication:	
Effective Date:	January 1, 2017

Exhibit 1

Attachment A

Attachment A

Chapter 16.15

CLEARING AND GRADING

Sections:
[…]
16.15.020 Definitions.
[…]

[…]

16.15.020 Definitions.
Certain words and phrases used in this chapter, unless otherwise clearly indicated by their context, mean as follows:

(1) "Applicant" is a property owner or a public agency or public or private utility that owns a right-of-way or other easement or has been adjudicated the right to such an easement pursuant to RCW 8.12.090, or any person or entity designated or named in writing by the property or easement owner to be the applicant, in an application for a development proposal, permit, or approval.

(2) "Bench" is a relatively level step excavated or constructed on the face of a graded slope surface for drainage and maintenance purposes.

(3) "Berm" is a mound or raised area used for the purpose of screening a site or operation.

(4) "Civil engineer" means a professional engineer registered in the state of Washington to practice in the field of civil works.

(5) "Clearing" means the cutting or removal of vegetation or other organic plant material by physical, mechanical, chemical, or any other means.

(6) "Compaction" is the densification, settlement or parking of soil in such a way that permeability of the soil is reduced. Compaction may also refer to the densification of a fill by mechanical means.

(7) "Cutting" is the severing of the main trunk or stems from close to or at the soil surface or at a point up to 25 percent of the total vegetation height.

(8) "Director" means the director of the department of community development.

(9) "DBH" means the diameter of a tree as measured from breast height (54 inches above the ground).

(10) "Earth material" is any rock, natural soil, or any combination thereof.

(11) "Erosion" is the wearing away of the ground surface as the result of the movement of wind, water and/or ice.

(12) “Excavation” is the removal of earth material.

(13) “Fill” is a deposit of earth material placed by mechanical means.

(14) “Grade” means the elevation of the ground surface.

(a) “Existing grade” is the grade prior to grading.

(b) “Rough grade” is the stage at which the grade approximately conforms to the approved plan as required in SMC 16.15.070.

(c) “Finish grade” is the final grade of the site that conforms to the approved plan as required in SMC 16.15.070.

(15) “Grading” is any excavating, filling, removing of the duff layer, or combination thereof.

(16) “Grading and clearing permit” means the permit required by this chapter for grading and clearing activities, including temporary permits.

(17) “Pruning” means cutting or removal of branches and leaving at least two-thirds of the existing tree branch structure. Topping and removal of more than one-third of the existing limbs shall only be permitted under the supervision of a certified arborist.

(18) “Reclamation” means the final grading and land restoration of a site.

(19) “Shorelines” means those lands defined as shorelines in the State Shorelines Management Act of 1971.

(20) “Site” is any lot or parcel of land or contiguous combination thereof where projects covered by this chapter are performed or permitted where a public street or way may intervene.

(21) “Slope” is an inclined ground surface, the inclination of which is expressed as a ratio of vertical distance to horizontal distance.

(22) “Soil engineer” means a person who has earned a degree in geology from an accredited college or university, or a person who has equivalent educational training and has experience as a practicing geologist.

(23) “Structure” is that which is built or constructed, an edifice or building of any kind, or any piece of work artificially built up or composed of parts jointed together in some definite manner.

(24) “Terrace” is a relatively level step excavated or constructed on the face of a graded slope surface for drainage and maintenance purposes.

(25) “Tidelands” means that portion of the land that is covered and uncovered by the ebb and flood tide.

(26) “Tree” is a large woody perennial plant usually with a single main stem or trunk and generally over 25 feet tall at maturity.

(27) “Understory” is the vegetation layer of a forest that includes shrubs, herbs, grasses, and grass-like plants, but excludes native trees.

(28) “Vegetation” means any and all organic plant life growing at, below, or above the soil surface. (Ord. O2005-193 § 2, 2005; Ord. O2004-149 § 1; Ord. O2003-132 § 2)

Attachment B

CHAPTER 21A.15

TECHNICAL TERMS AND LAND USE DEFINITIONS

Sections:
[…]
21A.15.112 Bioretention.
[…]
21A.15.625 Impervious surface.
[…]
21A.15.731 Low impact development.
[…]

[…]

21A.15.112 Bioretention.
"Bioretention" means a ~~stormwater~~flow control best management practice consisting of a shallow landscaped depression designed to temporarily store and promote infiltration of stormwater runoff. Standards for bioretention design, including soil mix, plants, storage volume and feasibility criteria, are specified in Appendix C of the King County Surface Water Design Manual.~~excavated or otherwise formed depressions in the landscape that provide for storage, treatment, and infiltration of stormwater runoff~~. ~~(Ord. O2008-236 § 1)~~

[…]

21A.15.625 Impervious surface.
"Impervious surface," for purposes of this title, means a hard surface area that either prevents or retards the entry of water into the soil mantle as under natural conditions before development; or that causes water to run off the surface in greater quantities or at an increased rate of flow compared to the flow present under natural conditions prior to development .~~means any nonvertical surface artificially covered or hardened so as to prevent or impede the percolation of water into the soil mantle at natural infiltration rates. Common impervious surfaces include,including, but are not limited to, roofs, swimming pools, and areas that are paved, graveled or made of packed or oiled earthen materials such as roads, walkways, or parking areas and excluding landscaping, surface water flow control, and water quality treatment facilities, access easements serving neighboring property and driveways to the extent that they extend beyond the street setback due to location within an access panhandle or due to the application of requirements to site features over which the applicant has no control. (Ord. O2003-132 § 10)~~

[…]

21A.15.731 Low impact development.
"Low impact development" (LID) is a stormwater and land ~~development~~ use management strategy that strives to mimic pre-disturbance hydrological processes of infiltration, filtration, storage, evaporation and transpiration by emphasizing conservation, use of on-site natural features, site planning, and

distributed stormwater management practices that are integrated into a project design. ~~applied at the parcel and subdivision scale that emphasizes minimizing soil disturbance, conserving on-site natural features, site planning, adding vegetation, using pervious surfaces, minimizing impervious surfaces, and integrating all of these elements with engineered, small-scale hydrologic controls in order to mimic pre-development hydrologic functions. (Ord. O2008-236 § 1)~~

Attachment C

Chapter 21A.25

DEVELOPMENT STANDARDS – DENSITY AND DIMENSIONS

Sections:
[…]
21A.25.030 Densities and dimensions – Residential zones.
21A.25.040 Densities and dimensions – Commercial zones.
[…]
21A.25.190 Setbacks – Projections and structures allowed.
[…]

[…]

21A.25.030 Densities and dimensions – Residential zones.
A. Residential Zones.

	ZONES	**RESIDENTIAL**					
		URBAN RESIDENTIAL					
STANDARDS		**R-1(13)**	**R-4**	**R-6**	**R-8**	**R-12**	**R-18**
Maximum Density DU/Acre (11)		1 du/ac	4 du/ac (5)	6 du/ac	8 du/ac	12 du/ac	18 du/ac
Minimum Density (2)					85% (14)	80% (14)	75% (14)
Minimum Lot Width		35 ft (7)	30 ft	30 ft	30 ft	30 ft	30 ft
Minimum Street Setback		20 ft (6)	10 ft (7) (16)	10 ft (7) (16)	10 ft (7) (8)	10 ft (7)	10 ft (7)
Minimum Interior Setback (2)(12)		5 ft (7)	5 / 7 / 15 ft (17)	5 / 7 / 15 ft (17)	5 ft	5 ft	5 ft
Base Height (3)(15)		35 ft	35 ft	35 ft 45 ft (10)	35 ft 45 ft (10)	60 ft	60 ft 80 ft (10)
Maximum Impervious Surface: Percentage (4)		30% (9)			75%	85%	85%
Minimum Yard Area (18)			45%	35%			
Lot Coverage (19)			40%	50%			

1. Also see SMC 21A.25.060.

2. These standards may be modified under the provisions for zero lot line and townhouse developments.

3. Height limits may be increased when portions of the structure which exceed the base height limit provide one additional foot of street and interior setback for each foot above the base height limit, provided the maximum height may not exceed 75 feet. Netting or fencing and support structures for the netting or fencing used to contain golf balls in the operation of golf courses or golf driving ranges are exempt from the additional interior setback requirements; provided, that the maximum height shall not exceed 75 feet.

4. Applies to each individual lot. Impervious surface area standards for:

a. Regional uses shall be established at the time of permit review;

b. Nonresidential uses in residential zones shall comply with SMC 21A.25.130;

c. Lot may be increased beyond the total amount permitted in this chapter subject to approval of a conditional use permit.

5. Mobile home parks shall be allowed a base density of six dwelling units per acre.

6. The standards of the R-4 zone shall apply if a lot is less than 15,000 square feet in area.

7. At least 20 linear feet of driveway shall be provided between any garage, carport or other fenced parking area and the street property line. The linear distance shall be measured along the center line of the driveway from the access point to such garage, carport or fenced area to the street property line.

8. a. For developments consisting of three or more single-detached dwellings located on a single parcel, the setback shall be 10 feet along any property line abutting R-1 through R-8, except for structures in on-site play areas required in SMC 21A.30.160, which shall have a setback of five feet.

b. For townhouse and apartment development, the setback shall be 20 feet along any property line abutting R-1 through R-8, except for structures in on-site play areas required in SMC 21A.30.160, which shall have a setback of five feet, unless the townhouse or apartment development is adjacent to property upon which an existing townhouse or apartment development is located.

9. Lots smaller than one-half acre in area shall comply with standards of the nearest comparable R-4 through R-8 zone. For lots that are one-half acre in area or larger, the impervious surface area allowed shall be 10,000 square feet or 30 percent of the property, whichever is greater. On any lot over one acre in area, an additional five percent of the lot area may be used for buildings related to agricultural or forestry practices. For lots smaller than two acres but larger than one-half acre, an additional 10 percent of the lot area may be used for structures which are determined to be medically necessary, provided the applicant submits with the permit application a notarized affidavit, conforming with the requirements of SMC 21A.70.170(1)(b). Public projects shall be subject to the applicable impervious surface provisions of the R-4 zone.

10. The base height to be used only for projects as follows:

a. In R-6 and R-8 zones, a building with a footprint built on slopes exceeding a 15 percent finished grade; and

b. In the R-18 zone using residential density incentives and transfer of density credits pursuant to this title.

11. Density applies only to dwelling units and not to sleeping units.

12. Vehicle access points from garages, carports or fenced parking areas shall be set back from the property line on which a joint use driveway is located to provide a straight line length of at least 26 feet as measured from the center line of the garage, carport or fenced parking area, from the access point to the opposite side of the joint use driveway.

13. All subdivisions and short subdivisions in the R-1 zone shall be required to be clustered away from critical areas or the axis of designated corridors such as urban separators or the wildlife habitat network to the extent possible and a permanent open space tract that includes at least 50 percent of the site shall be created. Open space tracts shall meet the provisions of SMC 21A.30.030.

14. See SMC 21A.25.090.

15. Subject to the increase in maximum height permitted pursuant to SMC 21A.85~~.070~~, ~~preferred~~ low impact development incentives, and SMC 21A.30.020.

16. Thirty percent of the area contained within the street setback shall be landscaped. ~~and~~ This part of the street setback area may be used to comply with the minimum ~~pervious~~ yard ~~surface~~ area percentage.

17. Lots with three or more interior lot lines shall provide a combination of five-foot, seven-foot, and 15-foot interior setbacks. Lots with two interior lot lines shall provide a combination of two interior setback widths. For example, a lot with two interior lot lines could provide a five-foot and a seven-foot interior setback from interior lot lines.

18. For the purposes of this section, “yard” is any surface area that is not structured or hardened. Yard areas may be landscaped, contain uncovered decks of less than 18 inches above grade, and artificial turf, but do not include areas covered by pervious concrete or other similar materials.

19. The maximum lot coverage may be increased by five percentile points once, if a covered outdoor living space or an accessory dwelling unit is built on site. For the purposes of this section, a covered outdoor living space includes any structure with a roof that is not fully enclosed by walls. (Ord. O2016-407 § 1 (Att. A); Ord. O2010-279 § 1 (Att. A); Ord. O2009-249 § 1; Ord. O2008-236 § 1; Ord. O2004-143 § 1; Ord. O2003-132 § 12)

21A.25.040 Densities and dimensions – Commercial zones.
A. Commercial Zones.

	ZONES	COMMERCIAL		
		NEIGHBORHOOD BUSINESS	COMMUNITY BUSINESS	OFFICE
STANDARDS		**NB**	**CB**	**O**
Maximum Density DU/Acre		8 du/ac (1)	18 du/ac (1)	18 du/ac (1)
Minimum Lot Area				
Maximum Lot Depth/Width Ratio			10 ft	10 ft
Minimum Street Setback		10 ft (2)	10 ft (2)	10 ft
Minimum Interior Setback (4)		20 ft (5)	20 ft (5)	20 ft (5)
Base Height (7)		35 ft 45 ft (3)	35 ft 60 ft (3)	45 ft 60 ft (3)
Maximum Floor/Lot Ratio: Square Feet		1/1 (6)	1.5/1 (6)	2.5/1 (6)
Maximum Impervious Surface: Percentage (8)(9)		85%	85%	75%

B. Development Conditions.

1. These densities are allowed only through the application of mixed use development standards and for stand-alone townhouse development in the NB zone on property designated commercial outside of center in the urban area.

2. Gas station pump islands shall be placed no closer than 25 feet to street front lines.

3. This base height allowed only for mixed use developments and for stand-alone townhouse development in the NB zone on property designated commercial outside of center in the urban area.

4. Required on property lines adjoining residential zones.

5. Required on property lines adjoining residential zones for industrial uses established by conditional use permits.

6. The floor/lot ratio for mixed use developments shall conform to Chapter 21A.30 SMC.

7. Height limits may be increased when portions of the structure or building which exceed the base height limit provide one additional foot of street and interior setback for each foot above the base height limit, provided the maximum height may exceed 75 feet only in mixed use developments. Netting or fencing and support structures for the netting or fencing used to contain golf balls in the operation of

golf courses or golf driving ranges are exempt from the additional interior setback requirement; provided, that the maximum height shall not exceed 75 feet.

8. The impervious surface area for any lot may be increased beyond the total amount permitted in this chapter subject to approval of a conditional use permit.

9. Subject to the increase in maximum height permitted pursuant to SMC 21A.30.020 and 21A.85.070, preferred low impact development incentives. (Ord. O2009-249 § 1; Ord. O2008-236 § 1; Ord. O2003-132 § 12)

[…]

21A.25.190 Setbacks – Projections and structures allowed.
Provided that the required setbacks from regional utility corridors of SMC 21A.25.160, as allowed in the environmentally critical areas of SMC 21A.50.210, the adjoining half-street or designated arterial setbacks of SMC 21A.25.180 and the sight distance requirements of SMC 21A.25.220 are maintained, structures may extend into or be located in required setbacks, as follows:

(1) Fireplace structures, bay or garden windows, enclosed stair landings, closets, or similar structures may project 30 inches into a street setback and 18 inches into an interior setback, provided such projections are:

(a) Limited to two per facade; and

(b) Not wider than 10 feet;

(2) Uncovered porches and decks that exceed 18 inches above the finished grade may project five feet into the street setback;

(3) Uncovered porches and decks not exceeding 18 inches above the finished grade may project to the street property line;

(4) Eaves may not project more than:

(a) Twenty-four inches into a street setback; or

(b) Eighteen inches across a lot line in a zero lot line development, provided there are appropriate easements and that any neighboring building and its associated eaves are 10 feet from the lot line; or

(c) Eighteen inches into an interior setback;

(5) Fences with a height of six feet or less may project into or be located in any setback;

(6) Rockeries, retaining walls and curbs may project into or be located in any setback provided these structures:

(a) Do not exceed a height of six feet in the R-1 through R-18 zones; and

(b) Do not exceed the building height for the zone in commercial zones, measured in accordance with the standards established in the International Building Code, SMC Title 16;

(c) Are in accordance with the requirements in Chapter 21A.50 SMC, Environmentally Critical Areas;

(7) Fences located on top of rockeries, retaining walls or berms are subject to the requirements of SMC 21A.30.190;

(8) Telephone poles and lines; power poles and lines; cable TV and Internet lines; light and flagpoles; trellises not exceeding eight feet in height, not wider than 10 feet; culverts; underground water facilities; underground sewer facilities; and accessory facilities for the provision of utilities, such as drains, but excluding electrical and cellular equipment cabinets, and similar utility boxes and vaults;

(9) The following may project into or be located within a setback, but may only project into or be located within an interior setback area if an agreement documenting consent between the owners of record of the abutting properties is recorded with the King County department of records and elections prior to the installment or construction of the structure:

(a) Sprinkler systems, heat pumps, air conditioning units, electrical and cellular equipment cabinets and other similar utility boxes and vaults;

(b) Security system access controls;

(c) Structures, except for buildings, associated with trails and on-site recreation spaces and play areas required in SMC 21A.30.140 and 21A.30.160 such as benches, picnic tables and drinking fountains; and

(d) Surface water management facilities as required by Chapter 9.04 KCC as adopted by Chapter 15.05 SMC;

(10) Mailboxes and newspaper boxes may project into or be located within street setbacks;

(11) Fire hydrants and associated appendages;

(12) Metro bus shelters may be located within street setbacks;

(13) Unless otherwise allowed in SMC 21A.45.080, freestanding and monument signs four feet or less in height, with a maximum sign area of 20 square feet may project into or be located within street setbacks; and

(14) Storm water vaults, structures, and conveyance systems ~~and control facilities~~, both above and below ground, provided such projections are:

(a) Consistent with setback, easement and access requirements specified in the current ~~s~~Surface ~~w~~Water ~~d~~Design ~~m~~Manual; or

(b) In the absence of said specifications, not within ~~five~~ ten feet of the property line for stormwater vaults and structures, and not within five feet of the property line for conveyance systems~~.~~

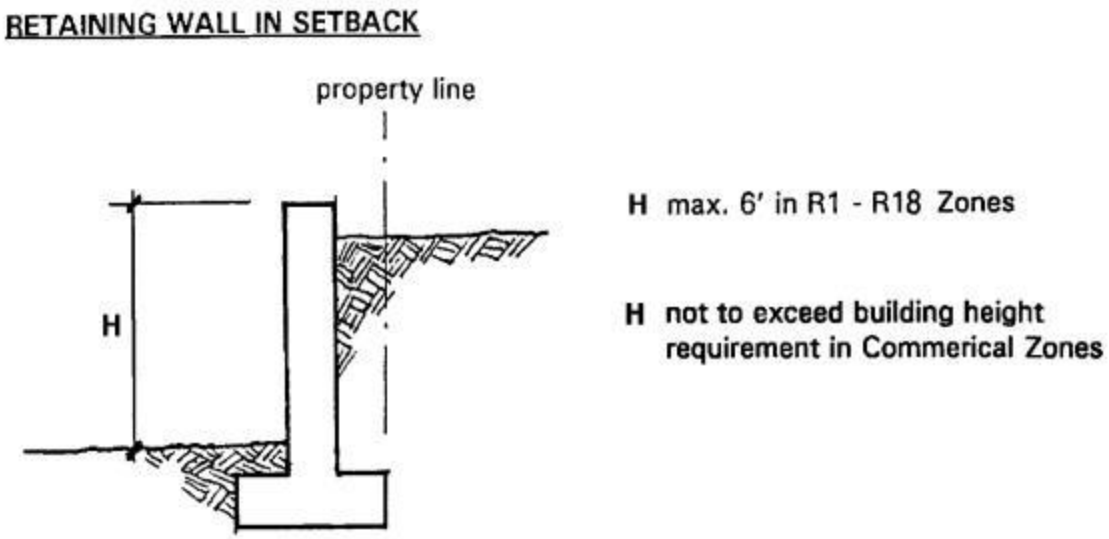

(Ord. O2009-249 § 1; Ord. O2005-171 §§ 3, 4; Ord. O2004-143 § 1; Ord. O2003-132 § 12)

[…]

Attachment D

Chapter 21A.30

DEVELOPMENT STANDARDS – DESIGN REQUIREMENTS

Sections:
[…]
21A.30.030 Lot segregations – Clustered development.
[…]
21A.30.140 On-site recreation – Space required.
[…]

[…]

21A.30.030 Lot segregations – Clustered development.
When residential lot clustering is proposed, the following provisions shall be met:

(1) Any open space resulting from lot clustering should be located where existing stands of native vegetation exist and shall not be altered or disturbed except as specified on recorded documents creating the open space. Such open spaces may be retained under ownership by the subdivider, conveyed to residents of the development, or conveyed to a third party. When access to the open space is provided, the access shall be located in a separate tract; and

(2) In the R-1 zone, open space tracts created by clustering required by SMC 21A.25.030 shall be located and configured to create urban separators and greenbelts as required by the interim comprehensive plan, to connect and increase protective buffers for environmentally sensitive areas as defined in SMC 21A.15.1065, to connect and protect wildlife habitat corridors designated by the interim comprehensive plan, and to connect existing or planned public parks or trails. The City may require open space tracts created under this subsection to be dedicated to the City, an appropriate managing public agency, or qualifying private entity such as a nature conservancy. (Ord. O99-29 § 1)

[…]

21A.30.140 On-site recreation – Space required.
(1) All single-family, multifamily and townhouse developments of more than four units, and mixed use developments of more than four units, shall provide recreation space excluding environmentally sensitive areas as defined by Chapter 21A.50 SMC for leisure, play or sport activities as follows:

(a) Residential developments at a density of eight units or less per acre: 390 square feet per unit;

(b) Attached residential developments at a density of greater than eight units per acre, and mixed use:

(i) Studio and one bedroom: 90 square feet per unit;

(ii) Two bedroom: 130 square feet per unit; and

(iii) Three or more bedroom: 170 square feet per unit.

(2) Any recreation space located outdoors shall:

(a) Be of a grade and surface suitable for recreation;

(b) Be on the site of the proposed development;

(c) Have no dimensions less than 20 feet (except trail segments);

(d) When the required open space is less than 5,000 square feet, the required open space shall be located in a single area or tract;

(e) When the required open space exceeds 5,000 square feet:

(i) The space shall have a street roadway or parking area frontage along 10 percent or more of the recreation space perimeter (except trail segments);

(ii) A minimum of 60 percent of the required open space shall be located in a single area or tract;

(iii) At least one area or tract shall contain a minimum of 5,000 square feet;

(f) Be accessible and convenient to all residents within the development; and

(g) Be accessible by trail or walkway to any existing or planned community park, public open space or trail system, which may be located on adjoining property.

(3) Indoor recreation areas may be credited towards the total recreation space requirement, when the City determines that such areas are located, designed and improved in a manner that provides recreational opportunities functionally equivalent to those recreational opportunities available outdoors. For senior citizen assisted housing, indoor recreation areas need not be functionally equivalent but may include social areas, game and craft rooms, and other multi-purpose entertainment and education areas.

(4) Storm water runoff tracts may be credited for up to ~~50~~ 100 percent of the on-site recreation space requirement, subject to the following criteria, which are intended to create ponds that are more natural in shape and appearance; provide opportunities for passive or active recreation, wildlife viewing and educational opportunities; or to create more visual interest:

(a) The storm water runoff tract is dedicated or reserved as a part of a recreation space tract;

(b) To earn a 50% credit towards the on-site recreation space requirement, the detention pond shall be constructed to meet the following conditions:

(i) Side slopes shall not exceed 33 percent unless they are existing, natural, or covered with vegetation and meet the design criteria in the Surface Water Design Manual for side slopes.

(ii) A bypass system or an emergency overflow pathway shall be designed to handle flow exceeding the facility design and located so that it does not pass through active recreation areas or present a safety hazard.

a. (iii) The area surrounding the stormwater pond above the live storage shall be landscaped in a manner to enhance passive recreational opportunities such as , including a trail or pathway around the pond perimeter.

(ivThe stormwater pond shall be designed so that it does not require fencing per the fencing requirements in Chapter 5 of 2016 KCSWDM (page 5-6).

(iv) Split rail fencing (3 ft. minimum height) is required around the pond at the emergency overflow elevation of the pond or higher. Wire mesh backing of the fence is encouraged, but not required.

(c) To receive a 100% credit, the stormwater pond must meet all the additional requirements in criteria (b) above, and provide twothree or more of the following amenities;

(i) Provide seating using walls, benches and/or tables and chairs that view the stormwater system.

(ii) Create overlook or destination points with views of the stormwater pondsystem.

(iii) Provide vertical planes (using stairs, platforms, etc.) that allow stormwater to be interacted with and viewed from different levels.

(iv) Provide interpretive signage describing the stormwater feature, or the landscape features (such as highlighting the pollinator benefits of plantings incorporated into the stormwater tract).

(v) Stack horizontal and vertical planes to create features such as pools and waterfalls.

(vi) Provide a fountain feature near the pond center.

(vii) Provide at least one fitness station located near the pond accessible via a trail or pathway.

(cd) In the case of joint use of the tract for storm water facilities and recreation space, the City shall be responsible for maintenance of the storm water facilities only and will require an access easement for that purpose. (Ord. O2004-154 § 1; Ord. O99-29 § 1)

[…]

Attachment E

Chapter 21A.35

DEVELOPMENT STANDARDS – LANDSCAPING AND IRRIGATION

Sections:
[…]
21A.35.055 Landscaping – Drainage facilities.
21A.35.060 Landscaping – Surface parking areas.
21A.35.070 Landscaping – General standards for all landscape areas.
[…]

[…]

21A.35.055 Landscaping – Drainage facilities.
The ~~optional~~ landscaping requirements established for detention facilities in the Sammamish Addendum to the King County Surface Water Design Manual~~, Section 5.3.1,~~ are hereby adopted by reference and shall be mandatory for all drainage facilities not located entirely underground. The department shall review and approve proposed landscaping plans subject to the following:

(1) Revisions to plans or additional landscaping requirements may be required to ensure that the proposed landscaping provides an effective screen and an enhancement to the overall appearance of the facility.

(2) Trails or walkways ~~may~~ shall be incorporated into the landscaping plan.

(3) Ten feet of Type I landscaping consisting of 100 percent evergreen trees and shrubs shall be required for that portion of the perimeter of detention facilities where the slope of the detention ~~facilities~~ facility exceeds 3H:1V.~~directly abut public right-of-way, public access or can be seen from a public or private street or does not abut designated open space or environmentally sensitive areas.~~ (Ord. O2005-175 § 1; Ord. O2004-155 § 1)

21A.35.060 Landscaping – Surface parking areas.
Parking area landscaping shall be provided within surface parking areas with 10 or more parking stalls for the purpose of providing shade and diminishing the visual impacts of large paved areas as follows:

(1) Residential developments with common parking areas shall provide planting areas at the rate of 20 square feet per parking stall;

(2) Commercial, industrial, or institutional developments shall provide landscaping at a rate of:

(a) Twenty square feet per parking stall when 10 to 30 parking stalls are provided; and

(b) Twenty-five square feet per parking stall when 31 or more parking stalls are provided;

(3) Trees shall be provided and distributed throughout the parking area at a rate of:

(a) One tree for every five parking stalls for a commercial or industrial development; and

(b) One tree for every 10 parking stalls for residential or institutional development;

(4) The maximum distance between any parking stall and landscaping shall be no more than 100 feet;

(5) Permanent curbs or structural barriers shall be provided to protect the plantings from vehicle overhang; and

(6) Parking area landscaping shall consist of:

(a) Canopy-type deciduous trees, evergreen trees, evergreen shrubs and groundcovers planted in islands or strips;

(b) Shrubs that do not exceed a maintained height of 42 inches;

(c) Plantings contained in planting islands or strips having an area of at least 100 square feet and with a narrow dimension of no less than five feet;

(d) Groundcover pursuant to SMC 21A.35.080; ~~and~~

(e) At least 70 percent of trees are deciduous~~.~~;

(f) Vegetated areas within parking area landscaping that function as bioretention for the treatment of stormwater runoff may differ from the standards in (a) through (e) of this section provided they consist of the following:

(i) Trees, shrubs, perennials and groundcovers tolerant of summer drought, ponding fluctuations and saturated soil conditions for prolonged lengths of time anticipated by the facility design and hydrologic conditions.

(ii) Plants should be tolerant of typical pollutants from surrounding surfaces, such as petroleum hydrocarbons, dissolved metals, and fertilizers.

(iii) Plantings should consist of native plant types; at least 15 percent of the plant palette shall be evergreen. Planting and grading for drainage features should be designed to be integrated aesthetically with the surrounding landscape and urban design elements.

(iv) Visual buffering, sight distances and setbacks should be considered for landscaping adjacent to roadways.

(v) The planting and bioretention soil media shall consist of a bioretention soil mix in accordance with the January 2009 WSU Pierce County Extension "Bioretention Soil Mix Review and Recommendations for Western Washington," or equivalent.

(vi) No plants that are included ~~i~~on the King County noxious weed list. (Ord. O99-29 § 1)

21A.35.070 Landscaping – General standards for all landscape areas.
All new landscape areas proposed for a development shall be subject to the following provisions:

(1) Berms shall not exceed a slope of two horizontal feet to one vertical foot (2:1).

(2) All new turf areas, except all-weather, sand-based athletic fields shall:

(a) Be augmented with a two-inch layer of stabilized compost material or a four-inch layer of organic material with a minimum of eight percent organic material cultivated a minimum of six inches deep; or

(b) Have an existing organic content of eight percent or more to a depth of six inches as shown in a soil sample analysis. The soil analysis shall include:

(i) Determination of soil texture, indicating percentage of organic matter;

(ii) An approximated soil infiltration rate (either measured or derived from soil/texture/infiltration rate tables). A range of infiltration rates shall be noted where appropriate; and

(iii) Measure pH value.

(3) Landscape areas, except turf or areas of established groundcover, shall be covered with at least two inches of City-approved mulch to minimize evaporation.

(4) Plants having similar water use characteristics shall be grouped together in distinct hydrozones.

(5) Plant selection shall consider adaptability to climatic, geologic, and topographical conditions of the site. Preservation of existing vegetation ~~is~~ meeting the requirements of this chapter is required where feasible~~encouraged~~. (Ord. O2009-249 § 1; Ord. O99-29 § 1)

Attachment F

Chapter 21A.40

DEVELOPMENT STANDARDS – PARKING AND CIRCULATION

Sections:
[…]
21A.40.120 Off-street parking construction standards.
[…]

[…]

21A.40.120 Off-street parking construction standards.
(1) Off-street parking areas shall have dust-free, all-weather surfacing. Typical approved sections are illustrated below. Frequently used (at least five days a week) off-street parking areas shall conform to the standards shown in A below or an approved equivalent. If the parking area is to be used more than 30 days per year but less than five days a week, then the standards to be used shall conform to the standards shown in B below or an approved equivalent. An exception to these surfacing requirements may be made for certain uses that require intermittent use of their parking facilities less than 30 days per year, and for permeable pavement, when constructed to the design specifications in the Surface Water Design Manual. Any surface treatment other than these exceptions and those graphically illustrated below must be approved by the director.

MINIMUM SURFACING REQUIREMENTS

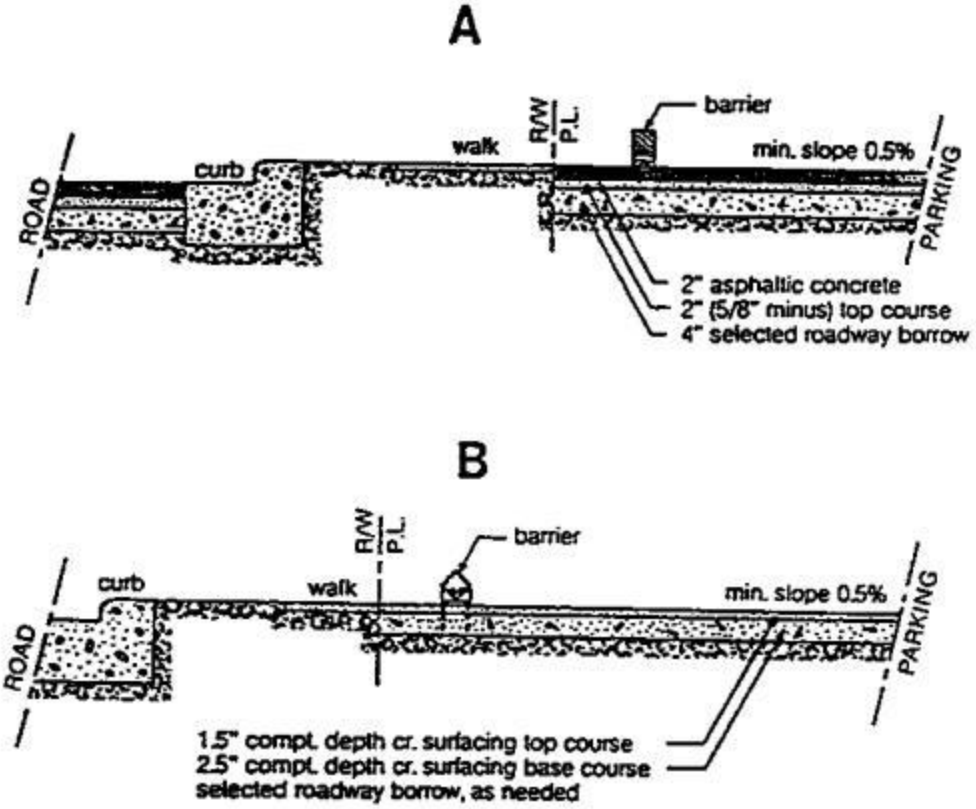

(2) Grading work for parking areas shall meet the requirements of Chapter 16.15 SMC. Drainage and erosion/sedimentation control facilities shall be provided in accordance with Chapter 9.04 KCC as adopted by Chapter 15.05 SMC.

(3) Asphalt or concrete surfaced parking areas shall have parking spaces marked by surface paint lines or suitable substitute traffic marking material in accordance with the Washington State Department of Transportation Standards. Wheel stops are required where a parked vehicle would encroach on adjacent property, pedestrian access or circulation areas, right-of-way or landscaped areas. Typically approved markings and wheel stop locations are illustrated below.

STALL MARKINGS AND WHEEL STOP LOCATIONS

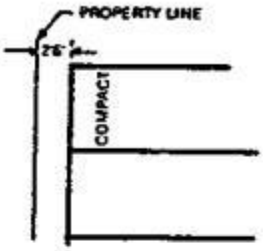

COMPACT MARKING

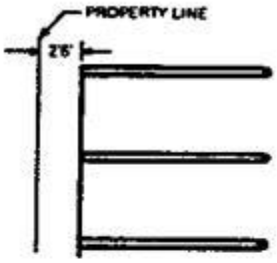

PAINTED HORSESHOE MARKING

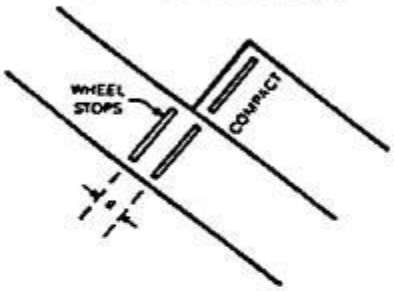

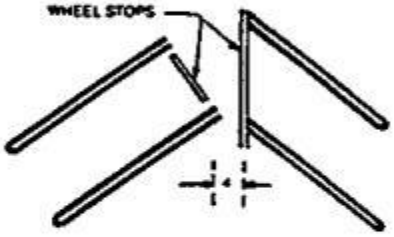

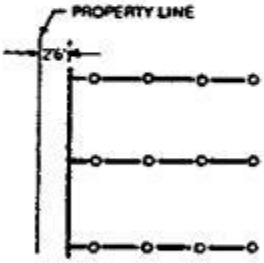

METAL OR PLASTIC TRAFFIC MARKING

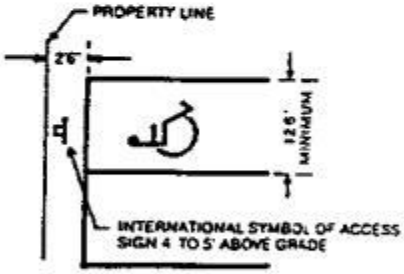

HANDICAP MARKING

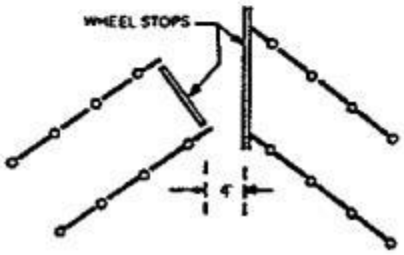

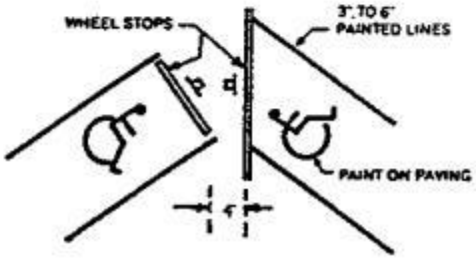

(Ord. O99-29 § 1)

Attachment G

Chapter 21A.85

LOW IMPACT DEVELOPMENT

Sections:
21A.85.010 Intent and goals.
21A.85.020 Applicability.
~~21A.85.030 Sammamish comprehensive low impact development design.~~
21A.85.~~040~~ 030 ~~General l~~Low impact development approaches~~ and standards~~.
~~21A.85.050 Residential preferred LID approaches and standards.~~
~~21A.85.060 Town center LID approaches and standards.~~
21A.85.~~070~~ 040 ~~Preferred~~ LID incentives.
21A.85.~~080~~ 050 Review.

21A.85.010 Intent and goals.
Low impact development (LID) is an approach to land use planning and project design that seeks to:

(1) Increase the ability of a developed site to effectively emulate predevelopment hydrologic conditions, including without limitation, stormwater retention, water quality treatment, and infiltration functions;

(2) Minimize overland stormwater runoff from a developed site;

(3) Maximize the retention of trees, native vegetation, understory plants, and native soils;

(4) Minimize soil disturbance;

(5) Minimize the conversion of site surfaces from vegetated to nonvegetated surfaces; and

(6) Maximize the quantity and use of appropriate native plants on site.

The purpose of this chapter is to encourage development proposals to incorporate LID planning and design approaches into project development by providing incentives tied to LID's use.

This chapter seeks to guide land use planning decisions only and does not replace any federal, state or local stormwater flow control and water quality treatment regulations. ~~While some LID approaches encouraged by this chapter for land use purposes may also be eligible for stormwater credits under applicable stormwater flow control and water quality treatment regulations, some LID approaches designed pursuant to this chapter may not qualify for stormwater credits.~~ Applicants are responsible for ensuring that their project proposal complies with all applicable regulations. (Ord. O2008-236 § 1)

21A.85.020 Applicability.
All new development subject to drainage review shall ~~have~~ be required to comply with the ~~current~~adopted Surface Water Design Manual (SWDM). The SWDM requires Low Impact Development (LID) flow control best management practices (BMPs) to mitigate the impacts of storm and surface water runoff generated by new impervious surfaces, new pervious surfaces, existing impervious surfaces, and replaced impervious surfaces.

In addition to the use of these required BMPs, new development may also have the option to~~:~~

~~(1) Design a project that incorporates LID into all aspects of the development proposal subject to SMC 21A.85.030; or~~

~~(2) I~~incorporate ~~the preferred~~ LID site planning approaches described in SMC 21A.85.~~040~~ 030 ~~through 21A.85.060~~ into project design in order to accumulate sufficient technique points to allow the applicant to take advantage of the incentives identified in SMC 21A.85.04~~7~~0.

The City of Sammamish shall apply this chapter to all City projects and encourage other governmental entities to utilize LID in accordance with this chapter in their projects. (Ord. O2008-236 § 1)

~~**21A.85.030 Sammamish comprehensive low impact development design.**~~
~~Incorporating LID into a project's design in a comprehensive manner is preferred over partial use of LID requiredapproaches. The City shall encourage applicants to utilize comprehensive LID design as defined in this section. Applicants who choose to design a development proposal pursuant to this section shall be eligible to obtain the incentives set forth in SMC 21A.85.070 without being subject to the point system of techniques and incentives contained within this chapter, shall be eligible for a waiver of the density incentive limits contained in SMC 21A.85.070(1) and (2)), and may utilize the short plat process for up to nine lots. In order to be considered to be a project which incorporates Sammamish comprehensive LID, the project must:~~

~~(1) Use all of the following LID approaches:(a) SMC 21A.85.040(1), retention of 50 percent of existing forested condition, or SMC 21A.85.040(2), retention and restoration of 50 percent vegetated area; and~~

~~(b) SMC 21A.85.040(4), limited site disturbance; and~~

~~(c) SMC 21A.85.040(5), pervious pavements; and~~

~~(d) SMC 21A.85.040(6), on-site infiltration; and~~

~~(e) SMC 21A.85.040(9), reduced impervious surface. (Ord. O2008-236 § 1)~~

21A.85.~~040~~030 ~~General l~~Low impact development approaches ~~and standards~~.
The following list identifies preferred LID approaches that may be proposed within any zoning designation and the technique points associated with the successful use of each approach. Whether the implementation of any LID approach is sufficient to earn technique points shall be subject to the review and approval of the director.

(1) Retention of ~~50 Percent of~~ Existing Forested Condition – Up to 25~~20~~ Technique Points.

(a) The applicant may earn up to 25 technique points for ~~may~~ retaining up to 50 percent of the subject site's remaining existing forested area after meeting retention standards in accordance to Development Standards – Trees 21A.37;

(b) Existing forested areas shall be subject to the Development Standards – Trees 21A.37~~tree protection standards of SMC 21A.35.230~~ and the maintenance and irrigation requirements of SMC 21A.35.110 through 21A.35.140.

(c) Technique points shall be awarded for retention as follows:

(i) Retention of 10 percent of existing forested condition – 5 technique points.

(ii) Retention of 20 percent of existing forested condition – 10 technique points.

(iii) Retention of 30 percent of existing forested condition – 15 technique points.

(iv) Retention of 40 percent of existing forested condition – 20 technique points.

(v) Retention of 50 percent of existing forested condition – 25 technique points.

(2) ~~Retention and~~ Restoration of ~~50 Percent~~ Vegetated Area – Up to ~~15~~ 20 Technique Points.

(a) The ~~application~~ applicant may earn up to 20 technique points for~~may~~ ~~retaining and/or restor~~restoring up to~~e~~ 50 percent of the subject site in one or more permanent open space tracts ~~;~~after meeting retention standards in accordance to Development Standards – Trees 21A.37;

(b) Technique points shall be awarded for ~~retention~~restoration as follows:

(i) ~~Retention and restoration~~Restoration of 10 percent of vegetated area – 4 technique points.

(ii) Restoration ~~Retention and restoration~~ of 20 percent of vegetated area – 8 technique points.

(iii) Restoration ~~Retention and restoration~~ of 30 percent of vegetated area – 12 technique points.

(iv) Restoration ~~Retention and restoration~~ of 40 percent of vegetated area – 16 technique points.

(v) Restoration ~~Retention and restoration~~ of 50 percent of vegetated area – 20 technique points.

(~~c~~c)~~(b)~~ ~~Open space tracts and~~ Restoration of ~~vegetation~~ vegetated areas shall be subject to the Development Standards – Trees 21A.37 ~~tree protection standards of SMC 21A.35.230~~ and the maintenance and irrigation requirements of SMC 21A.35.110 through 21.A.35.140. Landscaping plans for open space tracts shall be designed consistent with SMC 21A.35.080 and 21A.35.100;

(d~~d~~)~~(c)~~ ~~An area shall be considered an open space tract if it is:~~

~~(i) An existing forested area which comprises less than 50 percent of the subject site; or~~

~~(ii)~~ Restoration areas ~~S~~shall be landscaped as part of the site's development and meets the following requirements:

i. ~~(A)~~ The site design shall maximize the amount of existing mature vegetation retained on site;
ii. ~~(B)~~ The revegetation plan shall be designed by a licensed professional or ISA certified arborist;
iii. ~~(C)~~ The plantings shall provide a multilayer canopy of large trees (50 percent), small trees, shrubs, and ground cover at maturity;
iv. ~~(D)~~ A minimum of 75 percent of the open space tract shall be planted with trees, shrubs and groundcover. Groundcover does not include pasture or turf;

v. ~~(E)~~ All invasive plants on the site shall be removed;
vi. ~~(F)~~ No more than 15 percent of the proposed open space tract shall be pasture or turf;
vii. ~~(G)~~ Plants shall be selected by a licensed professional based upon site suitability;
viii. ~~(H)~~ For proposed open space tracts exceeding one-half acre in area, a ratio of two evergreens to one deciduous tree is required;
ix. ~~(I)~~ Three trees shall be planted per 1,000 square feet of proposed open space tract area;
x. ~~(J)~~ Trees shall be native to the coastal Pacific Northwest. On planting, deciduous trees shall have a minimum caliper of three-quarters inch and coniferous and broadleaf evergreen trees shall be at least five feet in height;
xi. ~~(K)~~ Eighty percent of shrubs and 80 percent of groundcover shall be species native to the coastal Pacific Northwest; and
xii. ~~(L)~~ Shrubs shall be spaced a maximum of four feet on center and ground cover shall be spaced a maximum of two feet on center.
xiii. ~~(M)~~ Significant trees retained in an open space tract may also be counted towards total tree retention requirements for the parcel.

~~(e)(d) A single contiguous critical area tract, required pursuant to SMC 21A.50.190, may be used to satisfy this technique. Critical area tracts that do not constitute 50 percent of the area within the subject site may be credited for a proportionate amount of the proposed 50 percent open space retention (see Diagram A).~~

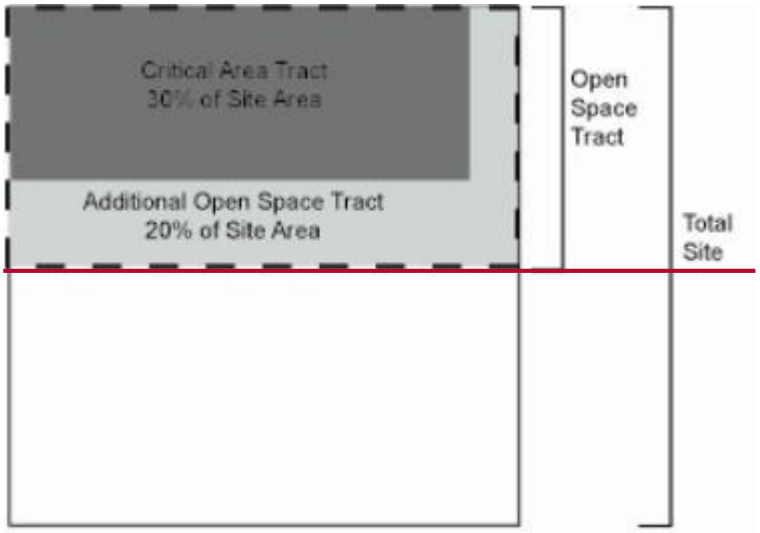

~~**Diagram A**~~

(3) Restoration of Critical Area Buffers– Up to 20 Technique Points.

(a) The applicant may earn up to 20 technique points for restoring up to 50 percent of the critical area buffers within a development site

(b) Technique points shall be awarded for restoration as follows:

(i) Restoration of 10 percent of vegetated area – 4 technique points.

(ii) Restoration of 20 percent of vegetated area – 8 technique points.

(iii) Restoration of 30 percent of vegetated area – 12 technique points.

(iv) Restoration of 40 percent of vegetated area – 16 technique points.

(v) Restoration of 50 percent of vegetated area – 20 technique points.

(c) Restoration of critical area buffers shall be subject to mitigation standards in accordance to SMC 21A.50 and the maintenance and irrigation requirements of SMC 21A.35.110 through 21A.35.140.

(4) Increased Width of Critical Area Buffer – ~~Eight~~ 10 Technique Points.

(a) The applicant may increase the width of a critical area buffer required under Chapter 21A.50 SMC by 35 percent.

(b) Any such increased width may also be included as part of a contiguous critical area tract counting as open space tract under subsection (2) of this section (see Diagram B).

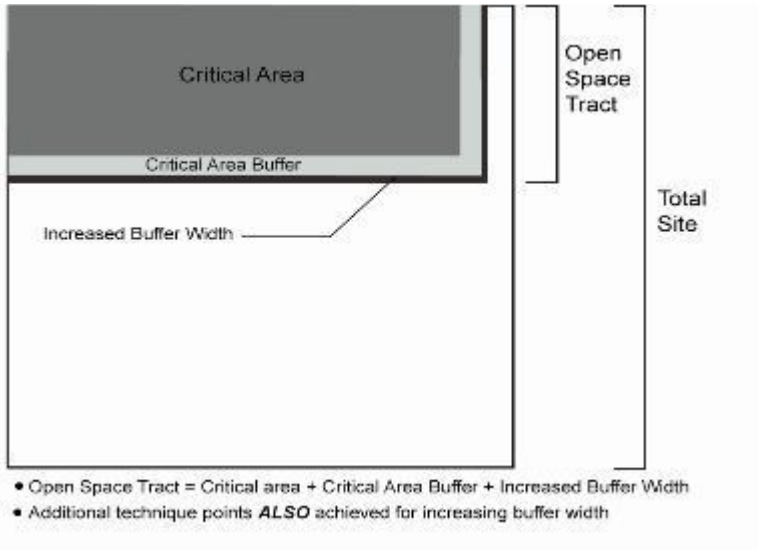

Diagram B

(~~4~~5) Limited Site Disturbance – ~~10~~ 12 Technique Points.

(a) Soil disturbance of the site shall be limited to 50 percent of the site area otherwise unconstrained by environmentally critical areas and associated buffers and tree protection standards during plat and subsequent building construction;

(b) Limited clearing may occur within the area where soil is undisturbed, subject to the following limitations:

(i) The top four inches of soil may be disturbed but not removed from the site or lot, as needed to allow for removal of unsuitable vegetation; provided, that the disturbed soil is moved to an isolated location where it will not be driven upon and such soil is then returned and respread on the parcel;

(ii) Six inches of arborist chippings are placed on top of in-place soil areas that may be subject to construction activities or operations;

(iii) Soil that is not protected as set forth in subsection (4)(b)(i) or (4)(b)(ii) of this section shall be tilled to a depth of 12 inches upon completion of all site disturbance;

(iv) Stump removal shall consist of grinding the stump in the existing location; and

(v) In no case shall the natural grade of the undisturbed area be modified by more than four inches.

~~(5) Pervious Pavements/Materials – 10 Technique Points.~~

~~(a) Residential Development. Pervious pavements/materials shall be used for 80 percent of all proposed hard surfaces, including but not limited to private driveways, patios, squares, courtyards, walkways, private roads, parking areas, and sidewalk areas;~~

~~(b) Commercial/Institutional Developments. Pervious pavements/materials shall be used for 80 percent of all proposed hard surfaces, including but not limited to sidewalk areas, playgrounds, plazas, courtyards, sports courts, and parking areas;~~

~~(c) Public road areas and public sidewalks shall be excluded from the calculation of a site's proposed total hard surface area hereunder;~~

~~(d) Pervious pavement/materials may only be installed on sites where:~~

~~(i) Information has been generated by a certified professional (e.g., a geotechnical engineer) and approved by the City engineer, demonstrating that the pervious pavement installation shall function as designed; and~~

~~(ii) Installation shall be performed by a contractor experienced in the installation of pervious pavements and materials.~~

~~(e) All pervious pavement shall be maintained in accordance with the manufacturer's or industry recommendations, as applicable.~~

~~(6) On-Site Infiltration – Eight Technique Points.~~

~~(a) Ninety percent of the site's runoff shall drain to one or more on-site infiltration systems;~~

~~(b) The on-site infiltration system shall be designed to accommodate the design volumes for the site's runoff up to and including the 100-year storm; and~~

~~(c) All infiltration systems shall be designed and maintained in accordance with the adopted King County Surface Water Design Manual and shall be reviewed and approved by the City engineer on a site-specific basis.~~

~~(7) Biofiltration Swale(s) and Rain Gardens – Eight Technique Points.~~

~~(a) Residential Development. See SMC 21A.85.050(1) for points and design standard;~~

~~(b) Commercial/Institutional Development. Ninety percent of the subject site shall drain to biofiltration swales or rain gardens;~~

~~(c) Biofiltration swales and rain gardens proposed on sites located outside the Beaver or Pine Lake management areas shall be:~~

~~(i) Designed and maintained in accordance with the adopted King County Surface Water Design Manual or the Low Impact Development Technical Guidance Manual for Puget Sound; and~~

~~(ii) Reviewed and approved by the City engineer.~~

~~(d) Biofiltration swales and rain gardens proposed on sites located within the Beaver or Pine Lake management areas:~~

~~(i) Shall not include amended soil;~~

~~(ii) Shall have the upper 12 inches of native soil tilled prior to planting;~~

~~(iii) Except as set forth in subsections (7)(d)(i) and (7)(d)(ii) of this section, shall be designed and maintained in accordance with the adopted King County Surface Water Design Manual or the Low Impact Development Technical Guidance Manual for Puget Sound; and~~

~~(iv) Shall be reviewed and approved by the City engineer.~~

(~~5~~6)~~(8)~~ Reforestation – ~~Six~~ Eight Technique Points.

(a) No stormwater facility modeling credits to reduce sizing of required flow control or water quality facilities in accordance to the adopted Surface Water Design Manual shall be provided for reforestation unless reforestation areas are contained within a designated tract as approved by the director.

(~~a~~b) Residential Development. All of the lots within a residential development shall be reforested prior to final occupancy is issued on the development;

(~~b~~c) Commercial/Institutional Development. The site shall be reforested;

(~~c~~d) Reforestation shall consist of:

(i) For lots of 4,000 square feet or less, a minimum of two trees planted per lot;

(ii) For lots greater than 4,000 square feet in area, a minimum of ~~three~~ two trees plus one additional tree planted per 1,000 square feet over 4,000 square feet;

(iii) Trees shall be native to the coastal Pacific Northwest. On planting, deciduous trees shall have a minimum caliper of three-quarters inch and coniferous and broadleaf evergreen trees shall be at least five feet in height.

(~~6~~7)~~(9)~~ Reduced Impervious Surface – Up to 12~~Seven~~ Technique Points.

(a) Lots created through a development proposal shall qualify for points under this subsection if each lot's total impervious surface area is ~~20 percent~~ less than the applicable maximum allowable impervious surface area pursuant to SMC 21A.25.030 or 21A.25.040, as applicable ~~(e.g., the maximum impervious surface area of a site within the R-4 zone would could be reduced from 55 percent to 35 percent and the maximum impervious surface area of a site within the CB zone would be reduced from 85 percent to 65 percent);~~and after meeting maximum impervious surface standards in accordance to the adopted Surface Water Design Manual;

(b) Technique points shall be awarded for reduced impervious surface as follows:

(i) Each lot total impervious surface is 5 percent less than the applicable maximum allowable impervious surface area – 3 technique points.

(ii) Each lot total impervious surface is 10 percent less than the applicable maximum allowable impervious surface area – 6 technique points.

(iii) Each lot total impervious surface is 15 percent less than the applicable maximum allowable impervious surface area – 9 technique points.

(iv) Each lot total impervious surface is 20 percent less than the applicable maximum allowable impervious surface area – 12 technique points.

(c)~~(b)~~ Impervious surface areas which are public roads or public sidewalks shall be excluded from the calculation of the site's total impervious surface area hereunder; and

(d)~~(c)~~ The allowed increases in the maximum permitted impervious surface area for smaller lots pursuant to SMC 21A.25.030 and 21A.25.040 shall not apply to this subsection.

~~(10) Drought-Tolerant Landscaping – Three Technique Points. Ninety percent of required street landscaping, recreation tracts, and open space tracts shall be landscaped with drought-resistant vegetation native to Western Washington. Such vegetation shall be maintained as required for plant health.~~

~~(11) LID Consultation with the City – Five Technique Points.~~

~~(a) Prior to site design, the applicant shall meet and consult with the City to identify opportunities to incorporate preferred LID approaches into the site's design. The applicant shall bring the following materials to the meeting:~~

~~(i) A survey of the site which includes topography, critical areas, and existing vegetation, including tree sizes and species; and~~

~~(ii) Photographs of the site.~~

~~(b) The City will bring to the meeting any relevant environmental information it has readily available concerning the site, which may include soil surveys, groundwater depths, habitat maps, and the like.~~

~~(12) Performance Guarantee for LID Approaches – Required. In order to receive points under this section for employing LID approaches on a project site:~~

~~(a) The developer shall prepare and distribute a maintenance plan to all property owner(s) that addresses:~~

~~(i) Structural and drainage maintenance;~~

~~(ii) Vegetation management; and~~

~~(iii) Establishment and appropriate long-term irrigation.~~

~~(b) The developer shall obtain written agreement from all property owners to comply with the maintenance plan and to maintain and retain all LID approaches employed on the site for a period of not less than 15 years from the date of construction. The agreement must include wording that if all or part of any LID approach ceases to function or is removed, equivalent LID approach(es) must be installed and all other stormwater management requirements met, prior to removal.~~

~~(c) The developer shall provide the City with a copy of the maintenance plan and all written agreements with property owners obtained under this section.~~

~~(13) Vegetated Roofs – One to 20 Technique Points.~~

~~(a) A roof area shall be considered a vegetated roof if:~~

~~(i) The roof area is fully covered with vegetation;~~

~~(ii) It meets the definition of a vegetated roof set forth in the adopted King County Surface Water Design Manual or the Low Impact Development Technical Guidance Manual for Puget Sound; and~~

~~(iii) It is designed and maintained in accordance with the adopted King County Surface Water Design Manual or the Low Impact Development Technical Guidance Manual for Puget Sound.~~

~~(b) Residential Development. Two technique points shall be awarded per 10 percent of dwelling units whose roof is a vegetated roof up to a maximum of 20 total points;~~

~~(c) Commercial/Institutional Development. One technique point shall be awarded per 1,000 square feet of vegetated roof area up to a maximum of 20 total points;~~

~~(d) Compliance with this LID approach shall require review and approval by the building official. (Ord. O2008-236 § 1)~~

~~21A.85.050 Residential preferred LID approaches and standards.~~

~~The following list identifies preferred LID approaches that may only be proposed for residential development proposals and the technique points associated with the successful completion of each technique. Whether the implementation of any technique is sufficient to earn credit for an incentive shall be subject to the review and approval of the director.~~

~~(1) Biofiltration Swales and Rain Gardens – 10 Technique Points.~~

~~(a) Sixty-five percent of the site's stormwater runoff shall be directed to a biofiltration system.~~

~~(b) Except as set forth in subsection (1)(a) of this section, biofiltration swales and rain gardens proposed on sites located outside a lake management area shall be:~~

~~(i) Designed consistent with the adopted King County Surface Water Design Manual, and shall be subject to the review and approval of the City engineer; and~~

~~(ii) Reviewed and approved by the City engineer.~~

~~(c) Except as set forth in subsection (1)(a) of this section, biofiltration swales and rain gardens proposed on sites located within a lake management area:~~

~~(i) Shall not include amended soil;~~

~~(ii) Shall have the upper 12 inches of native soil tilled prior to planting;~~

~~(iii) Except as set forth in subsections (1)(c)(i) and (1)(c)(ii) of this section, shall be designed and maintained in accordance with the adopted King County Surface Water Design Manual or the Low Impact Development Technical Guidance Manual for Puget Sound; and~~

~~(iv) Shall be reviewed and approved by the City engineer.~~

~~(7)~~(2) Open Space ~~–~~ ~~10~~ 12 Technique Points.

~~(a) Thirty percent of the total site area within a residential development shall be retained in its existing forested condition as defined in SMA 21A.85.040(1); or~~

~~(b) Thirty percent of the total site area within a residential development shall be retained and restored to a permanent open space tract as defined in SMA 21A.85.040(2);~~

~~(i) Limited clearing/grading within 20 percent of the open space tract shall be permitted solely to allow for the installation of passive recreation uses, including but not limited to soft surface trails, benches, and picnic tables;~~

~~(ii) Open space tracts shall be located outside of critical areas and critical area buffers.~~

~~(c) Area retained in its existing forested condition or as open space tracts may be used to satisfy the recreation space requirements of SMC 21A.30.140, On-site recreation – Space required.~~

~~(8)~~(3) Minimal Foundation Excavation – ~~10~~ 12 Technique Points.

(a) All of the structures within a residential development shall be designed with minimal foundation excavation which shall include:

(i) Limited or no disturbance of the natural soil profile within the footprint of all proposed structures. “Limited disturbance” shall have the meaning set forth in SMA 21A.85.040(4);

(ii) Using a foundation that consists of a combination of driven piles and a connection at or above the existing grade of the subject site.

(b) Compliance with this technique shall require review and approval by the building official.

~~(4) Soil Amendments – Three Technique Points. Only sites located outside a lake management district may employ this technique. On qualifying sites, four inches of soil amendments may be tilled into the top 12 inches of the site areas to be used for landscaping, including but not limited to proposed landscaping tracts, recreation tracts, and individual lots. Soil amendments:~~

~~(a) Shall be added during soil preparation for permanent landscaping and prior to final building inspection; provided, that if the project is a subdivision, one bond for all of the lots within the subdivision shall be recorded prior to final plat; and~~

~~(b) Shall consist of compost that complies with City standards as of the date of submittal.~~

(~~9~~9)~~(5)~~ Joint Use Driveway – ~~Four~~ Six Technique Points.

(a) Sixty-five percent of lots within a proposed residential development shall be accessed from a joint use driveway. A "joint use driveway" is ~~a driveway for two or more residences that shares a curb cut plus a minimum of 10 feet of shared access~~defined by the current ~~adopted~~ *Public Works Standards*.

(~~10~~10)~~(6)~~ Hollywood Driveway – ~~Six~~ Eight Technique Points.

(a) Sixty-five percent of lots within a proposed residential development shall be accessed from a Hollywood driveway. A Hollywood driveway consists of two paved wheel tracks between two and one-half and three and one-half feet wide separated by a planted strip at least three feet wide~~. (Ord. O2008-236 § 1)~~.

~~**21A.85.060 Town center LID approaches and standards.**~~
~~Reserved. (Ord. O2008-236 § 1)~~

21A.85.~~070~~040 ~~Preferred~~ LID incentives.
Technique points earned by installing one or more of the ~~preferred~~ LID approaches described in SMC 21A.85.~~040~~ 030 ~~through 21A.85.060~~ may be used to obtain the following LID incentives. ~~These incentives are completely separate from any credits for the use of LID approaches that may be granted to the applicant under applicable stormwater flow control and water quality treatment regulations. In certain cases, a LID approach that qualifies for the incentives described in this section may not qualify for credits under the stormwater regulations.~~ Technique points are cumulative and may be combined to gain the use of one or more incentives below. Technique points may only be used for obtaining incentives for the development proposal that generates the points and may not be used for other development proposals. Except as otherwise noted in this section, technique points may only be used once.

(1) Twenty Percent Increased Density. Subject to compliance with the provisions of Chapter 21A.50 SMC, Environmentally Critical Areas, ~~and so long as increasing the site's density will not negatively impact any critical areas or critical area buffers on the site or adjacent to the site,~~ this density incentive may be used to increase the site density permitted under SMC 21A.25.030 and 21A.25.040, as applicable, by up to 20 percent.

(a) Thirty Technique Points Required. The applicant may include up to 75 percent of the area within streets within the site density calculations required under SMC 21A.25.080;

(b) Twenty-Seven Technique Points Required. The applicant may include up to 50 percent of the area within streets within the site density calculations required under SMC 21A.25.080;

(c) Twenty-Four Technique Points Required. The applicant may include up to 25 percent of the area within streets within the site density calculations required under SMC 21A.25.080.

(2) Thirty Percent Increased Density Incentive. Subject to compliance with the provisions of Chapter 21A.50 SMC, Environmentally Critical Areas, ~~and so long as increasing the site's density will not negatively impact any critical areas or critical area buffers on the site or adjacent to the site,~~ this density incentive may be used to increase the site density permitted under SMC 21A.25.030 and 21A.25.040, as applicable, by up to 30 percent.

(a) Forty Technique Points Required. The applicant may include up to 75 percent of the area within critical areas and critical area buffers within the site density calculations required under SMC 21A.25.080;

(b) Thirty-Five Technique Points Required. The applicant may include up to 50 percent of the area within critical areas and critical area buffers within the site density calculations required under SMC 21A.25.080;

(c) Thirty Technique Points Required. The applicant may include up to 25 percent of the area within critical areas and critical area buffers within the site density calculations required under SMC 21A.25.080.

~~(3) Street Improvement and Right-of-Way Reduction. All reductions allowed pursuant to this section shall be subject to review and approval by the City engineer:~~

~~(a) One Technique Point Required. Variation requests submitted pursuant to this section shall be given preference over non-LID-related variation requests;~~

~~(b) Twenty Technique Points Required. The applicant may request a variation from the public works standards to reduce the required public right-of-way dedication from 60 feet to 56 feet and to reduce the required street improvement to 49 feet. Such a reduction shall include:~~

~~(i) Providing parking only on one side of the street (i.e., requiring 28 feet of paved asphalt for a 20-foot-wide street plus one eight-foot-wide parking lane); and~~

~~(ii) Reversed planter strip and sidewalk on the parking side.~~

~~(c) Sixteen Technique Points Required. The applicant may request a variation from the public works standards to reduce the required street improvement to 49 feet of improvement to include:~~

~~(i) Parking only on one side of the street (i.e., requiring 28 feet of paved asphalt for a 20-foot-wide street plus one eight-foot-wide parking lane); and~~

~~(ii) Reversed planter strip and sidewalk on the parking side.~~

~~(d) Eighteen Technique Points Required. The applicant may request a variation from the public works standards to reduce the required public right-of-way dedication from 60 feet to 56 feet and to reduce the required street improvements to 46 feet including:~~

~~(i) Pocket parking (eight-foot depth) on alternating sides of the street;~~

~~(ii) Twenty feet of paved asphalt travel lanes;~~

~~(iii) Five-foot sidewalks on both sides of the street; and~~

~~(iv) Landscaping (eight-foot depth) on alternating sides of the street (i.e., opposite parking).~~

~~(c) Eighteen Technique Points Required. The applicant may request a variation from the public works standards to reduce the required street improvement to 56 feet of improvement to include:~~

~~(i) Parking on one side of the street (28 feet of paved asphalt); and~~

~~(ii) Standard sidewalks and planter strips.~~

(3)~~(4)~~ Recognition – 24 Technique Points Required. The applicant may request that the City generate a featured LID development article in the City newsletter covering the development which has earned the technique points. Technique points used for this incentive may be reused to obtain additional incentives.

(4)~~(5)~~ Building Height Incentive – 20 Technique Points Required. Subject to compliance with the provisions of Chapter 21A.50 SMC, Environmentally Critical Areas, and so long as increasing building height will not negatively impact any critical areas or critical area buffers on the site or adjacent to the site, the applicant may increase the maximum building height by up to 15 feet.

(5)~~(6)~~ Increased Signage – 12 Technique Points Required. The applicant may increase the allowed signage pursuant to Chapter 21A.45 SMC by:

(a) Adding one additional monument sign; or

(b) Increasing the size of the allowed sign by 10 percent.

(6)~~(7)~~ Attached Housing – 12 Technique Points Required. One hundred percent of the lots within a proposed residential development may be designed to accommodate attached housing consistent with SMC 21A.30.020. ~~(Ord. O2008-236 § 1)~~

21A.85.~~080~~050 Review.

(1) Process. The use of preferred LID approaches or full LID design shall be reviewed concurrently with a primary proposal to consider the proposed site plan and methods used to earn the incentives as follows:

(a) For the purpose of this section, a “primary proposal” is defined as a proposed subdivision, binding site plan, conditional use permit, or commercial site development permit;

(b) The applicant shall identify the proposed techniques and incentives at the time of the first permit application for the primary proposal;

(c) When the primary proposal requires a public hearing under this chapter or SMC Title 19 or 20, the public hearing on the primary proposal shall serve as the hearing on the ~~preferred~~ LID approaches proposed, and the reviewing authority shall make a consolidated decision on the proposed development and use of techniques and the resulting incentives;

(d) When the primary proposal does not require a public hearing under this chapter or SMC Title 19 or 20, the LID approach proposal shall be subject to the decision criteria for conditional use permits outlined in Chapter 21A.100 SMC and to the procedures set forth in SMC Title 20;

(e) All notices required by Chapter 20.05 SMC for the proposed development shall include a brief description of the proposed ~~preferred~~ LID approaches and associated incentives; and

(f) A notice on title and~~or~~ conditions on the face of final plat or equivalent recorded document shall be required documenting the use of ~~preferred~~ LID approaches ~~or use of Sammamish comprehensive LID~~ and identifying limitations on future development.

(g) A maintenance plan shall be prepared and distributed to all property owner(s)that addresses structural and drainage maintenance, vegetation management, establishment and appropriate long-term irrigation. The applicant shall obtain written agreement from all property owners to comply with the maintenance plan and to maintain and retain all LID approaches employed on the site and credited for incentives for a period of not less than 15 years from the date of construction. The agreement must include wording that if all or part of any LID approach ceases to function, is removed, or in the case of reduction in impervious surface limits exceeds the limit as approved as part of this chapter, equivalent LID approach(es) must be installed and all other stormwater management requirements met prior to removal. The applicant shall provide the City with a copy of the maintenance plan and all written agreements with property owners obtained under this section.

(2) Review. In evaluating the feasibility of a preferred LID approach proposal or Sammamish comprehensive LID proposal, the director shall have the authority to request additional technical information prepared by a certified professional to:

(a) Determine whether the development proposal is consistent with this chapter;

(b) Determine if a proposed approach is consistent with the standards of the ~~King County~~ current Surface Water Design Manual, City of Sammamish Stormwater Comprehensive Plan, or the Low Impact Development Technical Guidance Manual for Puget Sound, or other suitable reference, as determined by the director;

(c) Determine whether the proposed combination of techniques adequately work together toward meeting the goals of this chapter;

(d) Determine if the monitoring plans and bonding measures proposed by the applicant are sufficient to protect the public benefit, health, safety, and welfare, consistent with this chapter; and

(e) Determine that the proposed LID approaches shall function as intended.

(3) Health and Safety. Approval of all proposed LID approaches, Sammamish comprehensive LID, and incentives grants shall be subject to the review of the City to determine that the proposed development does not pose an unreasonable threat to the public health, safety, or welfare on or off the development proposal site and is consistent with the general purposes of this chapter and the public interest.

(4) Adjustments.

(a) Minor. When reviewing and issuing construction permits in an approved development, the department may allow minor adjustments in the approved approaches and incentives used by the development proposal involving the location and site-specific approaches or incentives.

(b) Major. Changes to a development proposal that result in significant adjustments to the project shall require resubmittal of the development proposal pursuant to subsection (1) of this section. Significant adjustments include, but are not limited to, elimination of proposed LID approaches, increases in the number of dwelling units generated, or additional reduction of proposed street improvements.

~~(5) Maintenance of Low Impact Development Chapter. The director shall evaluate this chapter at least once every three years. Following review, the director shall:~~

~~(a) Identify any LID approaches, incentives, or other features of this chapter that are resulting in projects that meet the purpose of this chapter;~~

~~(b) Update this chapter in light of current research on the effectiveness of various LID approaches;~~

~~(c) If the director identifies items that require a code amendment, the director shall report back to the planning commission and City council. (Ord. O2008-236 § 1)~~

Attachment H

Chapter 21B.15

TECHNICAL TERMS AND LAND USE DEFINITIONS

Sections:
[…]
21B.15.080 Clustered development.
[…]
21B.15.230 Low impact development.
[…]
21B.15.310 Rain garden.
[…]

[…]

21B.15.080 Clustered development.
"Clustered development" means concentrating lots or buildings in areas to avoid development of sensitive or hazardous areas, or to minimize impervious surfaces and stormwater runoff. (Ord. O2010-293 § 1 (Att. A § 21B.15.035))

[…]

21B.15.230 Low impact development.
Low impact development (LID) is a stormwater and land use management strategy that strives to mimic pre-disturbance hydrologic processes of infiltration, filtration, storage, evaporation and transpiration by emphasizing conservation, use of on-site natural features, site planning, and distributed stormwater management practices that are integrated into a project design.~~emphasizes conservation and use of existing natural site features integrated with distributed, small-scale stormwater controls to more closely mimic natural hydrologic patterns in residential, commercial, and industrial settings~~. (Ord. O2010-293 § 1 (Att. A § 21B.15.100))

[…]

21B.15.310 Rain garden.
"Rain garden" means a non-engineered shallow, ~~planted~~ landscaped depression, with compost-amended native soils and adapted plants that allows rainwater runoff from impervious areas like roofs, driveways, walkways, and compacted lawn areas to pond, temporarily be stored, pass through the amended soil profile and~~the opportunity to~~ be absorbed. (Ord. O2010-293 § 1 (Att. A § 21B.15.135))

[…]

Attachment I

Chapter 21B.25

DEVELOPMENT STANDARDS – DENSITY AND DIMENSIONS

Sections:
[…]
21B.25.040 Provisions to obtain additional (bonus) residential density or commercial development capacity.
[…]

[…]

21B.25.040 Provisions to obtain additional (bonus) residential density or commercial development capacity.
(1) Bonus Residential Dwelling Units. SMC 21B.25.030 identifies the "maximum density" and "allocated density" for each Town Center zone. Projects may obtain additional density by complying with the affordable housing provisions set forth in Chapter 21B.75 SMC, by the incorporation of site amenities subject to TC-D zone residential dwelling unit transfers, and/or through the City's transfer of development rights (TDR) program (subject to the adoption by the City council including the Town Center as a receiving site). Bonus provisions vary by zone. Specifically:

(a) TC-A Zones. Applicants may select from the following options for obtaining additional dwelling units, subject to the provisions below:

(i) Additional dwelling units are awarded from the Town Center's available affordable housing bonus pool subject to compliance with affordable housing provisions set forth in Chapter 21B.75 SMC. Within each quadrant, the bonus pool units shall be distributed on a first come, first served basis, up to the maximum number of bonus pool units, provided the development does not exceed the density limit for the zone.

(ii) Additional dwelling units may also be awarded by the City from its TC-D residential density allocation pursuant to design criteria of subsection (2)(b) of this section.

(iii) Once the affordable housing bonus pool is exhausted, developments may obtain additional units through the City's TDR program or through the provisions of subsection (2)(d) of this section.

(b) TC-B Zones. Additional dwelling units may be awarded from a combination of the following, up to the zone's specified maximum density:

(i) Until the affordable housing bonus pool is exhausted, up to 25 percent of additional requested dwelling units may be taken from the bonus pool (subject to compliance with affordable housing provisions set forth in Chapter 21B.75 SMC). The bonus pool units shall be distributed on a first come, first serve basis, provided the development does not exceed the density limits for the applicable zone.

(ii) Additional dwelling units may also be awarded by the City from its TC-D residential density allocation pursuant to design criteria of subsection (2)(b) of this section.

(iii) Additional dwelling units may be obtained through the City's TDR program.

(c) TC-C Zones. Developments may obtain additional dwelling units only through the City's TDR program, up to the zone's specified maximum density.

(d) TC-D Zone. Developments may obtain additional dwelling units only through the City's TDR program, up to the zone's specified maximum density.

(e) TC-E Zone. Bonus dwelling units are not available in this zone.

See Figures 21B.25.040a and 21B.25.040b for clarification on the distribution of bonus dwelling units per zone.

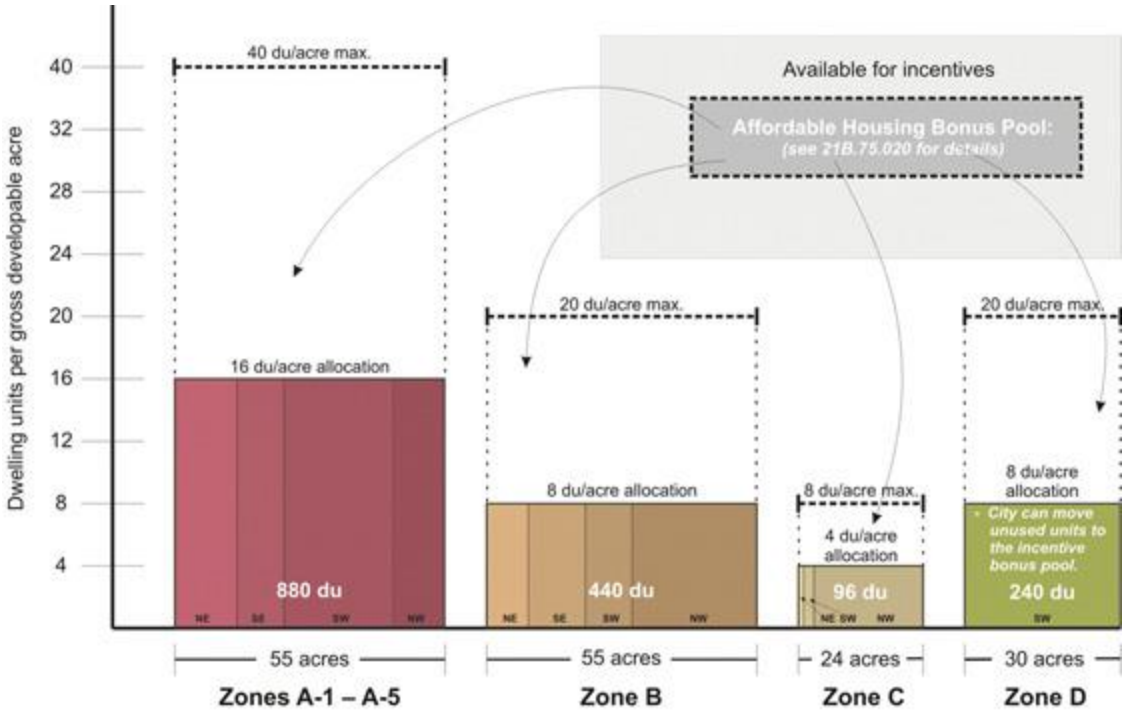

Figure 21B.25.040a. Illustrating the base and maximum residential development allocations (by the number of dwelling units) for the Town Center zones. Note that the pool of dwelling units referenced in the upper box is available for distribution as bonus units.

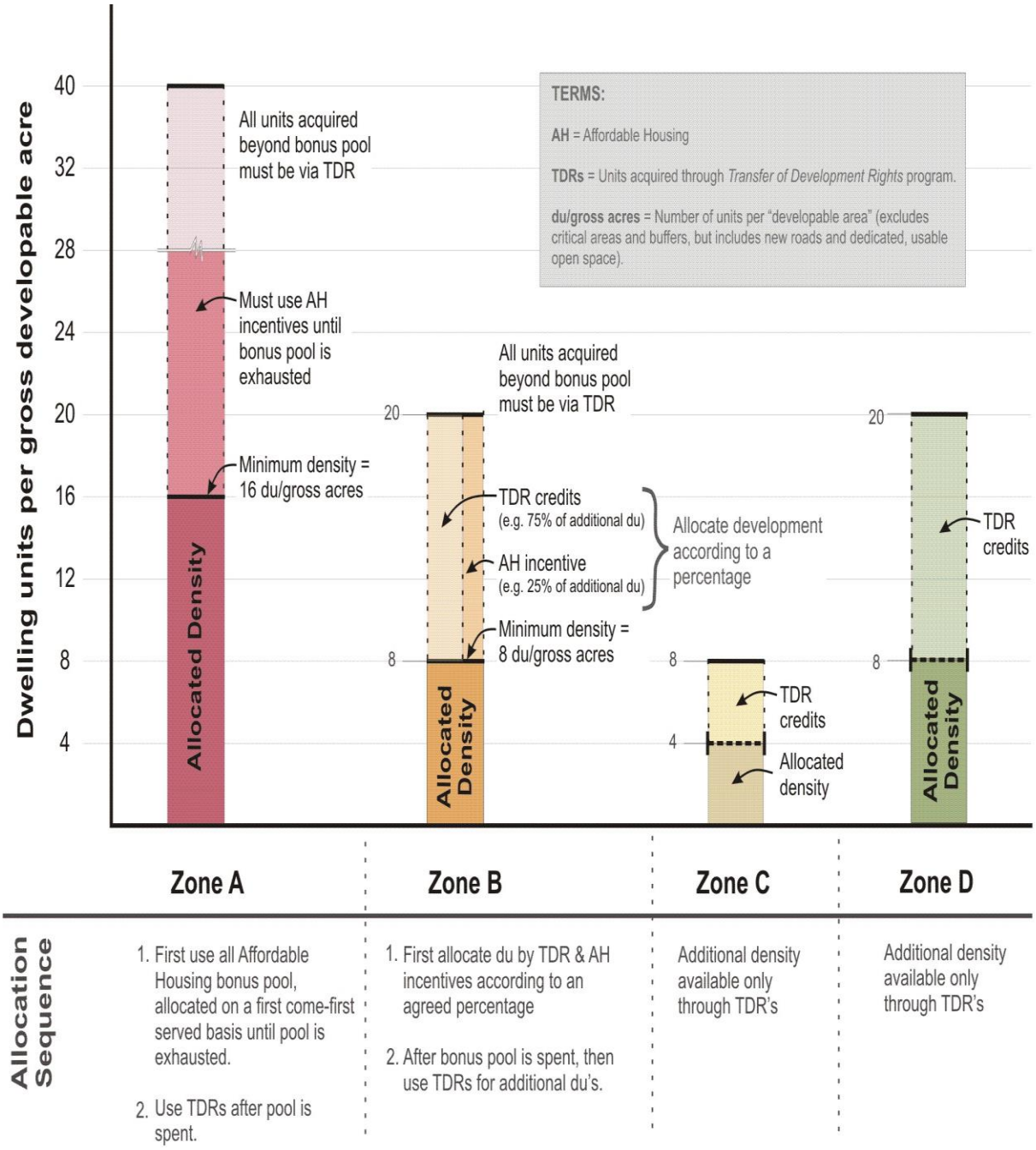

Figure 21B.25.040b. Standards for allocating bonus dwelling units per Town Center zones.

(2) Bonus Commercial and Residential Development Capacity. SMC 21B.25.030 and Figure 21B.25.040c specify commercial floor area allocations by zones and sub-zones with an additional 120,000 square feet of commercial floor area available through bonus incentives. Subsections (2)(a) and (b) of this section provide the distribution and criteria for allocating bonus commercial floor area, respectively. Subsection (2)(b) of this section also includes provisions for allocating bonus residential dwelling units. Subsection (2)(c) of this section provides for the opportunity for additional commercial or residential development

capacity through the City's TDR program. Subsection (2)(d) of this section provides an option for the City to sell units from its TC-D residential density allocation to other properties within the Town Center.

(a) Distribution of Bonus Commercial Development Capacity.

SUB-ZONE	ALLOCATION	MAXIMUM BONUS DISTRIBUTION[1,2]	MAXIMUM ALLOCATION WITH INCENTIVE[1,2]
TC-A-1	200,000	50,000	250,000
TC-A-2	90,000	22,500	112,500
TC-A-3	90,000	22,500	112,500
TC-A-4	70,000	17,500	87,500
TC-A-5	20,000	5,000	25,000
TC-D	10,000	2,500	12,500
TOTAL	480,000	120,000	600,000

Table notes:

1. Bonus floor area shall be distributed on a proportional basis per the maximum levels indicated above until all 120,000 square feet of the available bonus floor area has been distributed. If it becomes clear after five years of adoption of the ordinance codified in this chapter that due to development patterns, the bonus development capacity will not be utilized in any of the A zones or the D zone, the director may allow the allocation of bonus square feet of development to another part of the Town Center, provided the other provisions in this section are met.
2. Bonus floor area allocation is subject to the design criteria specified in subsection (2)(b) of this section.

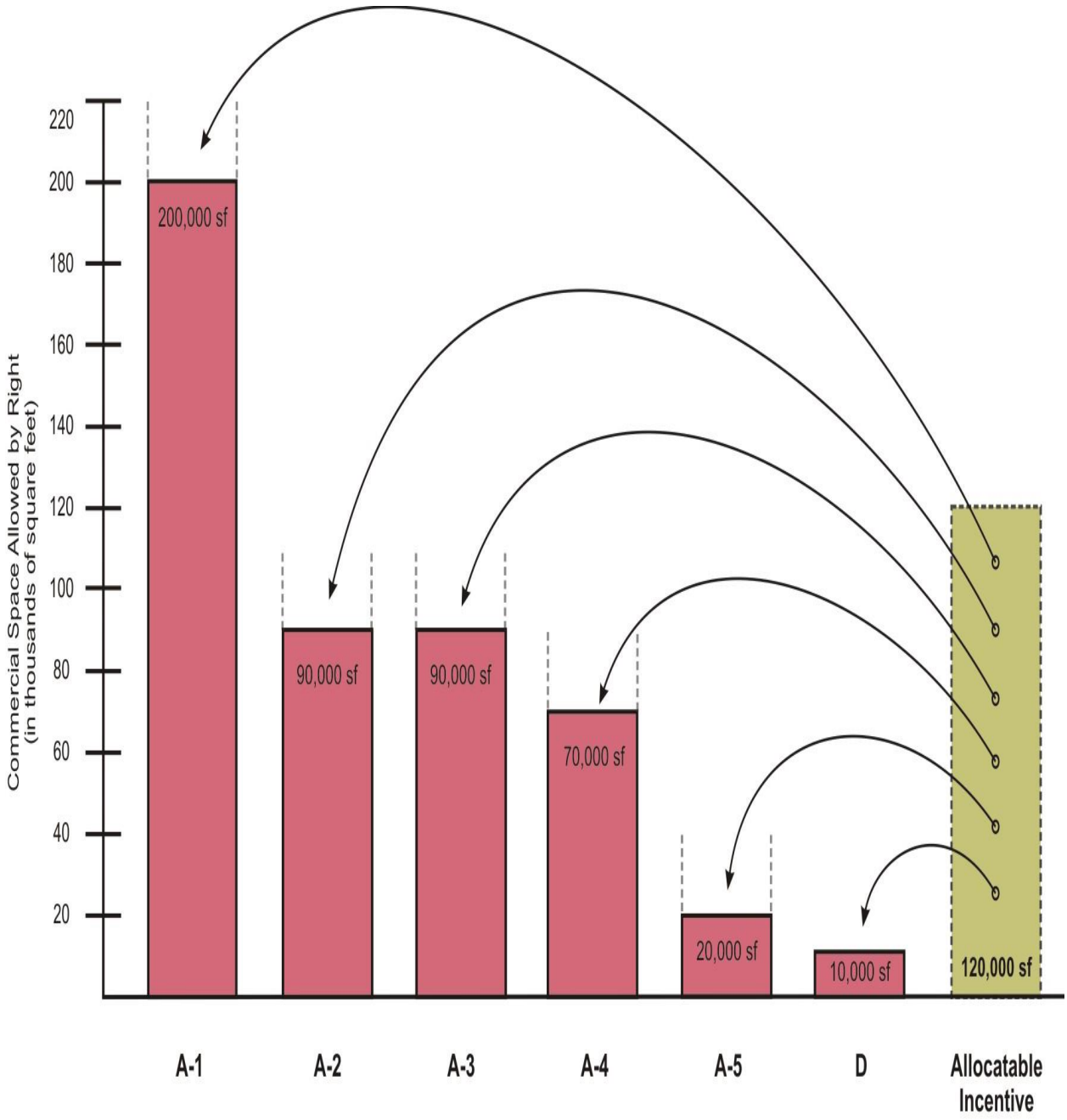

Figure 21B.25.040c. Illustrating the base commercial area allocations by zone and the pool of additional commercial area available for bonuses.

(b) Design Criteria for Awarding Bonus Commercial and Residential Development Capacity. Developments requesting available bonus commercial and residential development capacity (where awarded by the City from its TC-D residential density allocation) shall achieve a higher level of design performance than those specifically required in the Town Center development regulations. In order to qualify for bonus floor area or dwelling units, developments shall incorporate at least five of the

development features listed below as determined in the unified zone development plan or other applicable review process.

(i) An extensive pedestrian network connected to the City's trail system with lighting, landscaping, and other amenities.

(ii) Creative and effective vehicular circulation system that minimizes impacts of motorized vehicles on the pedestrian environment.

(iii) A unique multi-use central open space with special amenities and activities.

(iv) Increased use of structured parking.

(v) Enhanced off-street pedestrian routes that connect to the existing/planned trail system.

(vi) Special accommodation of transit services.

(vii) Extensive environmental restoration and/or tree retention.

(viii) Environmental certification of all structures (LEED, Built Green or other similar certification).

(ix) Enhanced commitment for affordable housing.

(x) Includes a use or uses that will expand the range of activities in the Town Center. Such use or uses might include a gym, dance studio or health center, cultural or performing arts facilities, educational facilities, artists' studios, medical clinics, assembly areas, small business centers and similar uses that will encourage economic diversity, additional local services, pedestrian activity and/or support for other business or community activities.

(xi) Other significant features that exceed the development standards and regulations.

(xii) Low impact development site planning principles/practices that minimize stormwater runoff generated by the development. Such principles may include limited site disturbance, protection of natural drainage paths/features, minimize soil disturbance/compaction and/or restoration of compacted soils back to their original state.

The City shall maintain documentation of bonus floor area awarded in UZDP applications and which development features were utilized to obtain the bonus.

(c) Commercial and residential bonus development capacity may be accessed by use of TDR program. The ratio of TDR credit/amount of commercial or residential development shall be determined by the director and reported periodically to City council.

(d) The City is authorized to sell dwelling units from its TC-D residential density allocation to other properties zoned TC-A within the Town Center. The City shall limit the sale of dwelling units to projects that have a pending land use application within the Town Center at the time of closing of the sale. The price of such units shall be based upon a market analysis performed within 180 days of closing on the sale and the proceeds shall be used for public benefits within the Town Center. Each unit transferred from the TC-D zone into the TC-A zone shall be worth one dwelling unit for development in the TC-A zone. For example, if 10 dwelling units are purchased from the TC-D zone, they may be used to develop 10 dwelling units in the TC-A zone.

Extensive pedestrian network connected to the City's trail system

Vehicle circulation that reduces impacts and enhances the development's organization and open space

Structured parking away from primary open spaces and building entries

Substantive use of low impact development techniques

A unique multi-purpose open space such as this plaza that accomodates a farmer's market

Extensive environmental restoration, especially when incorporated as an amenity as in this case

Special amenity feature

Development configured to maximize tree retention

Figure 21B.25.040d. Examples of exemplary development worthy of consideration for commercial space allocation.

(Ord. 2011-310 § 1 (Att. A); Ord. O2010-293 § 1 (Att. A))

[…]

21B.25.170 Setbacks – Projections and structures allowed.
Provided that the required setbacks from regional utility corridors of SMC 21B.25.140 and the sight distance requirements of SMC 21B.25.200 are maintained, structures may extend into or be located in required setbacks, as follows:

(1) Fireplace structures, bay or garden windows, enclosed stair landings, closets, or similar structures may project 30 inches into a street setback, provided such projections are:

(a) Limited to two per facade; and

(b) Not wider than 10 feet;

(2) Unenclosed porches and entry features may project six feet into the street setback;

(3) Eaves may not project more than:

(a) Twenty-four inches into a street setback;

(b) Eighteen inches across a lot line in a zero lot line development; provided, that any neighboring building and its associated eaves are 10 feet from the lot line;

(4) Fences may be allowed within front, side, or back yard setback per SMC 21B.30.180. For fences along an alley, see SMC 21B.30.260(3);

(5) Rockeries, retaining walls and curbs may project into or be located in any setback, provided these structures do not exceed a height of six feet from the property line grade;

(6) Fences located on top of rockeries, retaining walls or berms are subject to the requirements of SMC 21B.30.180;

(7) Telephone poles and lines; power poles and lines; cable TV and Internet lines; light and flagpoles; trellises not exceeding eight feet in height, not wider than 10 feet; culverts; underground water facilities; underground sewer facilities; and accessory facilities for the provision of utilities, such as drains, but excluding electrical and cellular equipment cabinets, and similar utility boxes and vaults;

(8) The following may project into or be located within a setback, but may only project into or be located within a setback area if an agreement documenting consent between the owners of record of the abutting properties is recorded with the King County department of records and elections prior to the installment or construction of the structure:

(a) Sprinkler systems, electrical and cellular equipment cabinets and other similar utility boxes and vaults;

(b) Security system access controls;

(c) Structures, except for buildings, associated with trails and on-site recreation spaces and play areas required in SMC 21B.30.060 and 21B.30.170 such as benches, picnic tables and drinking fountains; and

(d) Surface water management facilities as required by City of Sammamish stormwater management regulations;

(9) Mailboxes and newspaper boxes may project into or be located within street setbacks but will not be allowed in TC-A zones;

(10) Fire hydrants and associated appendages;

(11) Metro bus shelters may be located within street setbacks;

(12) Unless otherwise prohibited in SMC 21B.25.200 and Chapter 21B.45 SMC, freestanding and monument signs four feet or less in height, with a maximum sign area of 20 square feet, may project into or be located within street setbacks; and

(13) Storm water vaults, structures, and conveyance systems, both above and below ground, provided such projections are:

(a) Consistent with setback, easement and access requirements specified in the current Surface Water Design Manual; or

(b) In the absence of said specifications, not within ten feet of the property line for stormwater vaults and structures, and not within five feet of the property line for conveyance systems

(14) Building elements that (a) do not restrict pedestrian access to or views from the street into the setback area or (b) make a fire or safety hazard or adverse impact. Such elements may, in some conditions, include canopies, awnings, blade signs, and lights.

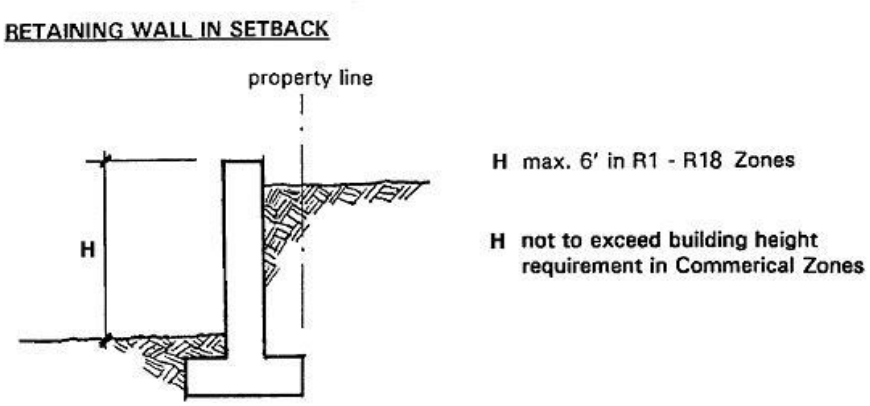

Figure 21B.25.170a. Retaining wall standards.

(Ord. O2010-293 § 1 (Att. A))

Attachment J

Chapter 21B.30

DEVELOPMENT STANDARDS – DESIGN REQUIREMENTS

Sections:
[…]
21B.25.040 Provisions to obtain additional (bonus) residential density or commercial development capacity.
[…]

[…]

21B.30.040 Site planning – Street layout.
The Transportation Element of the Town Center Plan includes goals, policies, and actions aimed at producing a connected hierarchy of streets that accommodates desired Town Center land uses and human activities. Streets within the mixed-use nodes will be planned during the unified zone development planning process (see Chapter 21B.95 SMC) with reference to the Town Center Infrastructure Plan. Other streets may be planned either collectively or by individual property owners. The following provisions serve as guidelines for the unified zone development planning process and development standards if the roads are planned by a private property owner in the TC-B or TC-C zones.

Figure 21B.30.040a illustrates a conceptual layout of streets within the Town Center. While it is expected that the network of streets that is eventually built will differ from this configuration, the provisions below are intended to ensure that new streets meet the goals and policies of the Town Center Plan.

(1) Connected Network of Streets. Project applicants shall demonstrate to the director's satisfaction how the proposed development meets the following policies of the Town Center Plan:

(a) Provide for a safe and connected network of roadways to serve Town Center development;

(b) Limit the placement of buildings or other development features that inhibit the desired connectivity of the Town Center circulation network; and

(c) Configure roadways to minimize impacts to environmentally critical areas.

(2) Provide for a Hierarchy of Streets. Provide for a hierarchy of streets, including:

(a) Connector roads that provide for automobile, service, bicycles, and pedestrian circulation throughout the Town Center. Development in the Town Center shall accommodate connector streets in the northwest, northeast, and southeast quadrants consistent with the goals and policies of the Town Center Plan.

(b) Pedestrian-oriented streets. TC-A-1, A-2, and A-3 zoned areas shall include designated pedestrian-oriented street segment, as determined by the City through the unified zone development planning process. Pedestrian-oriented streets are intended to be streets featuring continuous storefronts or plaza spaces, wide sidewalks, street trees, bioretention, and on-street

parking. Designations for pedestrian-oriented streets could cover an entire street, a single block, or a portion of a block, depending upon the area. Pedestrian-oriented street designations are intended for areas where a concentration of pedestrian activity is desired. See SMC 21B.30.030(1) for related development frontage standards.

(c) Mixed-use streets, which are all other new streets besides connector roads and pedestrian-oriented streets within the TC-A zones. These are localized streets which should include generous sidewalks, street trees, bioretention, on-street parking (to the extent possible), and slow moving traffic.

(d) Residential streets, which are all other new streets besides connector roads within the TC-B and TC-C zones. These are localized streets within residential neighborhoods and should contain sidewalks, planting strips with street trees or bioretention, on-street parking on one or both sides, and slow moving traffic.

(e) Alleys are encouraged where useful to access parking or service areas.

(3) Maximum Block Dimensions for Individual Development. For an individual development, unless otherwise stated in a unified zone development plan, the maximum block length in any direction is 480 feet and maximum block perimeter is 1,400 feet. Departures are permitted in the TC-A zones subject to unified zone development plan approval and compliance with the Town Center Plan's goals and policies. Departures for streets in all other Town Center zones shall be considered by the director based on one or more criteria listed below.

(a) Topography, right-of-way, existing construction or physical conditions, or other geographic conditions impose an unusual hardship on the project applicant, and an equivalent alternative which can meet the Town Center Plan's goals and policies is available;

(b) A departure provides the opportunity for a public open space or other public amenity that would otherwise not be possible;

(c) The location of institutional or other similar uses requires a larger block size; and/or

(d) A private internal road(s) or pedestrian route may be used to meet cross circulation standards as determined by the director per the following:

(i) Adjacent properties do not rely on applicable roadway for primary vehicular access;

(ii) Roadway should be designed to look and function like public streets (planting strips, street trees, sidewalks, and parallel parking, where appropriate per the director); and

(iii) Roadway or pedestrian route shall be accessible to the public.

(4) Multimodal Transportation. The layout of streets shall include consideration of vehicular, transit, bicycle, and pedestrian circulation.

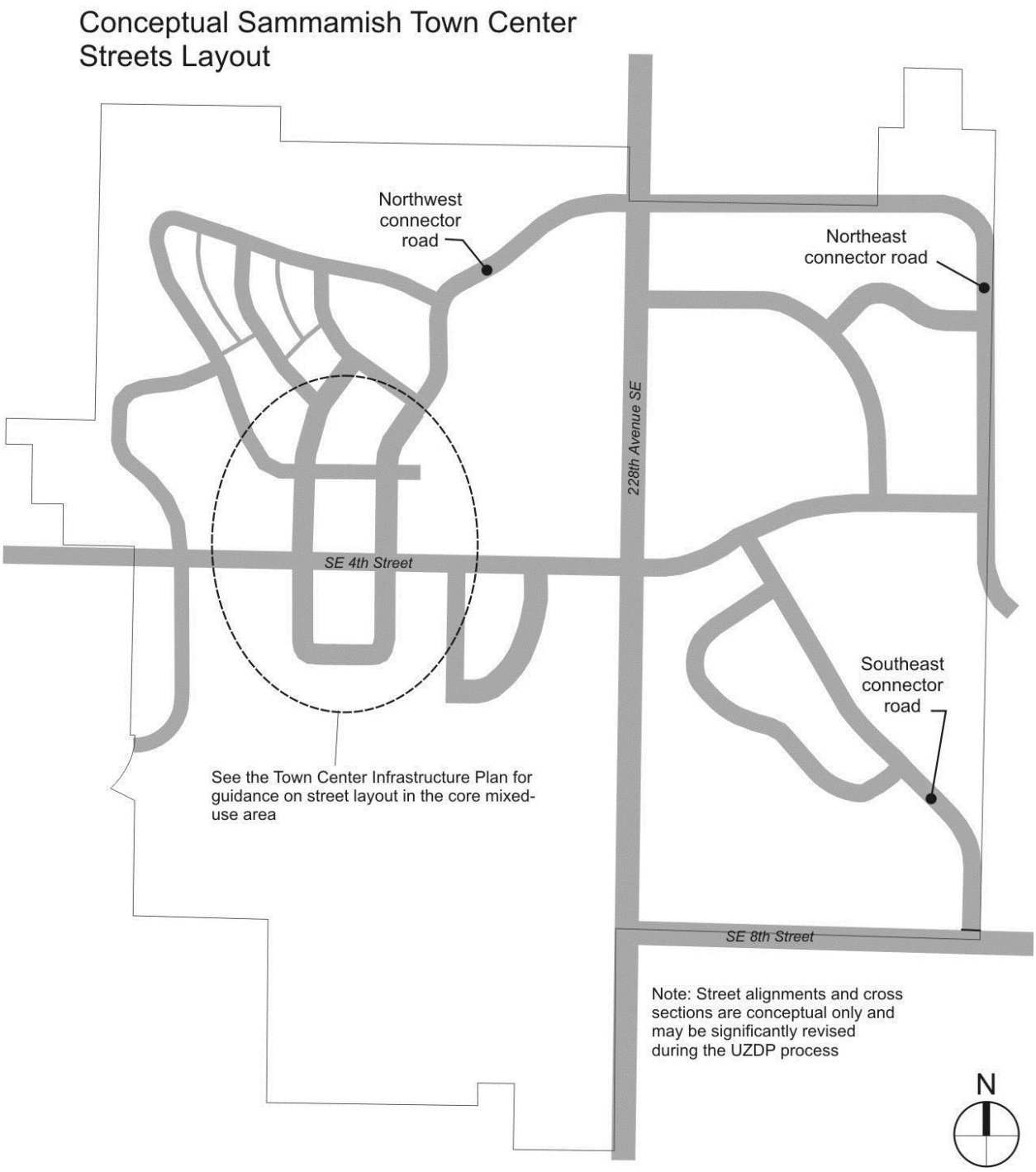

Figure 21B.30.040a. A desirable configuration of connected public and private streets and alleys in the Town Center. Also see the Town Center Infrastructure Plan for more guidance on the street layout for the areas west of 228th Avenue SE.

(Ord. O2010-293 § 1 (Att. A § 21B.30.110))

21B.30.050 Site planning – Multiple building/large lot/multiple lot developments.
(1) Large Lots with Multiple Buildings. All development permit applications for sites over two acres or with multiple buildings, except for single-family development, shall demonstrate that the project is based on a unifying site planning concept that meets the following criteria:

(a) Incorporates open space and landscaping as a unifying element;

(b) Where possible, incorporates screening, environmental mitigation, utilities, and drainage as positive elements (ex: create a "natural" open space or wet pond as a site feature to accommodate surface water runoff);

(c) Provides pedestrian paths or walkways connecting all businesses and the entries of multiple buildings;

(d) Incorporates low impact development measures and stormwater management systems as part of the site plan, ~~if~~ unless infeasible. Participating in a multi-property stormwater facility or system will also satisfy this requirement; and

Figure 21B.30.050a. Example of an attractive stormwater pond used as a site amenity.

(e) Building entrances shall not be focused around a central parking lot but be connected by a sidewalk/pathway system and/or open space(s).

The director may waive or modify this standard if it has been addressed within an adopted unified zone development plan.

Figure 21B.30.050b. The Juanita Village site plan exemplifying objectives for multiple building large lot development.

(Ord. O2010-293 § 1 (Att. A § 21B.30.120))

21B.30.070 Site planning – Internal vehicular circulation.
(1) Vehicular Circulation. Developments shall provide a safe and convenient network of vehicular circulation that connects to the surrounding road/access network and provides opportunities for future connections to adjacent parcels, where applicable.

(2) Internal Access Roads. Interior access roads in multi-building commercial or multifamily developments shall look and function more like public streets. This includes planting strips and street trees or bioretention on both sides, sidewalks on one or both sides, and perpendicular parking on one or both sides. The use of these features will be determined for developments in the TC-A zones through the unified zone development planning process (see Chapter 21B.95 SMC), depending on the size and configuration of the development and nature of uses and the circulation system. The director may approve innovative and special street designs, such as a woonerf people street, provided pedestrian safety and other street functions are achieved.

(3) Driveway Standards and Guidelines for All Nonresidential and Multifamily Development.

(a) Driveways to surface parking lots are prohibited on pedestrian-oriented streets, unless there are no alternatives, as determined in the unified zone development planning process;

(b) Driveways shall be restricted to no more than one entrance and exit lane per 300 lineal feet (lf) of frontage. Properties with less than 300 lineal feet of frontage shall be restricted to one entrance and exit lane for vehicular access. For corner properties, the separate street frontages shall be measured separately unless both streets are classified as an arterial or collector;

(c) Vehicular access to corner lots shall be located on the lowest classified roadway and as close as practical to the property line most distant from the intersection;

(d) Driveway widths shall be minimized per the director to reduce pedestrian conflicts. Driveway lanes shall be no wider than 11 feet per entry or exit lane unless the director determines wider lanes are appropriate for the use and that the design does not significantly impact vehicular circulation, stormwater runoff, public safety, pedestrian movement, or visual qualities; and

(e) All dedicated truck loading zones and service areas for commercial businesses, except for on-street loading zones and businesses under 20,000 square feet that use parking spaces for incidental deliveries, shall be in the back of the building and shall not face a pedestrian or residential street. For related standards on loading zones, see SMC 21B.40.070. (Ord. O2010-293 § 1 (Att. A § 21B.30.140))

21B.30.160 Site design elements – Open space design.

(1) General Requirements for All "Common," "Pedestrian-Oriented" and "Public Open Space" Open Space Design Criteria. The design of all "common," "pedestrian-oriented" and "public open space" required per SMC 21B.30.090 shall meet the following design criteria to the director's satisfaction:

(a) All open spaces shall be physically and visually accessible from the adjacent street or major internal pedestrian route. Open spaces shall be in locations that the intended user(s) can easily access and use, rather than simply left-over or undevelopable space in locations where very little pedestrian traffic is anticipated;

(b) The grade and configuration of the open space shall be suitable to recreational activities (e.g., locate play areas on relatively level ground and picnic areas in sunny locations);

(c) The open space shall feature amenities and activities that encourage pedestrians to use the space. Spaces larger than 2,500 square feet should include a combination of active and/or passive recreational uses that attracts a variety of people. "Active" features could include, for example, a trail, sports court, or children's play area. "Passive" features could include an informal garden, fountain, sculpture, nature viewing area, picnic area, or seating. No use shall be allowed within the open space that adversely affects the aesthetic appeal or usability of the open space;

(d) Project applicants shall demonstrate how the space incorporates crime prevention through environmental design (CPTED) principles, including:

(i) Natural surveillance, which occurs when parks or plazas are open to view by the public and neighbors. For example, a plaza that features residential units with windows looking down on space means that the space has good "eyes" on the park or plaza;

(ii) Lighting levels according to SMC 21B.30.190 or as noted in this section;

(iii) Landscaping and Fencing. Avoid configurations that create dangerous hiding spaces and entrapment conditions;

(iv) Entrances should be prominent, well lit, and highly visible from inside and outside of the space;

(v) Maintenance. Open spaces shall utilize commercial grade materials that will last and require minimal maintenance costs. Walls, where necessary, shall be designed and treated to deter graffiti. Use and maintain landscape materials that reduce maintenance cost and maintain visibility, where desired, although some maintenance for landscaping is expected;

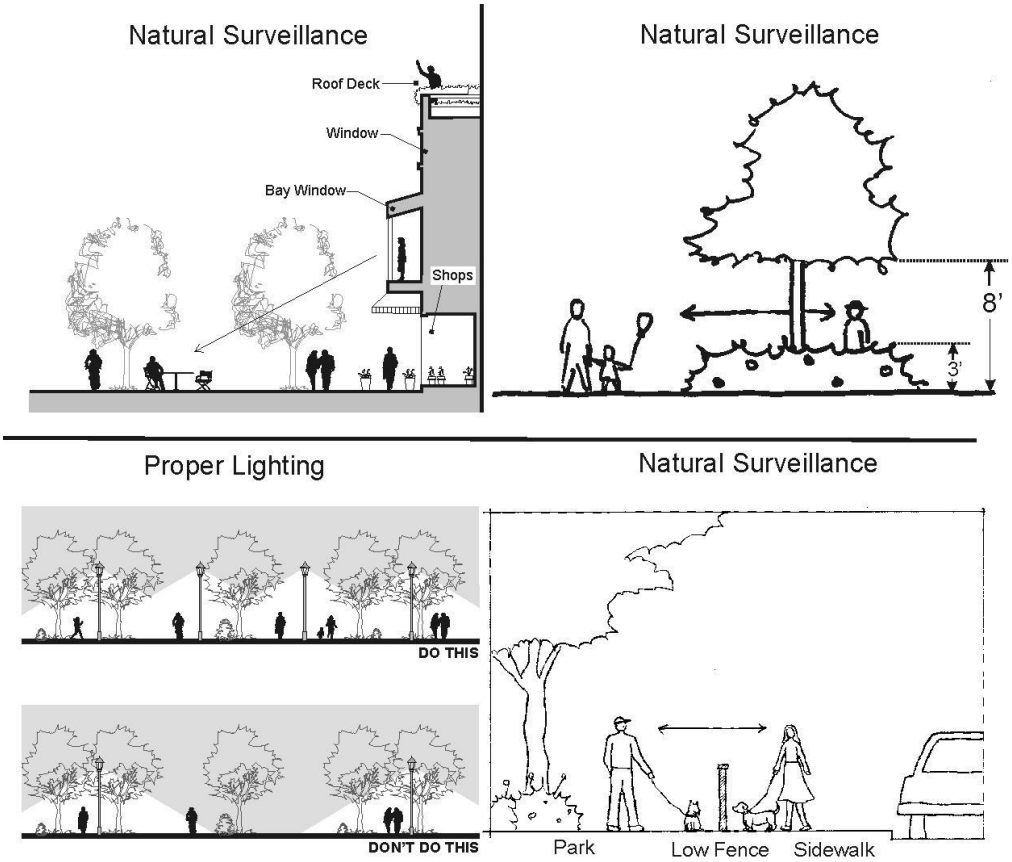

Figure 21B.30.160a Illustrating CPTED principles.

(e) Covered open space, such as a picnic shelter or covered sports court, is encouraged;

(f) Landscape elements shall also serve as a stormwater quality improvement function and as rain gardens. See SMC 21B.30.100(4) and Chapter 21B.35 SMC;

(g) In order to qualify as part of required open space, including multifamily open space, an open space shall conform to the Americans with Disabilities Act (ADA); and

(h) Existing trees and significant vegetation shall be maintained in open space areas unless an alternate landscaping plan for such areas is required or approved or unless planned active

recreational activities would conflict with existing vegetation. In case of conflicts with planned activities, the design should strike a balance, as determined by the director, where it maximizes active recreation opportunities while trying to maintain the most important stands of trees and vegetation.

(2) Pedestrian-Oriented Open Space Design Criteria. These spaces, as required per SMC 21B.30.090, are intended to be publicly accessible spaces that enliven the pedestrian environment by providing (1) opportunities for outdoor dining, socializing, and relaxing and (2) visual amenities that contribute to the unique character of the Town Center. Design criteria for pedestrian open space:

(a) Sidewalk area, where widened beyond minimum requirements, shall count as pedestrian-oriented open space. The additional sidewalk area may be used for outdoor dining and temporary display of retail goods. The standards in subsections (2)(b) and (c) of this section shall not apply to sidewalks, where used as usable open space;

(b) The following design elements are required for pedestrian-oriented open space:

(i) Pedestrian access to the abutting structures from the street, private drive, or a nonvehicular courtyard;

(ii) Paved walking surfaces of either concrete, porous concrete or approved unit paving;

(iii) Pedestrian-scaled lighting (no more than 14 feet in height) at a level averaging at least two foot-candles throughout the space. Lighting may be on site or building-mounted lighting;

(iv) At least three feet of seating area (bench, ledge, etc.) or one individual seat per 60 square feet of plaza area or open space. This provision may be relaxed or waived where there are provisions for movable seating that meet the intent of the standard as determined by the director;

(v) Spaces shall be positioned in areas with significant pedestrian traffic to provide interest and security – such as adjacent to a building entry; and

(vi) Landscaping that adds visual or seasonal interest to the space;

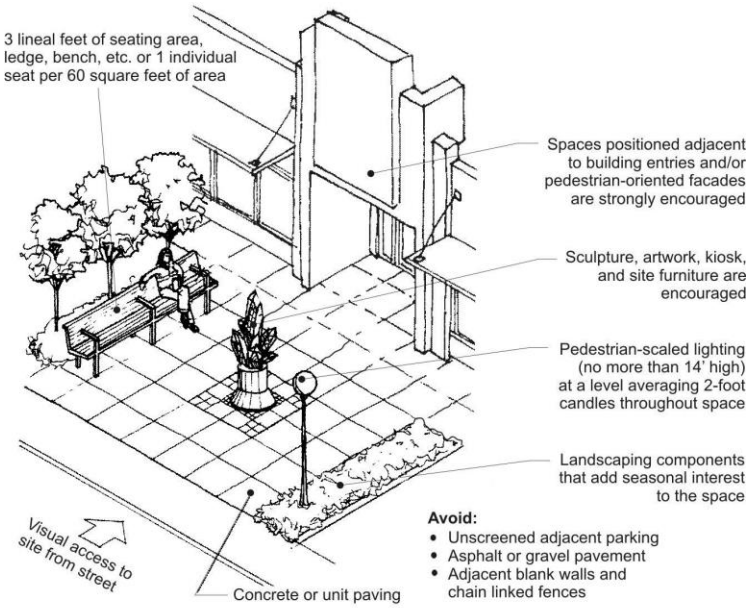

Figure 21B.30.160b. Illustration of key pedestrian-oriented open space standards.

(c) The following features are encouraged in pedestrian-oriented space:

(i) Pedestrian amenities such as a water feature, drinking fountain, and/or distinctive paving or artwork;

(ii) Provide pedestrian-oriented facades on some or all buildings facing the space;

(iii) Consideration of the sun angle at noon and the wind pattern in the design of the space;

(iv) Transitional zones along building edges to allow for outdoor eating areas and a planted buffer;

(v) Movable seating;

(vi) Incorporation of water treatment features such as rain gardens or the use of an area over a vault as a pedestrian-oriented space; and

(vii) Weather protection, especially weather protection that can be moved or altered to accommodate conditions; and

(d) The following features are prohibited within pedestrian-oriented space:

(i) Asphalt or gravel pavement, except where continuous gravel or asphalt paths intersect with the space;

(ii) Adjacent chain link fences;

(iii) Adjacent blank walls; and

(iv) Adjacent dumpsters or service areas.

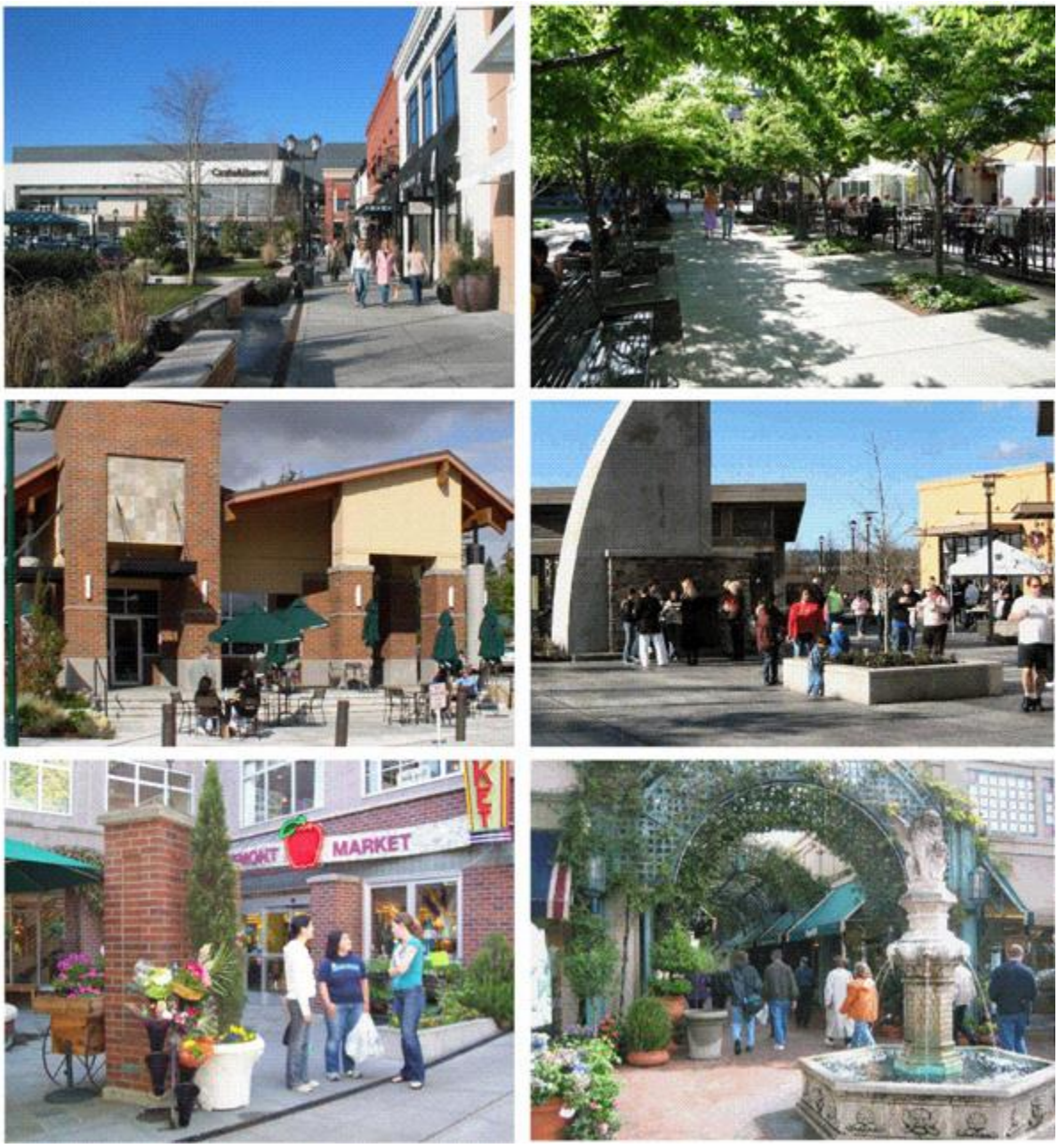

Figure 21B.30.160c. Examples of pedestrian-oriented open space. Clockwise from upper left: University Village (Seattle, WA), Pearl District (Portland, OR), Kent Station (Kent, WA), Walnut Creek (CA), Fremont (Seattle, WA), and Mill Creek Town Center (Mill Creek, WA).

(3) Multifamily Open Space Design Criteria.

(a) Common open space includes landscaped courtyards or decks, front porches, gardens with pathways, children's play areas, or other multi-purpose recreational and/or green spaces. Special requirements and recommendations for common open spaces include the following:

(i) Required setback areas shall not count towards the open space requirement unless they are portions of a space that meets the dimensional and design requirements and guidelines herein as determined by the director;

(ii) Space shall be large enough to provide functional leisure or recreational activity. To meet this requirement, no dimension shall be less than 15 feet in width (except for front porches);

(iii) Spaces (particularly children's play areas) shall be visible from at least some dwelling units and positioned near pedestrian activity;

(iv) Spaces shall feature paths, landscaping, seating, lighting and other pedestrian amenities to make the area more functional and enjoyable;

(v) Individual entries may be provided onto common open space from adjacent ground floor residential units, where applicable. Small, semi-private open spaces for adjacent ground floor units that maintain visual access to the common area are strongly encouraged to enliven the space. Low walls or hedges (less than three feet in height) are encouraged to provide clear definition of semi-private and common spaces;

(vi) Separate common space from ground floor windows, automobile circulation, service areas and parking lots with landscaping, low-level fencing, and/or other treatments as approved by the director that enhance safety and privacy (both for common open space and dwelling units);

(vii) Space should be oriented to receive sunlight, facing east, west, or (preferably) south, when possible;

(viii) Stairways, stair landings, above grade walkways, balconies and decks shall not encroach into the minimum required common open space areas. An atrium roof covering may be built over a courtyard to provide weather protection provided it does not obstruct natural light inside the courtyard. Front porches are an exception; and

(ix) Unenclosed front porches qualify as common open space provided:

(A) No dimension is less than eight feet; and

(B) The porches are accessible to all residents.

Figure 21B.30.160d. Good examples of common open space. Clockwise from upper left: Vancouver (WA), Redmond (WA), unknown, and Redmond (WA)

Figure 21B.30.160e. This courtyard is too narrow to function as usable open space, particularly given the height of the building.

(b) Private Balconies and Decks. To qualify as open space meeting the requirements of SMC 21B.30.090, such spaces shall be at least 35 square feet, with no dimension less than four feet, to provide a space usable for human activity. The space shall meet ADA standards. This standard also applies to individual front porches if counted toward townhouse open space requirements.

(c) Shared Rooftop Decks. To qualify as open space meeting the requirements of SMC 21B.30.090, such spaces shall meet the following requirements:

(i) Space shall be ADA accessible to all dwelling units;

(ii) Space shall provide amenities such as seating areas, landscaping, and/or other features that encourage use as determined by the director;

(iii) Space shall feature hard surfacing appropriate to encourage resident use; and

(iv) Space shall incorporate features that provide for the safety of residents, such as enclosures and appropriate lighting levels.

Figure 21B.30.160f. Balconies and roof decks: Examples of what can and cannot be considered open space.

(d) Indoor Recreational Areas. To qualify as open space meeting the requirements of SMC 21B.30.090, such spaces shall meet the following conditions:

(i) The space shall meet ADA standards and shall be located in a visible area, such as near an entrance, lobby, or high traffic corridors; and

(ii) Space shall be designed specifically to serve interior recreational functions and not merely be leftover unrentable space used to meet the open space requirement. Such space shall include amenities and design elements that will encourage use by residents as determined by the director.

(4) Children Play Area Safety Requirements. All children play area apparatus shall meet Consumer Product Safety Standards for equipment, soft surfacing and spacing, and shall be located in an area that is:

(a) At least 400 square feet in size with no dimension less than 20 feet; and

(b) Adjacent to main pedestrian paths or near building entrances. (Ord. O2010-293 § 1 (Att. A § 21B.30.240))

21B.30.170 Site design elements – Trail corridors.
Trails, as required in SMC 21B.30.060, shall be provided within easements, or tracts, of sufficient width and length consistent with the dimensional standards as defined below.

Proposed public and private trails shall be reviewed by the director for consistency with the following standards:

(1) Trails Master Plan. The Sammamish Trails, Bikeways, and Paths Master Plan provides design standards for the full range of trails and pedestrian routes desired within the City. This document shall be used as a guide to help determine the type of trail to be constructed in specific locations of the Town Center depending on the terrain, environmental conditions, adjacent uses, connectivity, and anticipated usage. Trails shall be constructed per design standards set forth in the Trails, Bikeways, and Paths Master Plan.

(2) Use of Existing Corridors. To the extent practical in implementing the conceptual Town Center Trails Plan as shown in Figure 21B.30.060a, trails should generally be located to minimize the need to remove additional vegetation and create other associated impacts. If sensitive areas exist on or in proximity to an existing cleared or improved corridor, then impacts from constructing the trail shall be mitigated consistent with Chapter 21A.50 SMC, including the recommendations from any required sensitive areas study. Trails may be located in other areas if it is demonstrated that a new corridor creates less overall or less incremental impact to sensitive areas and habitat while still achieving overall project goals and objectives.

(3) Compatibility with Adjacent Land Uses. Trails should be designed and constructed to encourage users to remain on the trail, to diminish the likelihood of trespass and to promote privacy for adjacent landowners. The project applicant shall propose for the department's review and approval the use of fencing, signage, landscaping or other appropriate means to accomplish this requirement. Any proposed lighting should be directed away from houses along the trail corridor. Ground-level lighting, such as bollards, is preferred. Safety of trail users and adjacent landowners shall be addressed through review of vehicle access and crossing locations and design.

(4) Width. The width of the cleared area, trail corridor, surface and shoulder should be designed consistent with AASHTO standards for public multi-use paved trails (Guide for the Development of Bicycle Facilities, 1999, as amended, American Association of State Highway and Transportation Officials), and with U.S. Forest Service standards (Trails Management Handbook, 1991, as amended, and Standard Specifications for Construction of Trails Handbook, 1984, as amended) if unpaved. Cleared areas shall be the minimum necessary consistent with the standards and requirements in the SMC.

(5) Sensitive Areas and Buffers. Trail impacts to sensitive areas should be reviewed consistent with the impact avoidance and mitigation sequencing requirements of Chapter 21A.50 SMC. Mitigation of impacts is required, even for trails located on existing corridors consistent with subsection (2) of this section. Wetland and stream buffers shall be expanded to compensate for the total area of the trail corridor, including all disturbed areas located within the buffer area. No expansion shall be required for trails located on existing improved corridors, including but not limited to utility corridors, road or railroad rights-of-way, within wetland or stream buffers. Mitigation shall be required for all impacts consistent with Chapter 21A.50 SMC.

(6) Location. Except for approved viewing platforms, spur trails, wetland or stream crossings proposed consistent with Chapter 21A.50 SMC, or trails located on existing corridors consistent with subsection (2) of this section, trails that are proposed in proximity to wetlands or streams or associated buffers may only be located in the outer 25 percent of the wetland or stream buffer and should be generally aligned parallel to the stream or perimeter of the wetland. Spur trails and viewing structures should be designed to minimize impacts on sensitive area and wildlife habitat. Viewing platforms shall be placed landward of the wetland or stream edge.

(7) Wildlife. Trails should be designed and constructed to encourage users to remain on the trail through the use of fencing, signage, landscaping or other appropriate means to minimize impacts to wildlife and habitat. In addition to the requirements related to wildlife corridors elsewhere in the SMC, trail location, lighting, construction decisions, and requirements for use (e.g., pet leash requirements, bicycle speed limits, etc.) should be guided by recommendations from sensitive areas studies to avoid, minimize and mitigate impacts to habitat for sensitive species. In a vegetation management plan developed for City review and approval consistent with SMC 21A.50.160, all disturbed areas shall be landscaped with appropriate native vegetation upon completion of trail construction or as soon thereafter as possible. The trail maintenance entity shall ensure that such vegetation survives through an appropriate mechanism. An integrated vegetation and pest management plan shall be developed by the applicant and approved by the department that avoids or minimizes the use of pesticides, herbicides and other hazardous substances.

(8) Surfacing. The director will determine pavement options for the specific trail section. To promote infiltration and groundwater recharge and to minimize slope instability, trail surfaces shall be made of pervious materials unless infeasible. ~~Impervious paving may be used where the director determines that pervious pavements are ineffective or inappropriate due to soil conditions. However, pervious paving or other low impact techniques that meet overall project goals for cost and durability are encouraged.~~ Boardwalks may be used for areas subject to regular inundation, and should be constructed with nonhazardous materials. Impervious materials may also be used if necessary for soil stabilization or to prevent soil erosion, or if the trail is specifically designed and intended to be accessible to physically challenged persons and is identified as such in the City's adopted Comprehensive Plan, parks plan or trails plan.

(9) Maintenance. Maintenance of any trail corridor or improvements, retained in private ownership, shall be the responsibility of the owner or other separate entity capable of long-term maintenance and operation in a manner acceptable to the City. (Ord. O2010-293 § 1 (Att. A § 21B.30.250))

Attachment K

Chapter 21B.35

DEVELOPMENT STANDARDS – LANDSCAPING AND IRRIGATION

Sections:
[…]
21B.25.040 Provisions to obtain additional (bonus) residential density or commercial development capacity.
[…]

[…]

21B.35.220 Tree replacement and enforcement.
This section shall apply in addition to the provisions of SMC Title 23, Code Enforcement.

(1) Any tree removed in violation of SMC 21B.35.200, Tree retention requirements, or any tree removed pursuant to the exception process of SMC 21B.35.200(7) shall be subject to the following replacement requirements:

(a) Coniferous trees shall be replaced by coniferous trees native to Washington. ~~and deciduous~~ Deciduous trees shall be replaced with a mixture of native coniferous trees and deciduous trees at a ratio of 2 coniferous trees to every one deciduous tree per the replacement ratios below~~by deciduous trees native to Washington~~;

(b) Replacement coniferous trees shall be at least eight feet in height. Replacement deciduous trees shall be at least one and one-half inches in diameter (DBH); and

(c) Trees shall be replaced subject to the following replacement ratios:

(i) Removed trees with a DBH greater than nine inches up to 12 inches shall be replaced by four trees;

(ii) Removed trees with a DBH greater than 12 inches up to 16 inches shall be replaced by six trees; and

(iii) Removed trees with a DBH of 16 inches or more shall be replaced by eight trees.

(2) Financial guarantees for replacement trees may be required consistent with the provisions of SMC Title 27A.

(3) At the discretion of the director, each tree removed in violation of this chapter may be considered a separate code enforcement case for the purposes of SMC Title 23, Code Enforcement. (Ord. O2010-293 § 1 (Att. A § 21B.35.240))

Attachment L

Chapter 21B.85

DEVELOPMENT STANDARDS – INTERIM STORWMATER STANDARDS

Sections:

21B.85.010 Purpose and intent.

21B.85.020 Applicability.

21B.85.030 Town Center interim stormwater standards adopted.

21B.85.040 Review and appeal.

21B.85.010 Purpose and intent.

Low impact development (LID) is an approach to land use planning and project design that seeks to:

(1) Increase the ability of a developed site to effectively emulate predevelopment hydrologic conditions, including, without limitation, stormwater retention, water quality treatment, and infiltration functions;

(2) Minimize overland stormwater runoff from a developed site;

(3) Maximize the retention of trees, native vegetation, understory plants, and native soils;

(4) Minimize soil disturbance;

(5) Minimize the conversion of site surfaces from vegetated to nonvegetated surfaces; and

(6) Maximize the quantity and use of appropriate native plants on site.

The purpose of this chapter is to require that development proposals within the Town Center sub-area fully incorporate the interim stormwater standards and low impact development into all aspects of project design. (Ord. O2010-293 § 1 (Att. A))

21B.85.020 Applicability.

(1) The provisions of this chapter shall apply to all land uses in the City of Sammamish Town Center zones, and all persons within the Town Center shall comply with the requirements of this chapter.

(2) The City shall not approve any permit or otherwise issue any authorization to alter the condition of any land, water or vegetation or to construct or alter any structure or improvement without first assuring compliance with the requirements of this chapter.

(3) Approval of a development proposal pursuant to the provisions of this chapter does not discharge the obligation of the applicant to comply with the provisions of this chapter. (Ord. O2010-293 § 1 (Att. A))

21B.85.030 Town Center stormwater standards adopted.

(1) Stormwater standards in the Town Center shall be in accordance to the adopted Surface Water Design Manual and Sammamish Addendum.

(2) The City is hereby authorized, subject to the review provisions of SMC 21B.85.040, to modify the stormwater requirements, standards, and specifications. (Ord. O2010-293 § 1 (Att. A))

21B.85.040 Review and appeal.

(1) Process. The use of the stormwater standards and specifications, along with applicable low impact development design, shall be reviewed concurrently with a primary proposal to consider the proposed site plan and methods used to earn the incentives as follows:

(a) For the purpose of this section, a “primary proposal” is defined as a proposed unified zone development plan, subdivision, binding site plan, conditional use permit, or commercial site development permit;

(b) The applicant shall identify the primary proposal’s low impact development improvements at the time of application;

(c) When the primary proposal requires a public hearing under this title or SMC Title 19A or 20, the public hearing on the primary proposal shall serve as the hearing on the stormwater standards and specifications and applicable low impact development improvements proposed, and the reviewing authority shall make a consolidated decision on the proposed development;

(d) When the primary proposal does not require a public hearing under this title or SMC Title 19A or 20, the stormwater standards and specifications, and applicable low impact development improvements, shall be subject to the decision criteria for conditional use permits outlined in Chapter 21A.100 SMC and to the procedures set forth in SMC Title 20;

(2) Review. In evaluating a primary proposal and associated stormwater standards and specifications, and applicable low impact development improvements, the City shall have the authority to request additional technical information prepared by a certified professional to:

(a) Determine whether the development proposal is consistent with this chapter;

(b) Determine if a proposed approach is consistent with the standards of the King County Surface Water Design Manual, City of Sammamish Stormwater Comprehensive Plan, or the Low Impact Development Technical Guidance Manual for Puget Sound, or other suitable reference, as determined by the director;

(c) Determine whether the proposed combination of techniques adequately work together toward meeting the goals of this chapter;

(d) Determine if the monitoring plans and bonding measures proposed by the applicant are sufficient to protect the public benefit, health, safety, and welfare, consistent with this chapter; and

(e) Determine that the proposed LID approaches shall function as intended.

(3) Health and Safety. Approval of all proposed stormwater design and required low impact development improvements shall be subject to the review of the City to determine that the proposed development does not pose an unreasonable threat to the public health, safety, or welfare on or off the development proposal site and is consistent with the general purposes of this chapter and the public interest.

~~(4) Modification or Elimination of Requirements. Compliance with the adopted stormwater standards and specifications, and applicable low impact development improvements, shall be required to the maximum extent practically feasible. The City is authorized to approve the modification or elimination of stormwater standards and/or low impact development improvement requirements, standards, and specifications set forth in Appendix G of the document entitled "Town Center Stormwater Comprehensive Plan" as adopted by Resolution R2010-430 as follows:~~

~~(a) The burden of proving that a proposed modification or waiver of stormwater standards and specifications, or low impact development requirements, meets the criteria enumerated in this section shall be on the applicant. Absence of such proof shall be grounds for denial of the request;~~

~~(b) All requests to modify or eliminate required stormwater standards or specifications, or low impact development improvements, shall be based upon site specific analysis of the feasibility of required improvements, standards and specifications. Such analysis shall include evaluation of site and vicinity~~

~~soils, hydrology, and other factors, as determined by the City, affecting the successful design of the stormwater or low impact development improvements.~~

(c) In approving a modification or waiver to the stormwater standards or specifications, or low impact development improvements, the City may consider the purpose, effectiveness, engineering feasibility, commercial availability of technology, best management practices, safety and cost of the proposal.

(5) Adjustments.

(a) Minor. Minor changes to proposed stormwater standards and specifications or low impact development improvements may be authorized by the City following approval of the primary proposal. Minor changes include, but are not limited to, changes related to improvement sizing, location, and components.

(b) Major. Major changes to proposed stormwater standards or specifications, or low impact development improvements, may not be authorized by the City following approval of the primary proposal. Major changes shall require re-submittal of the land use applications associated with the primary proposal. Major changes include, but are not limited to, elimination of proposed low impact development improvements and changes to site layout that preclude the success of approved low impact development improvements.

(6) Appeals. Any person or agency aggrieved by an act or decision of the City pursuant to this title may appeal said act or decision to the City of Sammamish pursuant to the appeal provisions for the underlying development permit application as contained in Chapter 20.05 SMC. (Ord. O2010-293 § 1 (Att. A))

Exhibit 2

Staff Response to City Council Questions
November 15, 2016 City Council Study Session

1. How is the City dealing with the leaky domestic water supply lines that might enter the stormwater system as groundwater? Should the stormwater facilities be sized to accommodate these flows?

   Stormwater facilities are sized to convey, collect and manage all stormwater that is expected to drain to the facility. Although water distribution system leakage is expected and generally averages around 7-10% of the water in a system, it is difficult to determine where the leaks are occurring (pipe joints, fittings, valves, etc). We anticipate that development of a groundwater seepage strategy as proposed in the Storm and Surface Water Management Comprehensive Plan will help identify possible locations of and propose actions to address groundwater seepages. Seepages could be from leaky water pipes or from natural groundwater interflow.

2. How are you planning to enforce and/or encourage the use of permeable pavement for property owners that are redoing parking lots?

   Resurfacing and general maintenance of parking lots will not require the use of Low Impact Development Best Management Practices such as permeable pavement. If an applicant is reconstructing a parking lot and removes the asphalt to affect the base course, then the applicant would be required to evaluate the feasibility of LID BMPs such as permeable pavement, dispersion, infiltration, or bioretention systems. We will provide materials to developers and the public to educate them on possible options for managing stormwater which will include information on permeable pavement.

3. Would the footprint of a home on a clustered lot be smaller? Is it really an incentive if the home is smaller?

   A clustered development may have a smaller lot size than a non-clustered development due to the goal of retaining portions of the site in their native condition and avoiding development on areas that may be better suited for stormwater management. The City regulates lot coverage as a percentage of the lot size that may be covered by structures. Consequently, the footprint of a home on a smaller lot will be required to be smaller. However, this can still be an incentive for many developers who weigh the costs of traditional stormwater management facilities that may take up quite a bit of space or be expensive to construct.

   There may also be a market for smaller lots/homes and the additional amenities of having green spaces and trails within the preserved natural areas. Given these options, the developer would weigh the incentive of having a few additional homes to sell and the amenities that can come with an LID development against the conventional design and use the approach they find most cost effective. Nothing in the amended LID code requires its use. However, based on feedback the City received from the Technical Stakeholder Committee, the proposed revision to the Low Impact Development chapter would make these incentives more attractive to developers.

4. How many applicants have used the incentives found in the City's Low Impact Development chapter (Chapter 21A.85 SMC)?

   Very few applications have been using the existing Chapter 21A.85 SMC. The stakeholders that were convened during the preparation of the amendments indicated that the existing incentives were not worth the cost or effort to implement the techniques that were required. The stakeholders indicated that awarding a graduated scale of technique points rather than the current all-or-nothing approach, would make the use of the LID site design techniques more attractive. This is the approach that is included in the proposed code amendments.

5. Who performs the Landslide Hazard Drainage Area evaluation? Is the evaluation done by the property owner?

   The Landslide Hazard Drainage Area maps are like other critical areas maps. The City's existing maps depict the approximate location of Landslide Hazard Drainage Areas. Field verification by a qualified professional and reviewed by City staff is paid for by the applicant and is required during the development of a site.

6. The definition of a "high use site" includes the "use, storage or maintenance of a fleet of 25 or more diesel vehicles each weighing over 10 tons." We do not have too many sites like these. Is there a reason that definition distinguishes between diesel and gasoline fueled vehicles?

   This is an existing definition that is not proposed to be amended. The distinction between diesel vehicles and other vehicles is common and is intended to differentiate large diesel vehicles from package vans.

7. I am delighted to see the emphasis on turning stormwater ponds into an amenity like Heritage Hills Park. This park detains stormwater in the winter, but is dry in the summer for recreation use.

   The proposed revisions to the design of stormwater ponds would encourage more facilities such as this.

8. The "typical" subdivision example shown should show street trees to show a more equitable comparison to the LID subdivision example. Please provide a new comparison.

   A new comparison is provided below.

Exhibit 3

100 lots

103 lots using LID Incentives

Exhibit 3

City Council Agenda Bill

Meeting Date: **December 6, 2016** Date Submitted: 11/30/2016

Originating Department: Public Works

Clearances:

- ☑ Attorney
- ☐ Admin Services
- ☑ City Manager
- ☐ Community Development
- ☐ Finance & IT
- ☐ Parks & Recreation
- ☐ Public Safety
- ☑ Public Works

Subject: Public Hearing on the Ordinance Authorizing Use of Condemnation Pursuant to Chapter 8.12 RCW as Required for the SE 4th Street Improvement Project

Action Required: Open the Public Hearing regarding the Ordinance Authorizing Use of Condemnation Pursuant to Chapter 8.12 RCW as Required for the SE 4th Street Improvement Project

Exhibits:

1. Ordinance No. 2017-____, An Ordinance of the City of Sammamish, Declaring Public Use and Necessity for Land and Property to be Condemned as require for SE 4th St Improvement Project, and Authorizing Payment Therefore from the City's Transportation Capital Improvement Fund
2. Exhibit A - Legal Descriptions of Property to Acquire
3. Exhibit B - Aerial image depicting properties impacted by project.
4. Project Vicinity Map

Budget: Not Applicable

Summary Statement: This ordinance authorizes the City to acquire certain easements and other property rights necessary for the construction of the SE 4th Street Improvement project ("the Project") by initiating condemnation proceedings pursuant to Chapter 8.12 RCW. Adoption of this ordinance does not mean that the City will necessarily pursue the condemnation process for the properties listed in the ordinance, but merely allows the condemnation process to proceed if needed.

Background: The SE 4th Street improvements are scheduled to be advertised for construction in May of 2017. The Project requires the City to acquire, use, damage, or improve certain private property as identified in the attached ordinance. City staff have already commenced negotiations with property owners to secure the needed property rights. However, state law also permits the City to acquire these property rights through the power of eminent domain, subject to procedural and notice requirements contained in Chapters 8.12 and 8.25 RCW.

The Public Works Department expects that the City will reach amicable settlements with all, or nearly all, of the property owners through negotiations. In the event that any such property cannot be acquired by negotiation, this ordinance will allow the Project to stay on schedule. Prior to advertisement, the Project

must be certified as clear for construction – meaning that all new right-of-way has been acquired or possessory or access rights have been granted. By having this ordinance in place, the City will be able to move forward with the project while still providing more time to negotiate with property owners. The condemnation process also allows a property owner to have the court establish a compensation amount if they feel it would produce a better settlement.

Financial Impact: None at this time.

Recommended Motion: Open the Public Hearing regarding the Ordinance Authorizing Use of Condemnation Pursuant to Chapter 8.12 RCW as Required for the SE 4th Street Improvement Project.

Exhibit 1

CITY OF SAMMAMISH
WASHINGTON
ORDINANCE No. O2017-___

AN ORDINANCE OF THE CITY OF SAMMAMISH, WASHINGTON, AUTHORIZING USE OF CONDEMNATION PURSUANT TO CHAPTER 8.12 RCW AS REQUIRED FOR THE SE 4TH STREET IMPROVEMENT PROJECT; AND AUTHORIZING PAYMENT THEREFOR FROM THE CITY'S TRANSPORTATION CAPITAL IMPROVEMENT PROGRAM FUND

WHEREAS, the SE 4th Street; 218th Ave SE to 228th Ave SE (SE 4th Street Improvement Project) is a Concurrency Project on the current Six-Year Transportation Capital Improvement Plan; and

WHEREAS, on October 6, 2015, the City Council authorized the City Manager to execute a contract agreement for engineering design and right-of-way acquisition services for construction of the SE 4th Street Improvement Project; and

WHEREAS, the project consists of reconstructing the existing two lane road with inadequate shoulders and sidewalks to form a three lane arterial street with a center median, turning lanes, sidewalks, bicycle lanes, street lighting, and streetscaping; and

WHEREAS, certain land and properties along SE 4th Street from 218th Ave SE to 228th Ave SE must be acquired in order to provide the necessary right-of-way for construction of the project; and

WHEREAS, on-going efforts to acquire the necessary properties by negotiation and agreement are being undertaken by the City and its agents; and

WHEREAS, in the event that negotiated acquisition is not fully successful in advance of the anticipated commencement of construction, it is essential that the City be prepared to initiate condemnation proceedings; and

WHEREAS, payment of just compensation for properties acquired through condemnation and costs of litigation should be made from the City's Transportation Capital Improvement Program (CIP) fund; and

WHEREAS, SE 4th Street is the primary arterial running through the westerly portion of the Town Center Sub-area Plan; and

WHEREAS, the City Council finds that the protection of the public health, safety, and welfare requires that the construction on SE 4th Street be completed as quickly as possible to facilitate the safe movement of traffic, including emergency vehicles; and

WHEREAS, the City has provided notice of the adoption of this Ordinance in the manner set forth in RCW 8.12.005 and 8.25.290;

NOW, THEREFORE, THE CITY COUNCIL OF THE CITY OF SAMMAMISH, WASHINGTON, DO ORDAIN AS FOLLOWS:

Section 1. Declaration of Public Use and Necessity. The SE 4th Street Improvement Project, consisting of road widening and related necessary improvements to the arterial roadway known as SE 4th Street, between 218th Ave SE and 228th Ave SE, is a public use. The improvements will be owned by the City of Sammamish, and open for vehicle, pedestrian, and bicycle travel by members of the public. Acquisition of the properties described and depicted in the attached Exhibits A and B is necessary to construct the SE 4th Street Improvement Project.

Section 2. Authorization to Exercise Power of Eminent Domain. The City Attorney is hereby authorized to commence condemnation proceedings to acquire the properties described in **Exhibit A** and legally depicted in **Exhibit B**, both of which are attached hereto and incorporated herein by this reference, under the power of eminent domain pursuant to Chapter 8.12 RCW. In so doing, the City Attorney is authorized to reasonably adjust the extent of the properties taken, provided that such adjustment shall not be inconsistent with the SE 4th Street Improvement Project.

Section 3. Compensation. Compensation to be paid to the owners of the properties identified in Section 2, above, and costs and expenses of litigation authorized by this Ordinance, shall be paid from the City's Transportation Capital Improvement Program fund (Fund 340).

Section 4. Severability. Should any section, paragraph, sentence, clause or phrase of this Ordinance, or its application to any person or circumstance, be declared unconstitutional or otherwise invalid for any reason, or should any portion of this Ordinance be pre-empted by state or federal law or regulation, such decision or pre-emption shall not affect the validity of the remaining portions of this Ordinance or its application to other persons or circumstances.

Section 5. Effective Date. This Ordinance shall be published in the official newspaper of the City, and shall take effect and be in full force five (5) days after the date of publication.

ADOPTED BY THE CITY COUNCIL AT A REGULAR MEETING THEREOF ON THE _____DAY OF _____, 2017.

CITY OF SAMMAMISH

_____

Mayor Donald J. Gerend

ATTEST/AUTHENTICATED:

_____

Melonie Anderson, City Clerk

Approved as to form:

_____
Michael R. Kenyon, City Attorney

Filed with the City Clerk:	November 30th, 2016
Public Hearing:	December 6th, 2016
First Reading:	December 6th, 2016
Public Hearing:	
Second Reading:	
Passed by the City Council:	
Date of Publication:	
Effective Date:	

Exhibit 2

EXHIBIT A
RIGHT OF WAY ACQUISITION
REFERENCE PARCEL NO. 103

THAT PORTION OF THE SOUTHEAST QUARTER OF THE SOUTHWEST QUARTER OF SECTION 33, TOWNSHIP 25 NORTH, RANGE 6 EAST, W.M., CITY OF SAMMAMISH, KING COUNTY, WASHINGTON, DESCRIBED AS FOLLOWS:

BEGINNING AT THE NORTHWEST CORNER OF THE EAST 150 FEET OF THE WEST 180 FEET OF THE SOUTH 235 FEET OF THE NORTH 265 FEET OF THE NORTHEAST QUARTER OF THE SOUTHEAST QUARTER OF THE SOUTHWEST QUARTER OF SAID SECTION 33;

THENCE S 88°50'03" E, ALONG THE NORTH LINE OF SAID SOUTH 235 FEET, A DISTANCE OF 150.00 FEET;
THENCE S 00°35'39" W, A DISTANCE OF 7.00 FEET;
THENCE N 88°50'03" W, A DISTANCE OF 106.67 FEET TO THE BEGINNING OF A CURVE TO THE WEST HAVING A RADIUS OF 48.50 FEET;
THENCE ALONG THE ARC OF SAID CURVE, THROUGH A CENTRAL ANGLE OF 12°17'50", A DISTANCE OF 10.41 FEET TO THE BEGINNING OF A COMPOUND CURVE TO THE SOUTHWEST HAVING A RADIUS OF 310.00 FEET, THE RADIAL CENTER OF WHICH BEARS S 11°07'53" E;
THENCE ALONG THE ARC OF SAID CURVE, THROUGH A CENTRAL ANGLE OF 03°09'39", A DISTANCE OF 17.10 FEET TO THE BEGINNING OF A COMPOUND CURVE TO THE SOUTHWEST HAVING A RADIUS OF 20.00 FEET, THE RADIAL CENTER OF WHICH BEARS S 14°17'32" E;
THENCE ALONG THE ARC OF SAID CURVE, THROUGH A CENTRAL ANGLE OF 43°52'36", A DISTANCE OF 15.32 FEET TO THE BEGINNING OF A COMPOUND CURVE TO THE SOUTHWEST HAVING A RADIUS OF 83.00 FEET, THE RADIAL CENTER OF WHICH BEARS S 58°10'09" E;
THENCE ALONG THE ARC OF SAID CURVE, THROUGH A CENTRAL ANGLE OF 06°40'11", A DISTANCE OF 9.66 FEET TO THE EASTERLY RIGHT-OF-WAY OF 218TH AVENUE SOUTHEAST, BEING THE WEST LINE OF THE EAST 150 FEET OF THE WEST 180 FEET OF THE SOUTH 235 FEET OF THE NORTH 265 FEET OF THE NORTHEAST QUARTER OF THE SOUTHEAST QUARTER OF THE SOUTHWEST QUARTER OF SAID SECTION 33;
THENCE N 00°51'14" E ALONG SAID EASTERLY RIGHT-OF-WAY AND WEST LINE, A DISTANCE OF 29.87 FEET TO THE **POINT OF BEGINNING**.

CONTAINING 1,289.3 S.F. MORE OR LESS.

November 10, 2016

Exhibit 2

EXHIBIT A

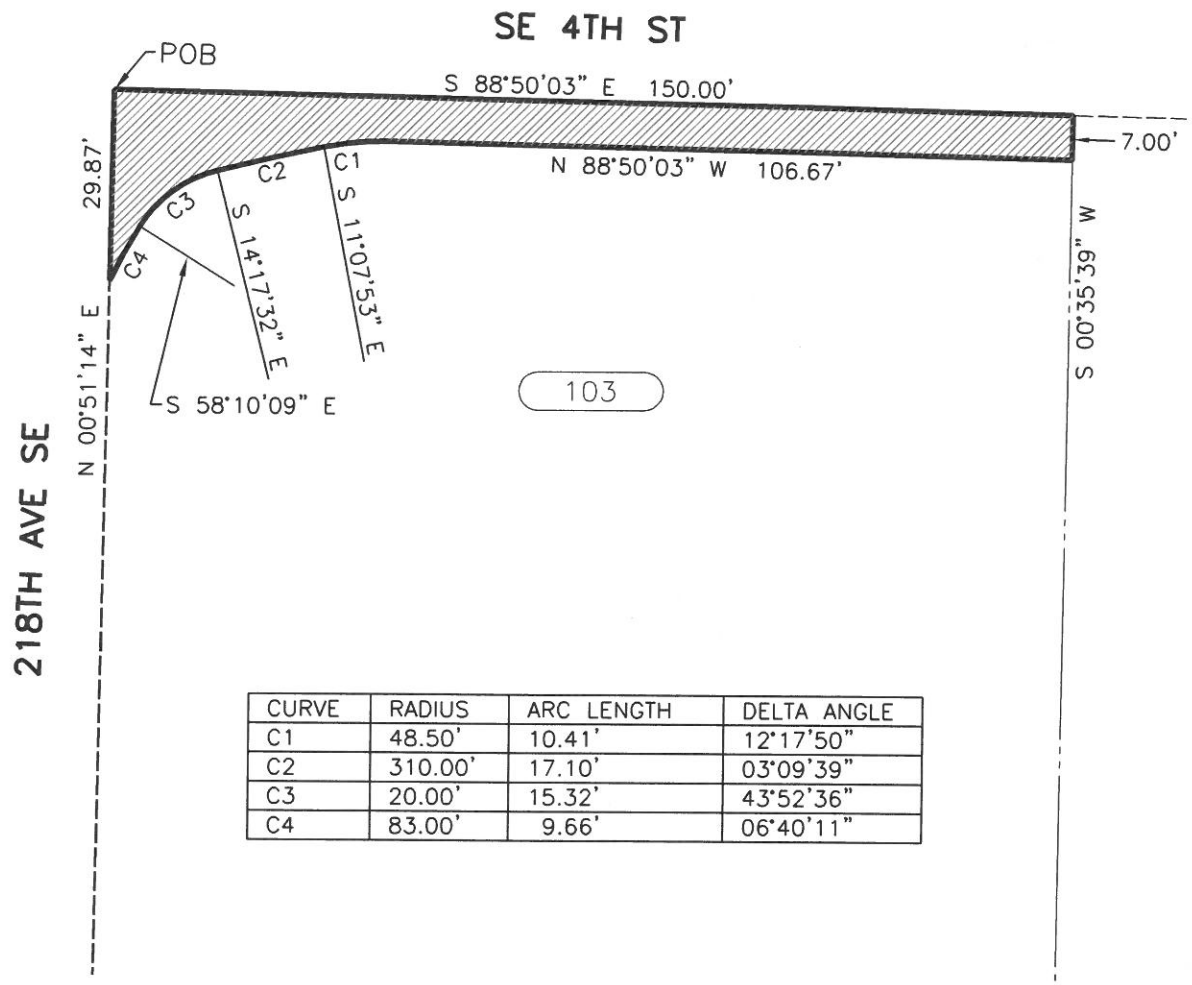

CURVE	RADIUS	ARC LENGTH	DELTA ANGLE
C1	48.50'	10.41'	12°17'50"
C2	310.00'	17.10'	03°09'39"
C3	20.00'	15.32'	43°52'36"
C4	83.00'	9.66'	06°40'11"

PROJECT PARCEL NO.
103
TOTAL AREA (SF±)
35,375.7
FEE ACQUISITION (SF±)
1,289.3
REMAINDER (SF±)
34,086.4
EASEMENT (SF±)
NA

FEE ACQUISITION

30 15 0 30

SCALE IN FEET

FEE ACQUISITION EXHIBIT MAP
of
TAX LOT PARCEL NO. 1240700093

For: City of Sammamish

DATE: NOV. 8, 2016 Sheet 1 of 1

PERTEET
2707 COLBY AVENUE, SUITE 900
EVERETT, WA 98201
425.252.7700 | 800.615.9900

Exhibit 2

EXHIBIT A
RIGHT OF WAY ACQUISITION
REFERENCE PARCEL NO. 104

THAT PORTION OF THE SOUTHEAST QUARTER OF THE SOUTHWEST QUARTER OF SECTION 33, TOWNSHIP 25 NORTH, RANGE 6 EAST, W.M., CITY OF SAMMAMISH, KING COUNTY, WASHINGTON, DESCRIBED AS FOLLOWS:

THE NORTH 7.00 FEET OF THE FOLLOWING DESCRIBED PARCEL:

THE SOUTH 265 FEET OF THE NORTH 295 FEET OF THE NORTHWEST QUARTER OF THE NORTHEAST QUARTER OF THE SOUTHEAST QUARTER OF THE SOUTHWEST QUARTER OF SECTION 33, TOWNSHIP 25 NORTH, RANGE 6 EAST, W.M.;

EXCEPT THE WEST 180 FEET THEREOF.

CONTAINING 1,073.2 S.F. MORE OR LESS.

November 10, 2016

Exhibit 2

EXHIBIT A

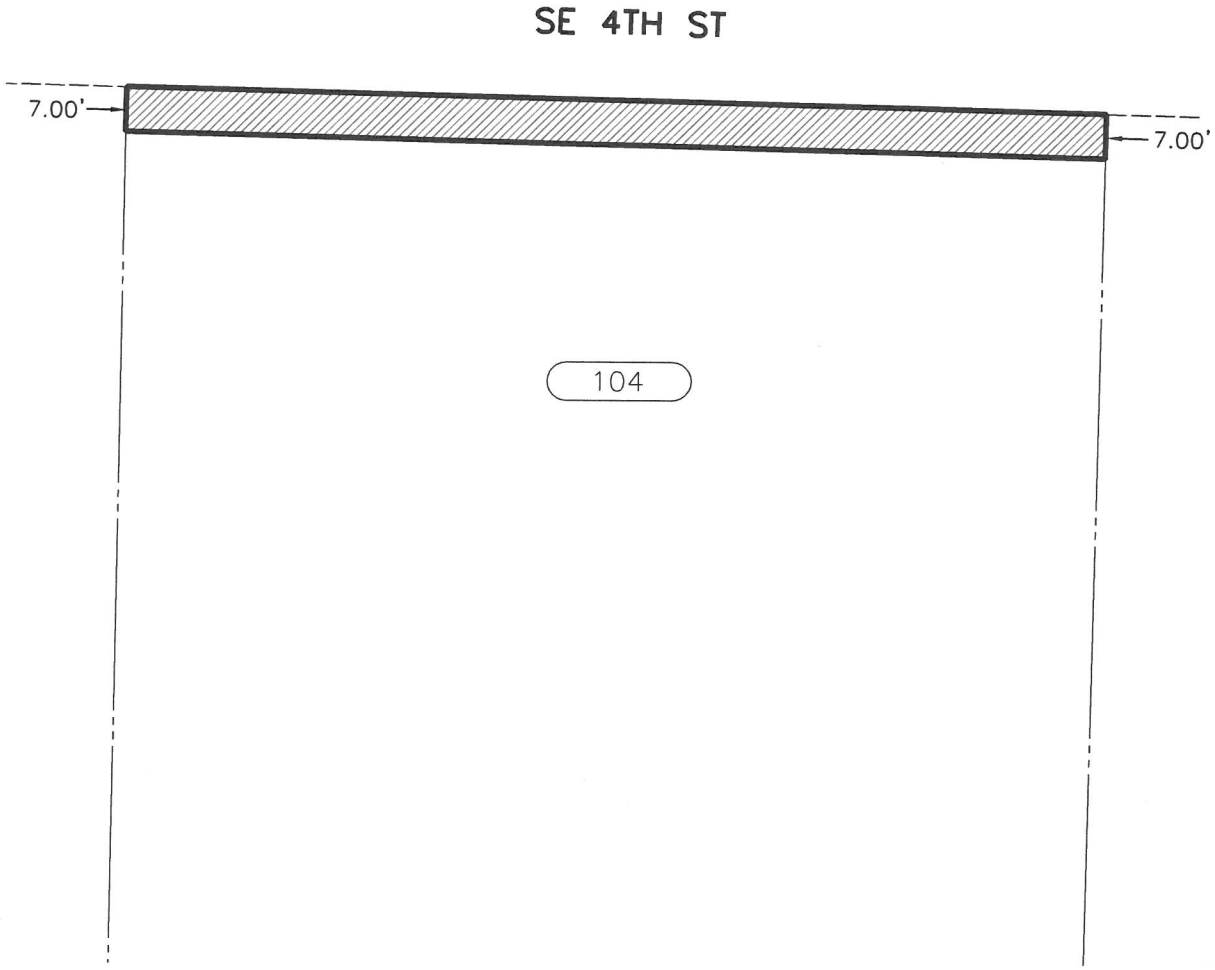

PROJECT PARCEL NO.
104
TOTAL AREA (SF±)
40,463.9
FEE ACQUISITION (SF±)
1,073.2
REMAINDER (SF±)
39,390.7
EASEMENT (SF±)
NA

FEE ACQUISITION

30 15 0 30

SCALE IN FEET

N

FEE ACQUISITION EXHIBIT MAP
of
TAX LOT PARCEL NO. 1240700099

For: City of Sammamish

DATE: NOV. 8, 2016 Sheet 1 of 1

PERTEET
2707 COLBY AVENUE, SUITE 900
EVERETT, WA 98201
425.252.7700 | 800.615.9900

Exhibit 2

EXHIBIT A
RIGHT OF WAY ACQUISITION
REFERENCE PARCEL NO. 105

THAT PORTION OF THE SOUTHEAST QUARTER OF THE SOUTHWEST QUARTER OF SECTION 33, TOWNSHIP 25 NORTH, RANGE 6 EAST, W.M., CITY OF SAMMAMISH, KING COUNTY, WASHINGTON, DESCRIBED AS FOLLOWS:

BEGINNING AT THE SOUTHWEST CORNER OF THE NORTH 30 FEET OF THE NORTHEAST QUARTER OF THE NORTHEAST QUARTER OF THE SOUTHEAST QUARTER OF THE SOUTHWEST QUARTER OF SECTION 33, TOWNSHIP 25 NORTH, RANGE 6 EAST, W.M.;

THENCE S 88°50'03" E, ALONG THE SOUTH LINE OF SAID NORTH 30 FEET, A DISTANCE OF 183.34 FEET;
THENCE S 00°53'28" W, A DISTANCE OF 16.00 FEET;
THENCE N 88°50'03" W, A DISTANCE OF 99.02 FEET;
THENCE N 01°09'57" E, A DISTANCE OF 9.00 FEET;
THENCE N 88°50'03" W, A DISTANCE OF 84.36 FEET TO THE WEST LINE OF SAID NORTH 30 FEET EXTENDED SOUTHERLY;
THENCE N 00°52'21" E, ALONG SAID WEST LINE, A DISTANCE OF 7.00 FEET TO THE **POINT OF BEGINNING**.

CONTAINING 2,174.3 S.F. MORE OR LESS.

November 17, 2016

Exhibit 2

EXHIBIT A

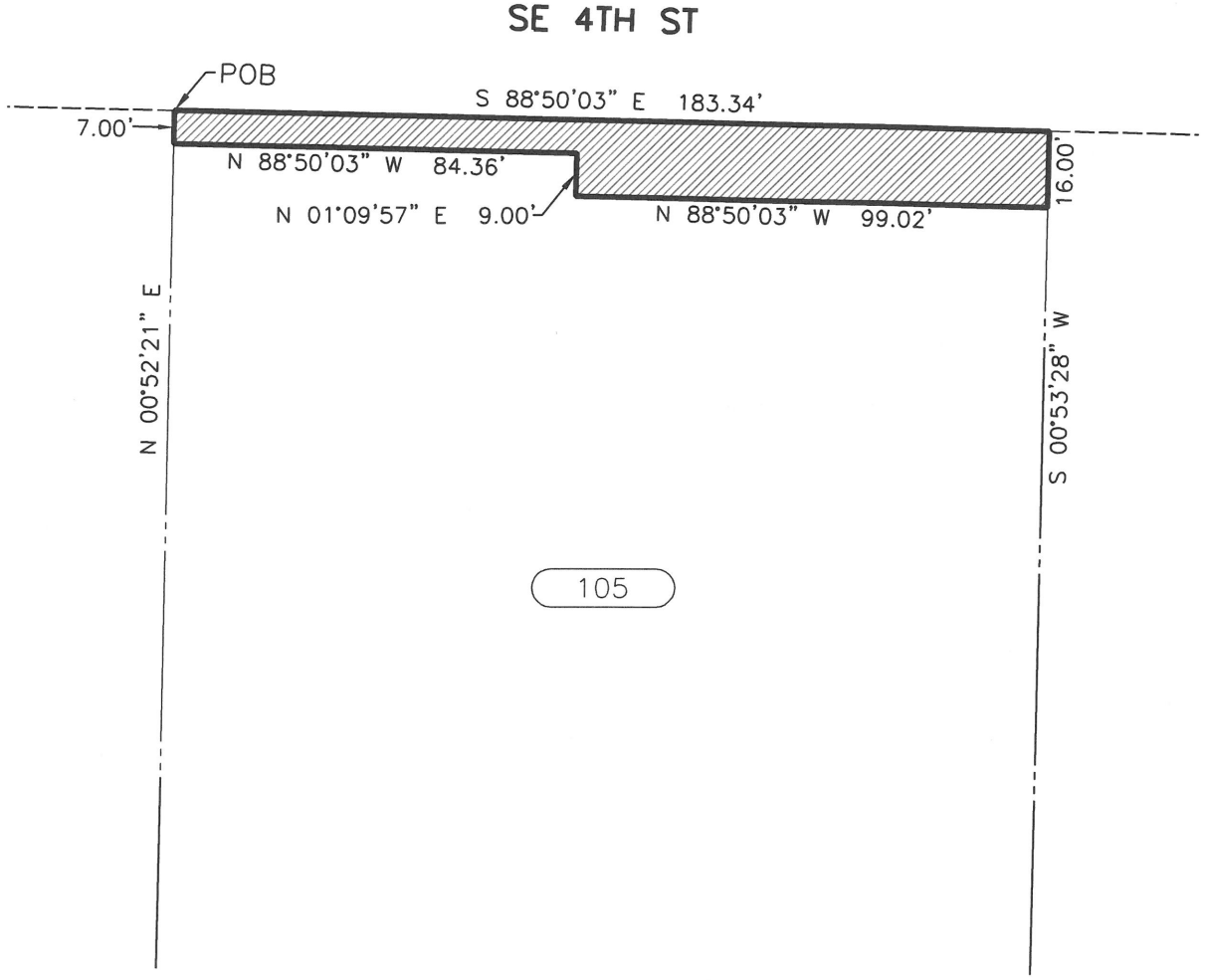

PROJECT PARCEL NO.
105
TOTAL AREA (SF±)
55,820.0
FEE ACQUISITION (SF±)
2,174.3
REMAINDER (SF±)
53,645.7
EASEMENT (SF±)
NA

FEE ACQUISITION

40 20 0 40

SCALE IN FEET

FEE ACQUISITION EXHIBIT MAP
of
TAX LOT PARCEL NO. 1240700097

For: City of Sammamish

DATE: NOV. 9, 2016 Sheet 1 of 1

PERTEET
2707 COLBY AVENUE, SUITE 900
EVERETT, WA 98201
425.252.7700 | 800.615.9900

Exhibit 2

EXHIBIT A
RIGHT OF WAY ACQUISITION
REFERENCE PARCEL NO. 106

THAT PORTION OF THE SOUTHEAST QUARTER OF THE SOUTHWEST QUARTER OF SECTION 33, TOWNSHIP 25 NORTH, RANGE 6 EAST, W.M., CITY OF SAMMAMISH, KING COUNTY, WASHINGTON, DESCRIBED AS FOLLOWS:

BEGINNING AT THE NORTHWEST CORNER OF THE SOUTH 300 FEET OF THE NORTH 330 FEET OF THE EAST 150 FEET OF THE NORTHEAST QUARTER OF THE SOUTHEAST QUARTER OF THE SOUTHWEST QUARTER OF SAID SECTION 33;

THENCE S 88°50'03" E, ALONG THE NORTH LINE OF SAID SOUTH 300 FEET, A DISTANCE OF 149.85 FEET;
THENCE S 00°51'47" W, ALONG THE EAST LINE OF SAID EAST 150 FEET, A DISTANCE OF 7.00 FEET;
THENCE N 88°50'03" W, A DISTANCE OF 63.83 FEET;
THENCE S 01°09'57" W, A DISTANCE OF 9.00 FEET;
THENCE N 88°50'03" W, A DISTANCE OF 85.98 FEET;
THENCE N 00°53'28" E, ALONG THE WEST LINE OF SAID EAST 150 FEET, A DISTANCE OF 16.00 FEET TO THE **POINT OF BEGINNING**.

CONTAINING 1,823.0 S.F. MORE OR LESS.

November 10, 2016

Exhibit 2

EXHIBIT A

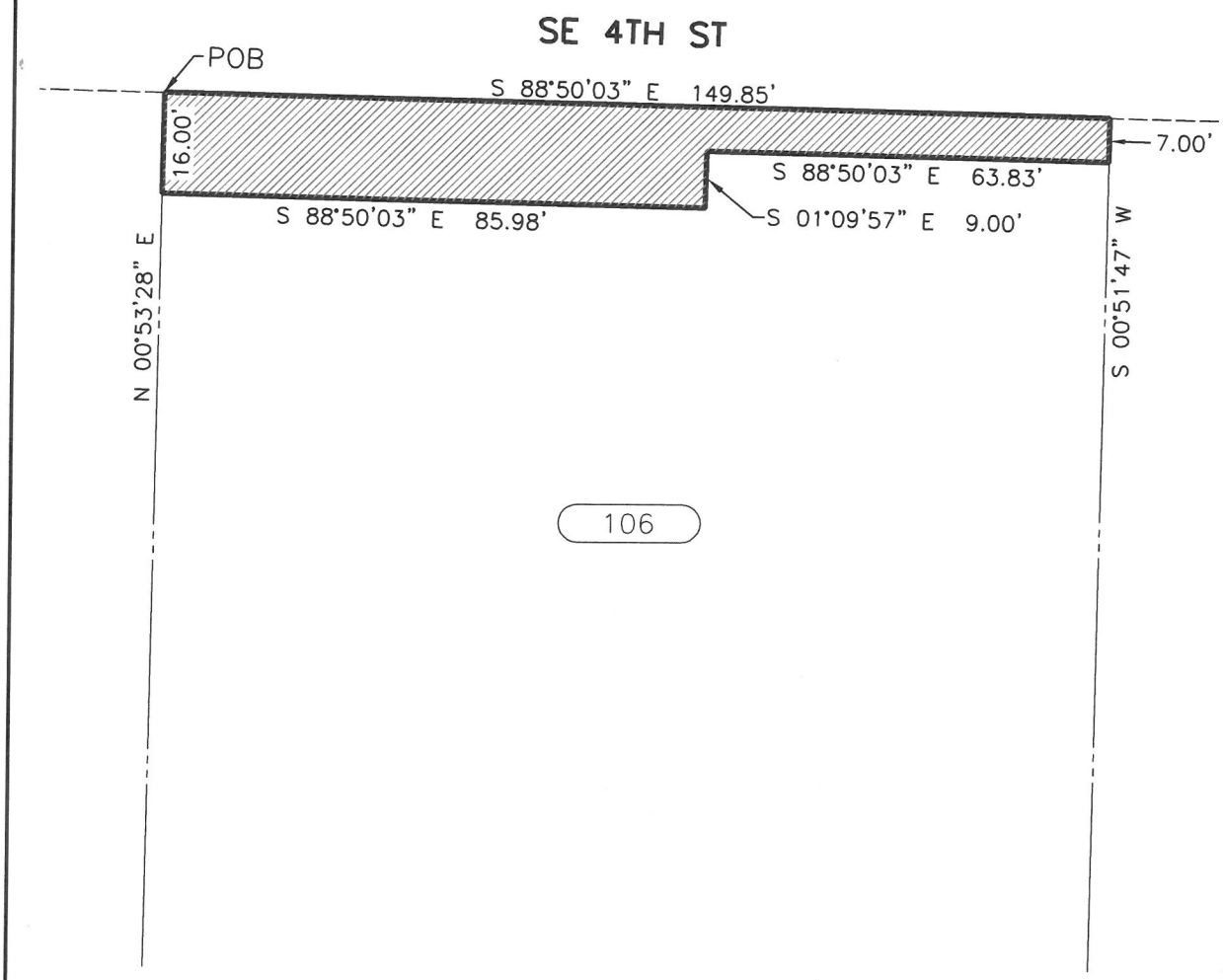

PROJECT PARCEL NO.
106
TOTAL AREA (SF±)
45,695.7
FEE ACQUISITION (SF±)
1,823.0
REMAINDER (SF±)
43,872.7
EASEMENT (SF±)
NA

FEE ACQUISITION

30 15 0 30

SCALE IN FEET

FEE ACQUISITION EXHIBIT MAP
of
TAX LOT PARCEL NO. 1240700096

For: City of Sammamish

DATE: NOV. 8, 2016 Sheet 1 of 1

PERTEET
2707 COLBY AVENUE, SUITE 900
EVERETT, WA 98201
425.252.7700 | 800.615.9900

Exhibit 2

EXHIBIT A
RIGHT OF WAY ACQUISITION
REFERENCE PARCEL NO. 107

THAT PORTION OF THE NORTHWEST QUARTER OF THE SOUTHEAST QUARTER OF SECTION 33, TOWNSHIP 25 NORTH, RANGE 6 EAST, W.M., CITY OF SAMMAMISH, KING COUNTY, WASHINGTON, DESCRIBED AS FOLLOWS:

THE SOUTH 5.00 FEET OF THE FOLLOWING DESCRIBED PARCEL:

THE WEST 330 FEET OF THE NORTHWEST QUARTER OF THE SOUTHEAST QUARTER OF SECTION 33, TOWNSHIP 25 NORTH, RANGE 6 EAST, W.M.
LESS THE NORTH 392 FEET THEREOF;
LESS THE EAST 300 FEET OF THE SOUTH 712 FEET;

(ALSO KNOWN AS LOT C OF BOUNDARY LINE ADJUSTMENT L97L0066, RECORDED ON JUNE 19, 1997 AS RECORDING NUMBER 9706190700, RECORDS OF KING COUNTY, WASHINGTON.)

CONTAINING 150.0 S.F. MORE OR LESS.

November 10, 2016

Exhibit 2

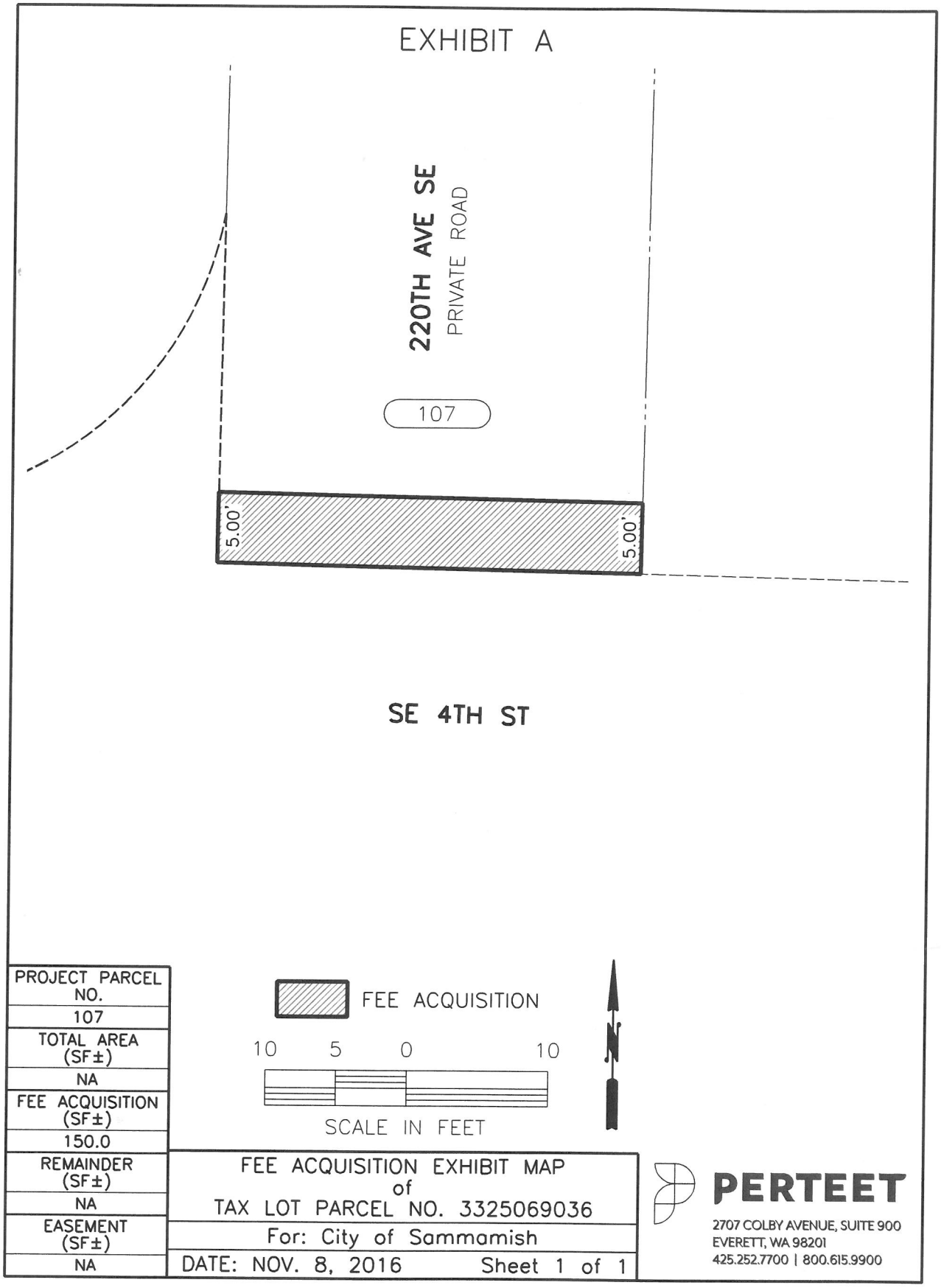
EXHIBIT A
220TH AVE SE
PRIVATE ROAD
107
5.00'
5.00'
SE 4TH ST
FEE ACQUISITION
10 5 0 10
SCALE IN FEET
N
PROJECT PARCEL NO.
107
TOTAL AREA (SF±)
NA
FEE ACQUISITION (SF±)
150.0
REMAINDER (SF±)
NA
EASEMENT (SF±)
NA
FEE ACQUISITION EXHIBIT MAP
of
TAX LOT PARCEL NO. 3325069036
For: City of Sammamish
DATE: NOV. 8, 2016
Sheet 1 of 1
PERTEET
2707 COLBY AVENUE, SUITE 900
EVERETT, WA 98201
425.252.7700 | 800.615.9900

Exhibit 2

EXHIBIT A
RIGHT OF WAY ACQUISITION
REFERENCE PARCEL NO. 108

THAT PORTION OF THE NORTHWEST QUARTER OF THE SOUTHEAST QUARTER OF SECTION 33, TOWNSHIP 25 NORTH, RANGE 6 EAST, W.M., CITY OF SAMMAMISH, KING COUNTY, WASHINGTON, DESCRIBED AS FOLLOWS:

THE SOUTH 5.00 FEET OF THE FOLLOWING DESCRIBED PARCEL:

THE EAST 150 FEET OF THE WEST 180 FEET OF THE SOUTH 430 FEET OF THE NORTHWEST QUARTER OF THE SOUTHEAST QUARTER OF SECTION 33, TOWNSHIP 25 NORTH, RANGE 6 EAST, W.M.;

EXCEPT THE SOUTH 30 FEET THEREOF CONVEYED TO KING COUNTY FOR ROAD PURPOSES BY DEED RECORDED UNDER RECORDING NUMBER 1819495.

CONTAINING 750.0 S.F. MORE OR LESS.

November 10, 2016

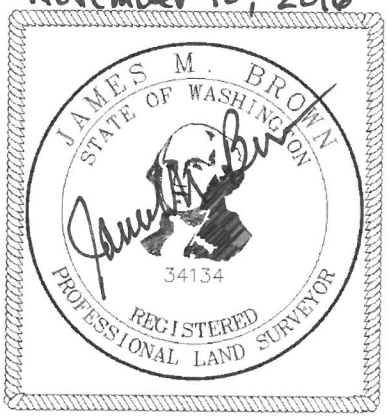

Exhibit 2

EXHIBIT A

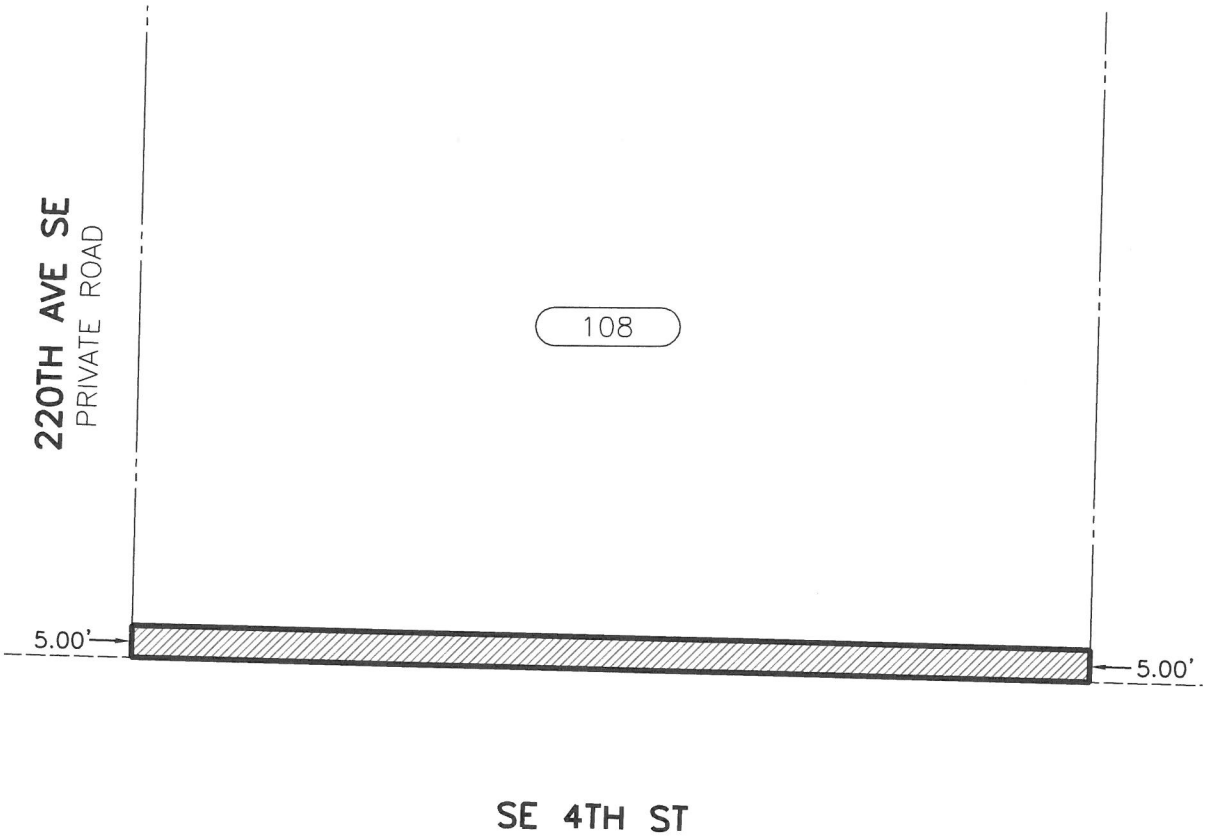

PROJECT PARCEL NO.
108
TOTAL AREA (SF±)
60000.8
FEE ACQUISITION (SF±)
750.0
REMAINDER (SF±)
59,250.8
EASEMENT (SF±)
NA

FEE ACQUISITION

30 15 0 30

SCALE IN FEET

N

FEE ACQUISITION EXHIBIT MAP
of
TAX LOT PARCEL NO. 3325069056

For: City of Sammamish

DATE: NOV. 8, 2016 Sheet 1 of 1

PERTEET
2707 COLBY AVENUE, SUITE 900
EVERETT, WA 98201
425.252.7700 | 800.615.9900

Exhibit 2

EXHIBIT A
RIGHT OF WAY ACQUISITION
REFERENCE PARCEL NO. 109

THAT PORTION OF THE SOUTHWEST QUARTER OF THE SOUTHEAST QUARTER OF SECTION 33, TOWNSHIP 25 NORTH, RANGE 6 EAST, W.M., CITY OF SAMMAMISH, KING COUNTY, WASHINGTON, DESCRIBED AS FOLLOWS:

THE NORTH 7.00 FEET OF THE FOLLOWING DESCRIBED PARCEL:

THE WEST 140 FEET OF THE NORTH HALF OF THE SOUTHWEST QUARTER OF THE SOUTHEAST QUARTER OF SECTION 33, TOWNSHIP 25 NORTH, RANGE 6 EAST, W.M.;

EXCEPT THE NORTH 30 FEET THEREOF CONVEYED TO KING COUNTY FOR ROAD PURPOSES BY DEED RECORDED UNDER RECORDING NUMBER 1823151.

CONTAINING 981.0 S.F. MORE OR LESS.

November 10, 2016

Exhibit 2

EXHIBIT A

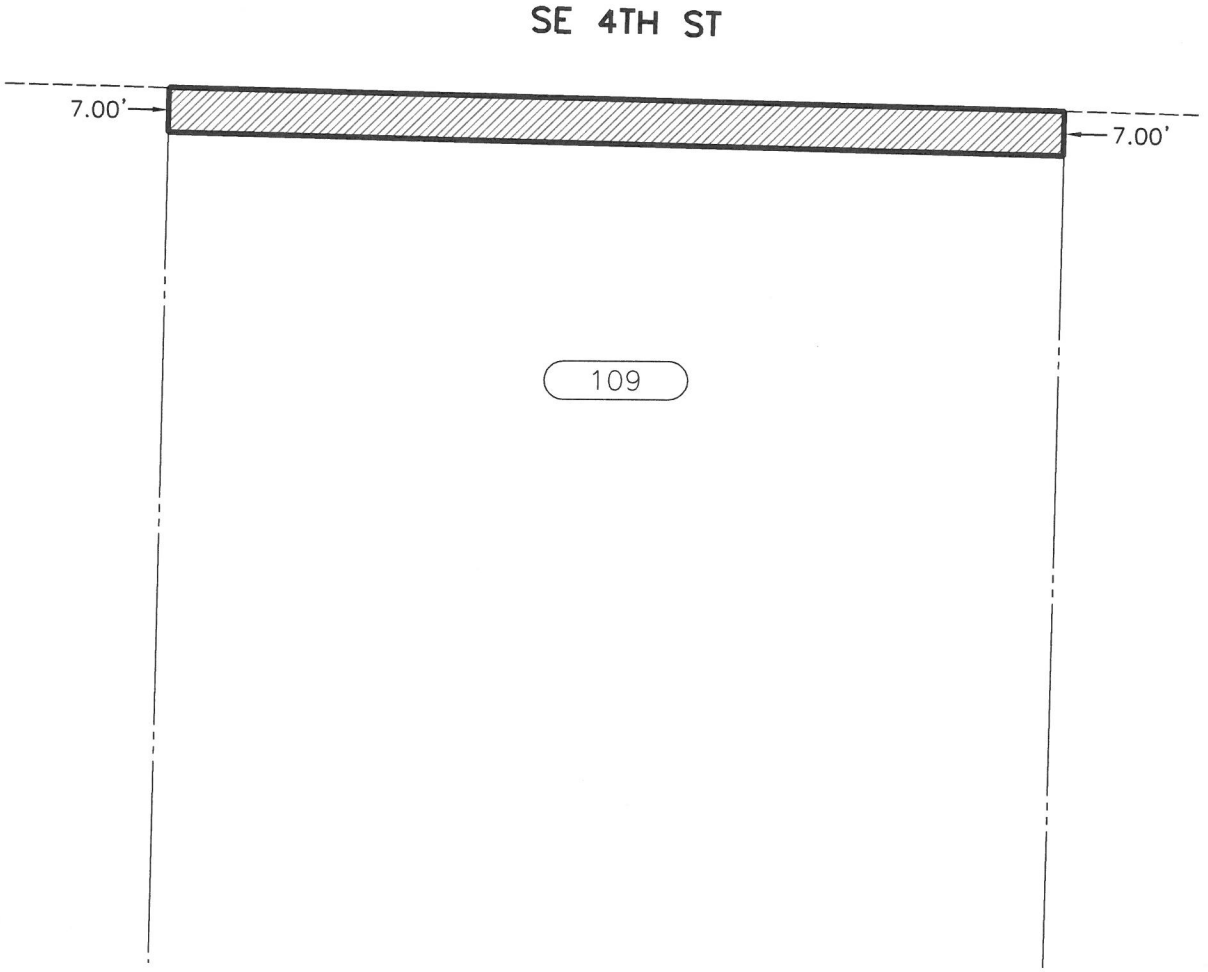

PROJECT PARCEL NO.
109
TOTAL AREA (SF±)
NA
FEE ACQUISITION (SF±)
981.0
REMAINDER (SF±)
NA
EASEMENT (SF±)
NA

FEE ACQUISITION

30 15 0 30

SCALE IN FEET

FEE ACQUISITION EXHIBIT MAP
of
TAX LOT PARCEL NO. 3325069057

For: City of Sammamish

DATE: NOV. 8, 2016 Sheet 1 of 1

PERTEET
2707 COLBY AVENUE, SUITE 900
EVERETT, WA 98201
425.252.7700 | 800.615.9900

Exhibit 2

EXHIBIT A
RIGHT OF WAY ACQUISITION
REFERENCE PARCEL NO. 110

THAT PORTION OF THE SOUTHWEST QUARTER OF THE SOUTHEAST QUARTER OF SECTION 33, TOWNSHIP 25 NORTH, RANGE 6 EAST, W.M., CITY OF SAMMAMISH, KING COUNTY, WASHINGTON, DESCRIBED AS FOLLOWS:

THE NORTH 7.00 FEET OF THE FOLLOWING DESCRIBED PARCEL:

LOT 2 OF CITY OF SAMMAMISH SHORT PLAT NO. SHP001007, AS RECORDED JANUARY 23, 2003 UNDER RECORDING NO. 20030123900001, RECORDS OF KING COUNTY.

CONTAINING 175.0 S.F. MORE OR LESS.

November 10, 2016

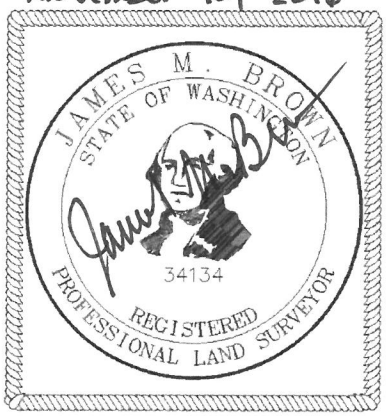

Exhibit 2

EXHIBIT A

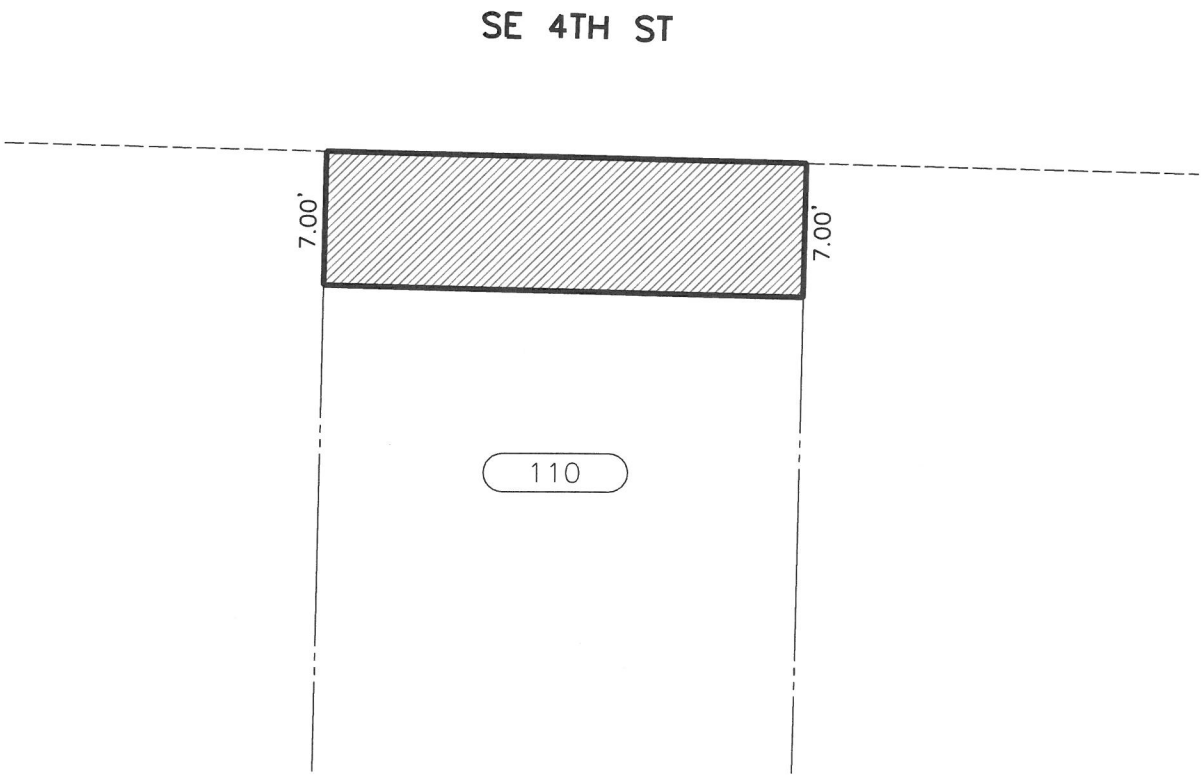

PROJECT PARCEL NO.
110
TOTAL AREA (SF±)
74,774.0
FEE ACQUISITION (SF±)
175.0
REMAINDER (SF±)
74,599.0
EASEMENT (SF±)
NA

FEE ACQUISITION

10 5 0 10

SCALE IN FEET

N

FEE ACQUISITION EXHIBIT MAP
of
TAX LOT PARCEL NO. 3325069176

For: City of Sammamish

DATE: NOV. 8, 2016 Sheet 1 of 1

PERTEET
2707 COLBY AVENUE, SUITE 900
EVERETT, WA 98201
425.252.7700 | 800.615.9900

Exhibit 2

EXHIBIT A
RIGHT OF WAY ACQUISITION
REFERENCE PARCEL NO. 111

THAT PORTION OF THE SOUTHWEST QUARTER OF THE SOUTHEAST QUARTER OF SECTION 33, TOWNSHIP 25 NORTH, RANGE 6 EAST, W.M., CITY OF SAMMAMISH, KING COUNTY, WASHINGTON, DESCRIBED AS FOLLOWS:

THE NORTH 7.00 FEET OF THE FOLLOWING DESCRIBED PARCEL:

LOT 1 OF CITY OF SAMMAMISH SHORT PLAT NO. SHP001007, AS RECORDED JANUARY 23, 2003 UNDER RECORDING NO. 20030123900001, RECORDS OF KING COUNTY.

CONTAINING 1,283.8 S.F. MORE OR LESS.

November 10, 2016

Exhibit 2

EXHIBIT A

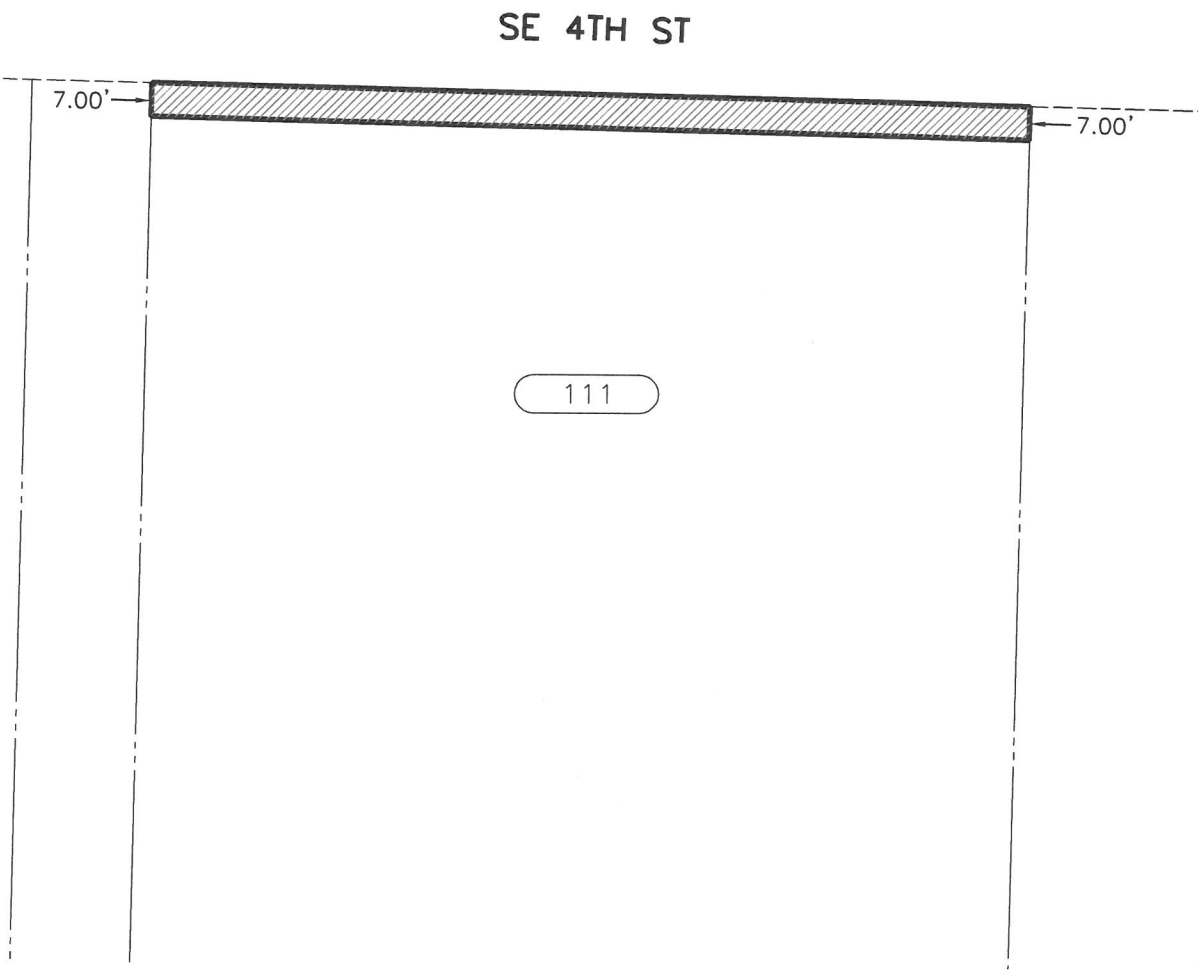

PROJECT PARCEL NO.
111
TOTAL AREA (SF±)
58,712.8
FEE ACQUISITION (SF±)
1,283.8
REMAINDER (SF±)
57,429.0
EASEMENT (SF±)
NA

FEE ACQUISITION

40 20 0 40

SCALE IN FEET

N

FEE ACQUISITION EXHIBIT MAP
of
TAX LOT PARCEL NO. 3325069028

For: City of Sammamish

DATE: NOV. 9, 2016 Sheet 1 of 1

PERTEET
2707 COLBY AVENUE, SUITE 900
EVERETT, WA 98201
425.252.7700 | 800.615.9900

Exhibit 2

EXHIBIT A
RIGHT OF WAY ACQUISITION
REFERENCE PARCEL NO. 112

THAT PORTION OF THE NORTHWEST QUARTER OF THE SOUTHEAST QUARTER OF SECTION 33, TOWNSHIP 25 NORTH, RANGE 6 EAST, W.M., CITY OF SAMMAMISH, KING COUNTY, WASHINGTON, DESCRIBED AS FOLLOWS:

THE SOUTH 5.00 FEET OF THE FOLLOWING DESCRIBED PARCEL:

THE SOUTH 400 FEET OF THE EAST 100 FEET OF THE WEST 430 FEET OF THE NORTHWEST QUARTER OF THE SOUTHEAST QUARTER OF SECTION 33, TOWNSHIP 25 NORTH, RANGE 6 EAST, W.M.;

EXCEPT THE SOUTH 30 FEET THEREOF CONVEYED TO KING COUNTY FOR ROAD BY DEED RECORDED UNDER RECORDING NUMBER 1819495.

CONTAINING 500.0 S.F. MORE OR LESS.

November 10, 2016

Exhibit 2

EXHIBIT A

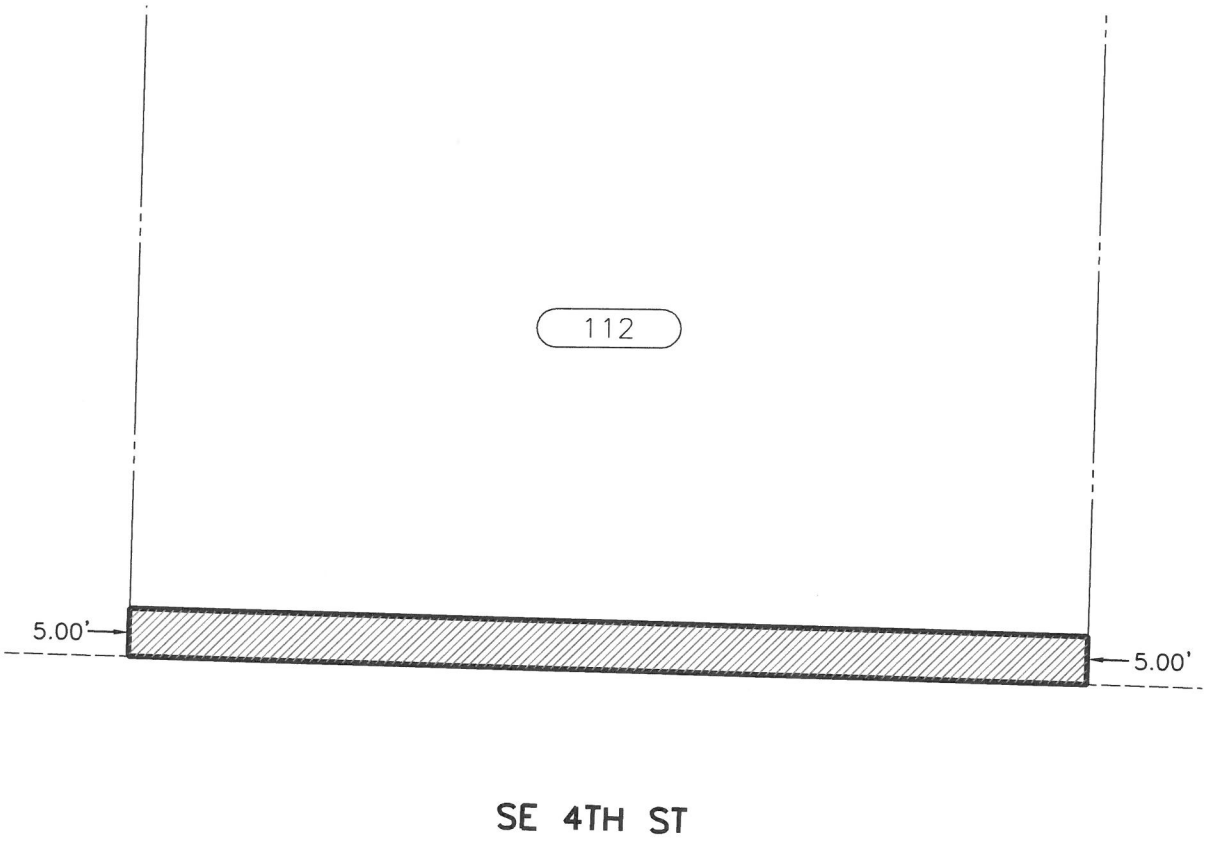

PROJECT PARCEL NO.
112
TOTAL AREA (SF±)
37,000.5
FEE ACQUISITION (SF±)
500.0
REMAINDER (SF±)
36,500.5
EASEMENT (SF±)
NA

FEE ACQUISITION

20 10 0 20

SCALE IN FEET

FEE ACQUISITION EXHIBIT MAP
of
TAX LOT PARCEL NO. 3325069063

For: City of Sammamish

DATE: NOV. 8, 2016 Sheet 1 of 1

PERTEET
2707 COLBY AVENUE, SUITE 900
EVERETT, WA 98201
425.252.7700 | 800.615.9900

Exhibit 2

EXHIBIT A
RIGHT OF WAY ACQUISITION
REFERENCE PARCEL NO. 113

THAT PORTION OF THE NORTHWEST QUARTER OF THE SOUTHEAST QUARTER OF SECTION 33, TOWNSHIP 25 NORTH, RANGE 6 EAST, W.M., CITY OF SAMMAMISH, KING COUNTY, WASHINGTON, DESCRIBED AS FOLLOWS:

THE SOUTH 5.00 FEET OF THE FOLLOWING DESCRIBED PARCEL:

THE EAST 150 FEET OF THE WEST 330 FEET OF THE SOUTH 400 FEET OF THE NORTHWEST QUARTER OF THE SOUTHEAST QUARTER OF SECTION 33, TOWNSHIP 25 NORTH, RANGE 6 EAST, W.M.;

EXCEPT THE SOUTH 30 FEET THEREOF CONVEYED TO KING COUNTY FOR ROAD BY DEED RECORDED UNDER RECORDING NO. 1819495.

CONTAINING 750.0 S.F. MORE OR LESS.

November 10, 2016

Exhibit 2

EXHIBIT A

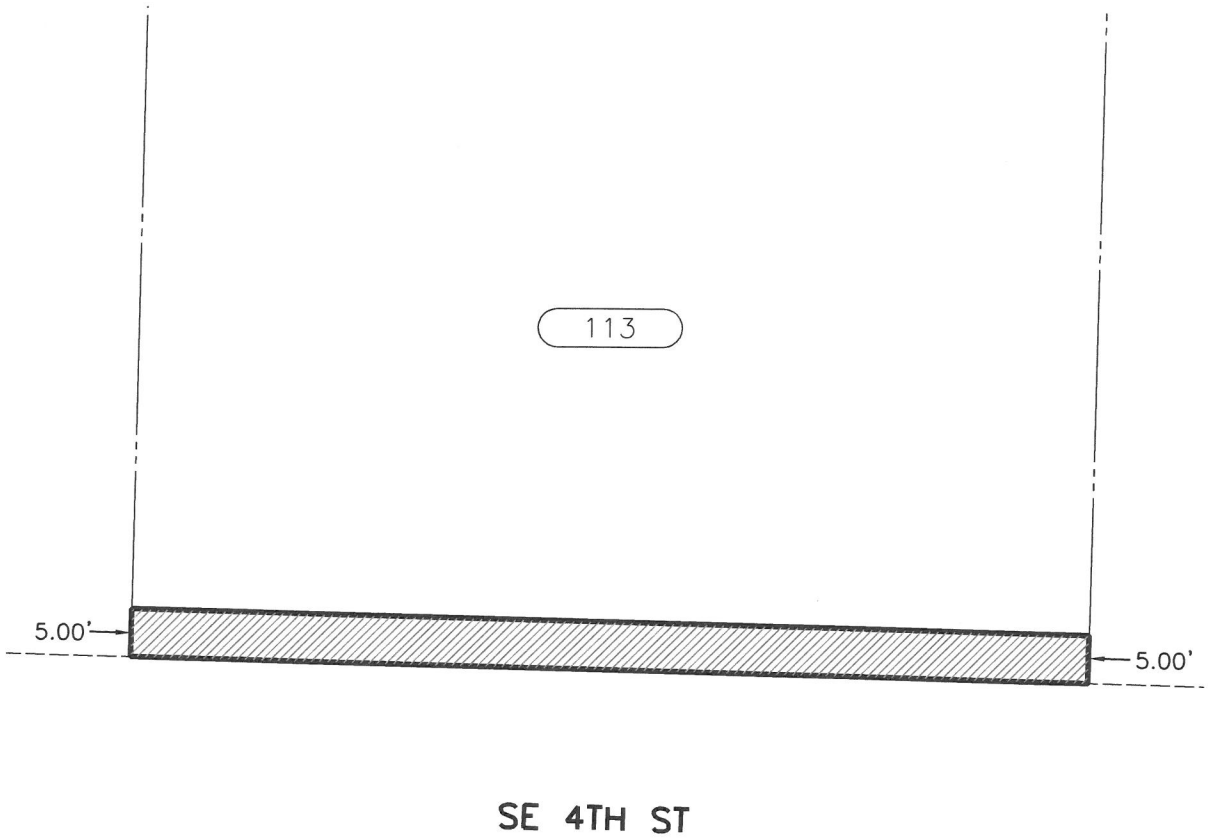

PROJECT PARCEL NO.
113
TOTAL AREA (SF±)
55,500.7
FEE ACQUISITION (SF±)
750.0
REMAINDER (SF±)
54,750.7
EASEMENT (SF±)
NA

FEE ACQUISITION

20 10 0 20

SCALE IN FEET

N

FEE ACQUISITION EXHIBIT MAP
of
TAX LOT PARCEL NO. 3325069061

For: City of Sammamish

DATE: NOV. 8, 2016 Sheet 1 of 1

PERTEET
2707 COLBY AVENUE, SUITE 900
EVERETT, WA 98201
425.252.7700 | 800.615.9900

Exhibit 2

EXHIBIT A
RIGHT OF WAY ACQUISITION
REFERENCE PARCEL NO. 114

THAT PORTION OF THE SOUTHWEST QUARTER OF THE SOUTHEAST QUARTER OF SECTION 33, TOWNSHIP 25 NORTH, RANGE 6 EAST, W.M., CITY OF SAMMAMISH, KING COUNTY, WASHINGTON, DESCRIBED AS FOLLOWS:

THE NORTH 7.00 FEET OF THE FOLLOWING DESCRIBED PARCEL:

THE NORTH HALF OF THE SOUTHWEST QUARTER OF THE SOUTHEAST QUARTER OF SECTION 33, TOWNSHIP 25 NORTH, RANGE 6 EAST, W.M.;
EXCEPT THE EAST 878.69 FEET THEREOF;
AND EXCEPT THE WEST 348.40 FEET THEREOF;
AND EXCEPT THE NORTH 30 FEET CONVEYED TO KING COUNTY FOR ROAD BY DEED RECORDED UNDER RECORDING NUMBER 1823151.

CONTAINING 760.2 S.F. MORE OR LESS.

November 10, 2016

Exhibit 2

EXHIBIT A

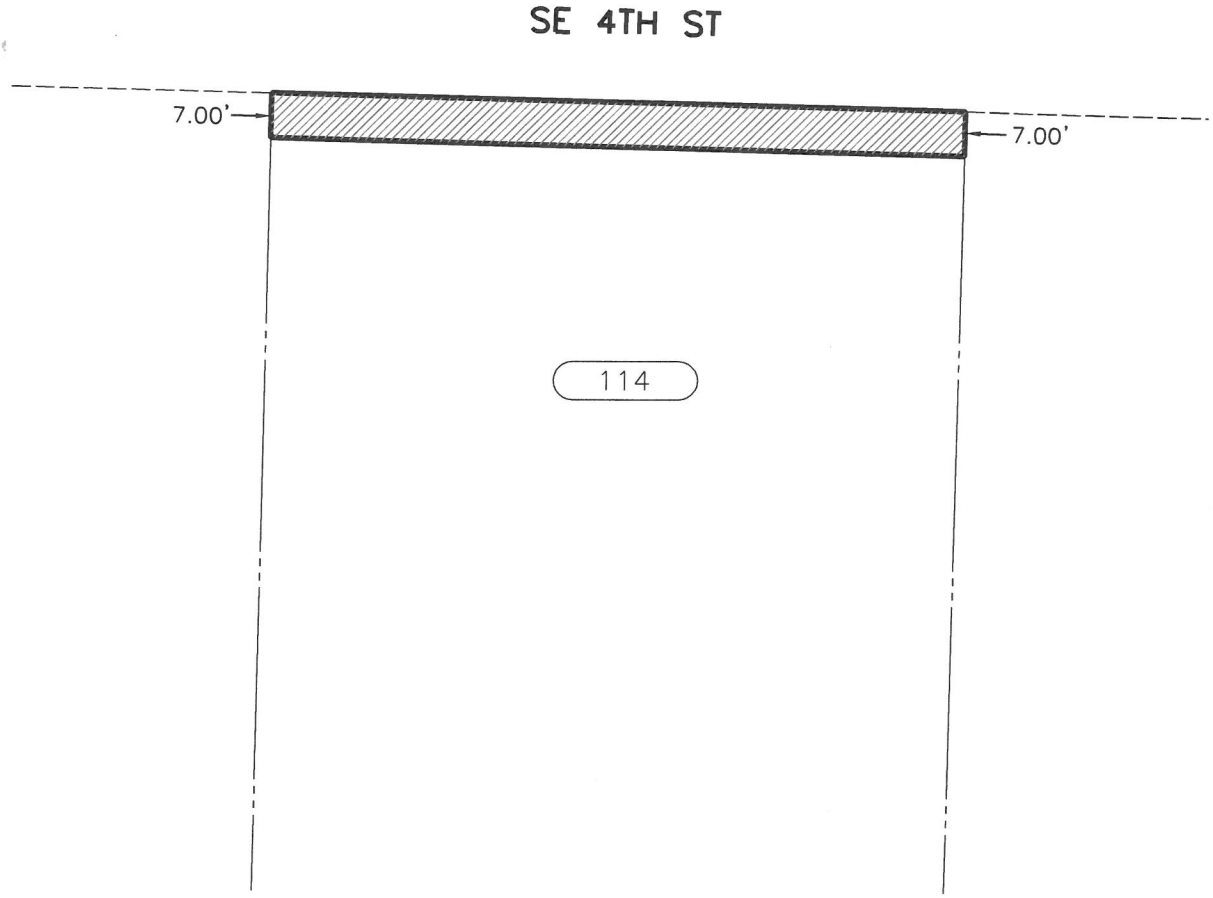

PROJECT PARCEL NO.
114
TOTAL AREA (SF±)
69,169.8
FEE ACQUISITION (SF±)
760.2
REMAINDER (SF±)
68,409.6
EASEMENT (SF±)
NA

FEE ACQUISITION

30 15 0 30

SCALE IN FEET

N

FEE ACQUISITION EXHIBIT MAP
of
TAX LOT PARCEL NO. 3325069041

For: City of Sammamish

DATE: NOV. 8, 2016 Sheet 1 of 1

PERTEET
2707 COLBY AVENUE, SUITE 900
EVERETT, WA 98201
425.252.7700 | 800.615.9900

Exhibit 2

EXHIBIT A
RIGHT OF WAY ACQUISITION
REFERENCE PARCEL NO. 115

THAT PORTION OF THE NORTHWEST QUARTER OF THE SOUTHEAST QUARTER OF SECTION 33, TOWNSHIP 25 NORTH, RANGE 6 EAST, W.M., CITY OF SAMMAMISH, KING COUNTY, WASHINGTON, DESCRIBED AS FOLLOWS:

THE SOUTH 5.00 FEET OF THE FOLLOWING DESCRIBED PARCEL:

THE EAST 120 FEET OF THE WEST 550 FEET OF THE SOUTH 180 FEET OF THE NORTHWEST QUARTER OF THE SOUTHEAST QUARTER OF SECTION 33, TOWNSHIP 25 NORTH, RANGE 6 EAST, W.M.;

EXCEPT THE SOUTH 30 FEET FOR ROAD.

CONTAINING 600.0 S.F. MORE OR LESS.

November 10, 2016

Exhibit 2

EXHIBIT A

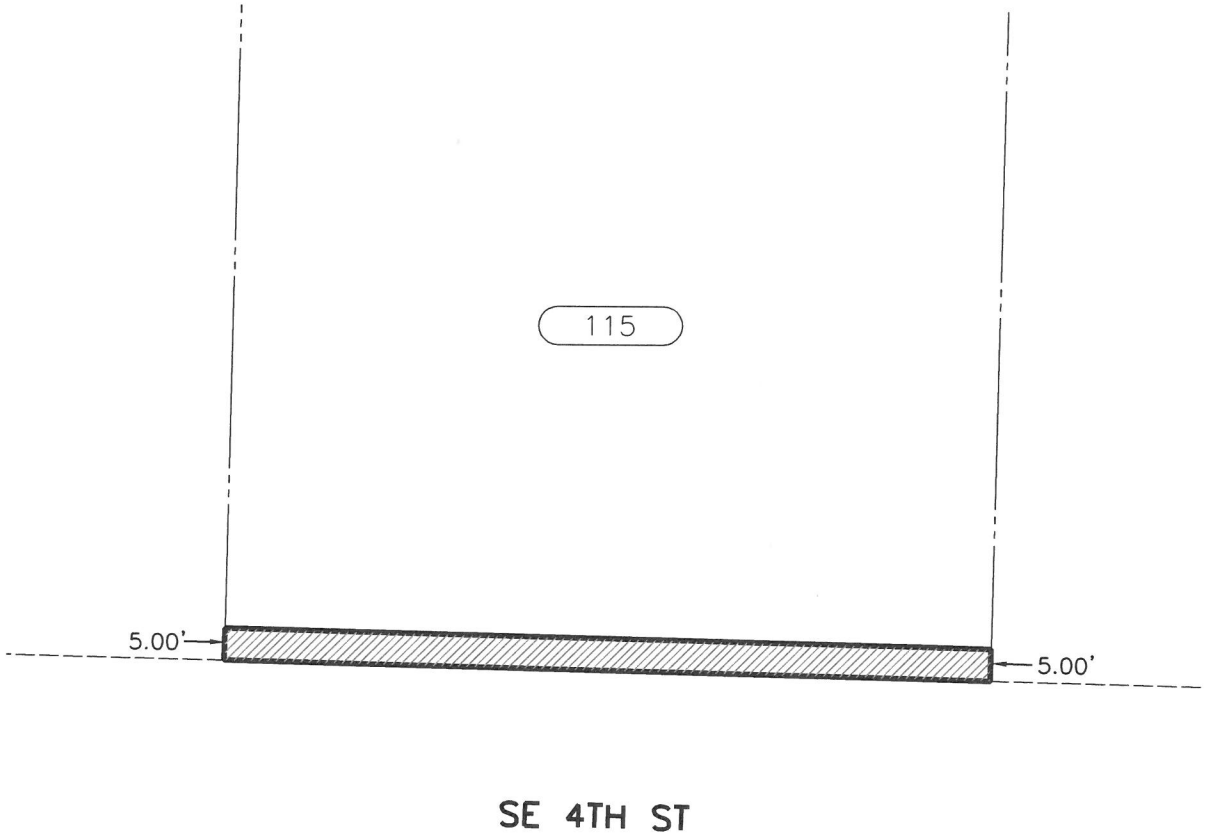

PROJECT PARCEL NO.
115
TOTAL AREA (SF±)
18,000.2
FEE ACQUISITION (SF±)
600.0
REMAINDER (SF±)
17,400.2
EASEMENT (SF±)
NA

FEE ACQUISITION

30 15 0 30

SCALE IN FEET

N

FEE ACQUISITION EXHIBIT MAP
of
TAX LOT PARCEL NO. 3325069021

For: City of Sammamish

DATE: NOV. 8, 2016 Sheet 1 of 1

PERTEET
2707 COLBY AVENUE, SUITE 900
EVERETT, WA 98201
425.252.7700 | 800.615.9900

Exhibit 2

EXHIBIT A
RIGHT OF WAY ACQUISITION
REFERENCE PARCEL NO. 116

THAT PORTION OF THE SOUTHWEST QUARTER OF THE SOUTHEAST QUARTER OF SECTION 33, TOWNSHIP 25 NORTH, RANGE 6 EAST, W.M., CITY OF SAMMAMISH, KING COUNTY, WASHINGTON, DESCRIBED AS FOLLOWS:

THE NORTH 7.00 FEET OF THE FOLLOWING DESCRIBED PARCEL:

THE NORTH 250 FEET OF THE WEST 198 FEET OF THE EAST 878.89 FEET OF THE NORTH HALF OF THE SOUTHWEST QUARTER OF THE SOUTHEAST QUARTER OF SECTION 33, TOWNSHIP 25 NORTH, RANGE 6 EAST, W.M.;

EXCEPT THE NORTH 30 FEET THEREOF CONVEYED TO KING COUNTY FOR E.A. PEARSON ROAD (S.E. 4TH STREET) BY DEED RECORDED UNDER RECORDING NO. 1823151.

CONTAINING 1,386.0 S.F. MORE OR LESS.

November 10, 2016

Exhibit 2

EXHIBIT A

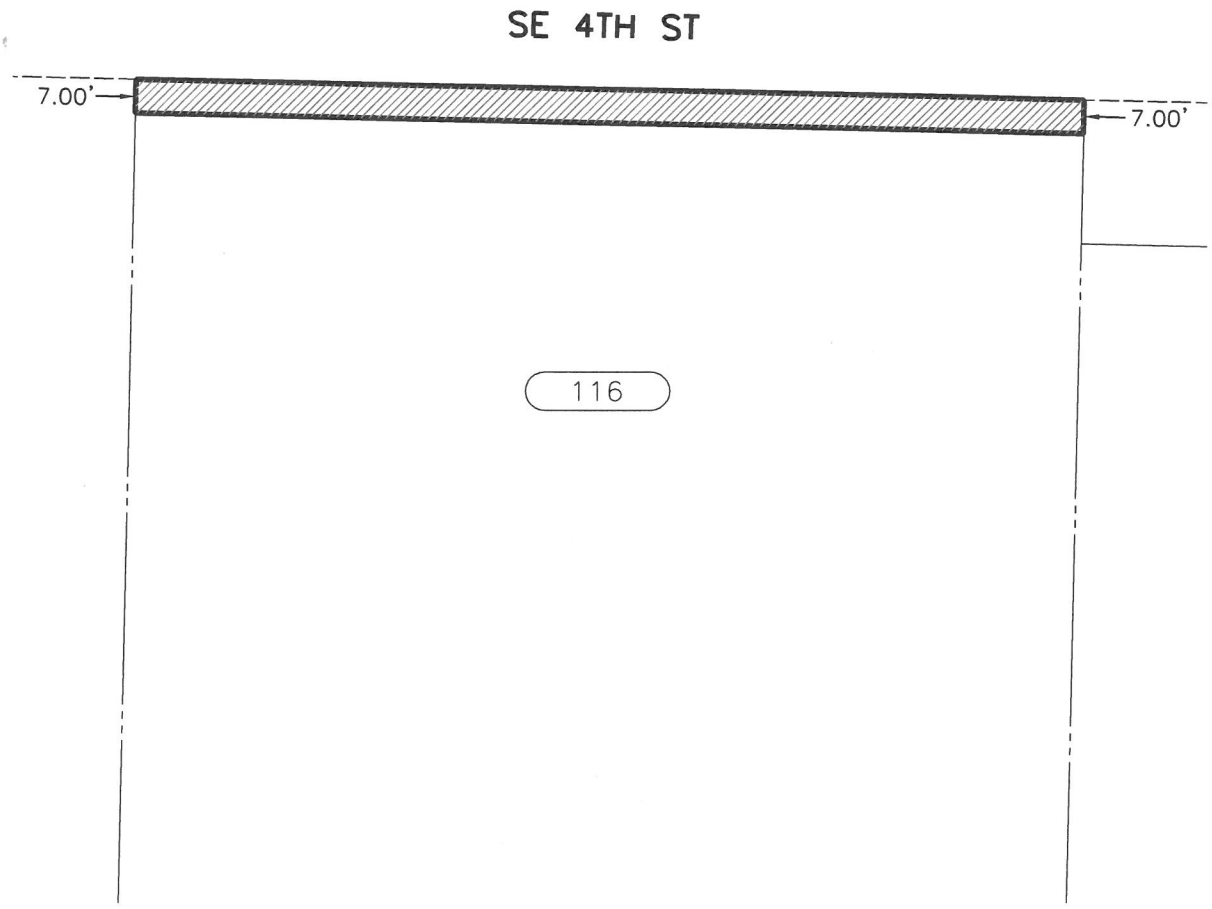

PROJECT PARCEL NO.
116
TOTAL AREA (SF±)
43,560.2
FEE ACQUISITION (SF±)
1,386.0
REMAINDER (SF±)
42,174.2
EASEMENT (SF±)
NA

FEE ACQUISITION

40 20 0 40

SCALE IN FEET

N

FEE ACQUISITION EXHIBIT MAP
of
TAX LOT PARCEL NO. 3325069060

For: City of Sammamish

DATE: NOV. 9, 2016 Sheet 1 of 1

PERTEET
2707 COLBY AVENUE, SUITE 900
EVERETT, WA 98201
425.252.7700 | 800.615.9900

Exhibit 2

EXHIBIT A
RIGHT OF WAY ACQUISITION
REFERENCE PARCEL NO. 117

THAT PORTION OF THE NORTHWEST QUARTER OF THE SOUTHEAST QUARTER OF SECTION 33, TOWNSHIP 25 NORTH, RANGE 6 EAST, W.M., CITY OF SAMMAMISH, KING COUNTY, WASHINGTON, DESCRIBED AS FOLLOWS:

BEGINNING AT THE EAST LINE OF THE EAST 120 FEET OF THE WEST 550 FEET OF THE SOUTH 30 FEET OF THE SOUTH 180 FEET OF SAID NORTHWEST QUARTER AT ITS INTERSECTION WITH THE NORTH MARGIN OF SOUTHEAST FOURTH STREET ALSO KNOWN AS E.A. PEARSON COUNTY ROAD;

THENCE S 88°49'03" E, ALONG SAID NORTH MARGIN OF SOUTHEAST FOURTH STREET, A DISTANCE OF 276.54 FEET TO THE WESTERLY LINE OF 222ND PLACE SOUTHEAST AS DEPICTED ON KING COUNTY SHORT PLAT NO. L98S0054, RECORDED UNDER RECORDING NO. 20000508900002, RECORDS OF KING COUNTY, WASHINGTON;
THENCE N 18°04'21" W, ALONG THE WESTERLY LINE OF SAID 222ND PLACE SOUTHEAST, A DISTANCE OF 91.92 FEET;
THENCE S 71°55'39" W, A DISTANCE OF 22.28 FEET;
THENCE S 00°52'03" W, A DISTANCE OF 45.44 FEET;
THENCE S 38°07'33" W, A DISTANCE OF 36.27 FEET;
THENCE N 88°49'03" W, A DISTANCE OF 203.68 FEET TO THE EAST LINE OF THE EAST 120 FEET OF THE WEST 550 FEET OF THE NORTHWEST QUARTER OF THE SOUTHEAST QUARTER OF SAID SECTION 33 ;
THENCE S 00°53'28" W, ALONG SAID EAST LINE, A DISTANCE OF 5.00 FEET TO THE **POINT OF BEGINNING.**

CONTAINING 4,489.4 S.F. MORE OR LESS.

November 18, 2016

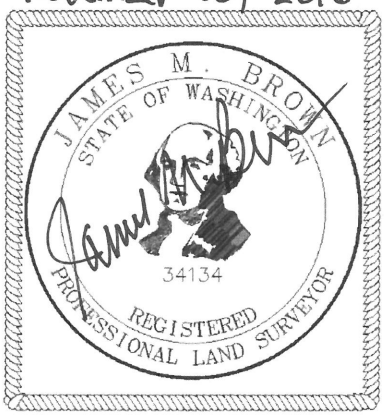

Exhibit 2

EXHIBIT A

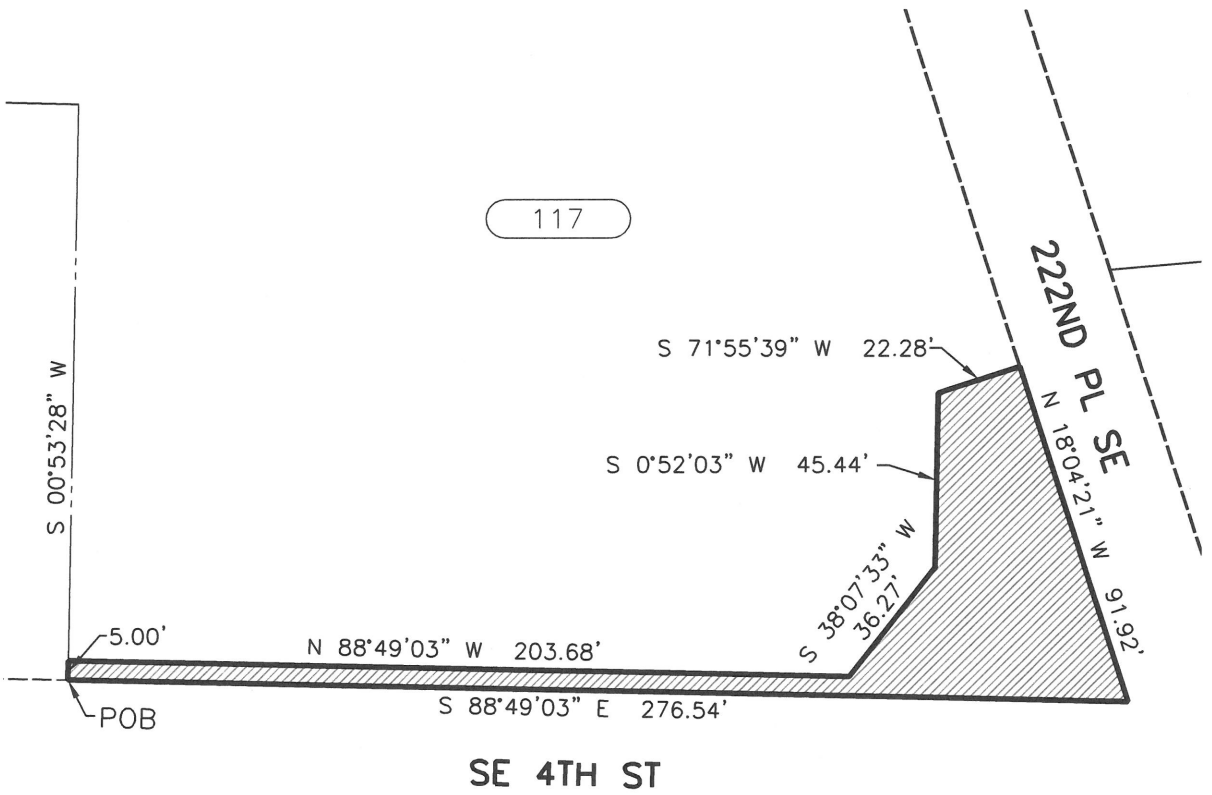

PROJECT PARCEL NO.
117
TOTAL AREA (SF±)
139,844.3
FEE ACQUISITION (SF±)
4,489.4
REMAINDER (SF±)
135,354.9
EASEMENT (SF±)
NA

FEE ACQUISITION

50 25 0 50

SCALE IN FEET

FEE ACQUISITION EXHIBIT MAP
of
TAX LOT PARCEL NO. 3325069014

For: City of Sammamish

DATE: NOV. 17, 2016 Sheet 1 of 1

PERTEET
2707 COLBY AVENUE, SUITE 900
EVERETT, WA 98201
425.252.7700 | 800.615.9900

Exhibit 2

EXHIBIT A
RIGHT OF WAY ACQUISITION
REFERENCE PARCEL NO. 118

THAT PORTION OF THE SOUTHWEST QUARTER OF THE SOUTHEAST QUARTER OF SECTION 33, TOWNSHIP 25 NORTH, RANGE 6 EAST, W.M., CITY OF SAMMAMISH, KING COUNTY, WASHINGTON, DESCRIBED AS FOLLOWS:

BEGINNING AT THE NORTHWEST CORNER OF TRACT A, BALMORAL DIVISION 1, ACCORDING TO THE PLAT THEREOF RECORDED IN VOLUME 131 OF PLATS, PAGE(S) 92 AND 93, RECORDS OF KING COUNTY, WASHINGTON;

THENCE S 88°49'03" E, ALONG THE NORTH LINE OF SAID TRACT A, A DISTANCE OF 120.37 FEET TO THE NORTHEAST CORNER OF SAID TRACT A;
THENCE S 01°02'13" W, ALONG THE EAST LINE OF SAID TRACT A, A DISTANCE OF 30.00 FEET TO THE SOUTHEAST CORNER OF SAID TRACT A;
THENCE N 88°49'03" W, ALONG THE SOUTH LINE OF SAID TRACT A, A DISTANCE OF 3.25 FEET;
THENCE N 15°14'15" W, A DISTANCE OF 23.98 FEET;
THENCE N 88°49'03" W, A DISTANCE OF 110.40 FEET TO THE WEST LINE OF SAID TRACT A;
THENCE N 01°00'58" E, ALONG SAID WEST LINE, A DISTANCE OF 7.00 FEET TO THE **POINT OF BEGINNING**.

CONTAINING 994.7 S.F. MORE OR LESS.

November 10, 2016

Exhibit 2

EXHIBIT A

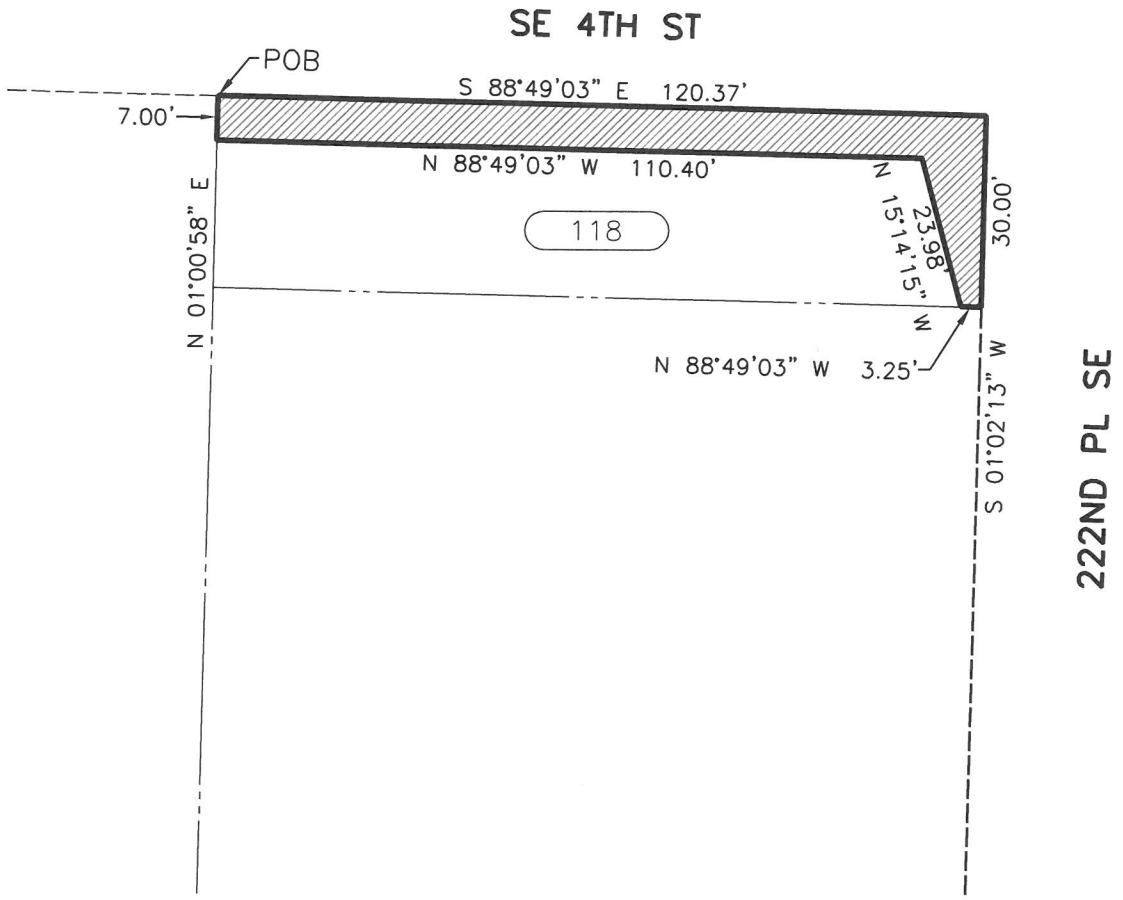

PROJECT PARCEL NO.
118
TOTAL AREA (SF±)
3,611.0
FEE ACQUISITION (SF±)
994.7
REMAINDER (SF±)
2,616.3
EASEMENT (SF±)
NA

FEE ACQUISITION

30 15 0 30

SCALE IN FEET

N

FEE ACQUISITION EXHIBIT MAP
of
TAX LOT PARCEL NO. 050900-TRCT

For: City of Sammamish

DATE: NOV. 8, 2016 Sheet 1 of 1

PERTEET
2707 COLBY AVENUE, SUITE 900
EVERETT, WA 98201
425.252.7700 | 800.615.9900

Exhibit 2

EXHIBIT A
RIGHT OF WAY ACQUISITION
REFERENCE PARCEL NO. 119

THAT PORTION OF THE SOUTHWEST QUARTER OF THE SOUTHEAST QUARTER OF SECTION 33, TOWNSHIP 25 NORTH, RANGE 6 EAST, W.M., CITY OF SAMMAMISH, KING COUNTY, WASHINGTON, DESCRIBED AS FOLLOWS:

BEGINNING AT THE NORTHEAST CORNER OF LOT 1, BALMORAL DIVISION 1, ACCORDING TO THE PLAT THEREOF RECORDED IN VOLUME 131 OF PLATS, PAGE(S) 92 AND 93, RECORDS OF KING COUNTY, WASHINGTON;

THENCE S 01°02'13" W, ALONG THE EAST LINE OF SAID LOT 1, A DISTANCE OF 11.13 FEET;
THENCE N 15°14'15" W, A DISTANCE OF 11.60 FEET TO THE NORTH LINE OF SAID LOT 1;
THENCE S 88°49'03" E, ALONG SAID NORTH LINE, A DISTANCE OF 3.25 FEET TO THE **POINT OF BEGINNING**.

CONTAINING 18.1 S.F. MORE OR LESS.

November 10, 2016

Exhibit 2

EXHIBIT A

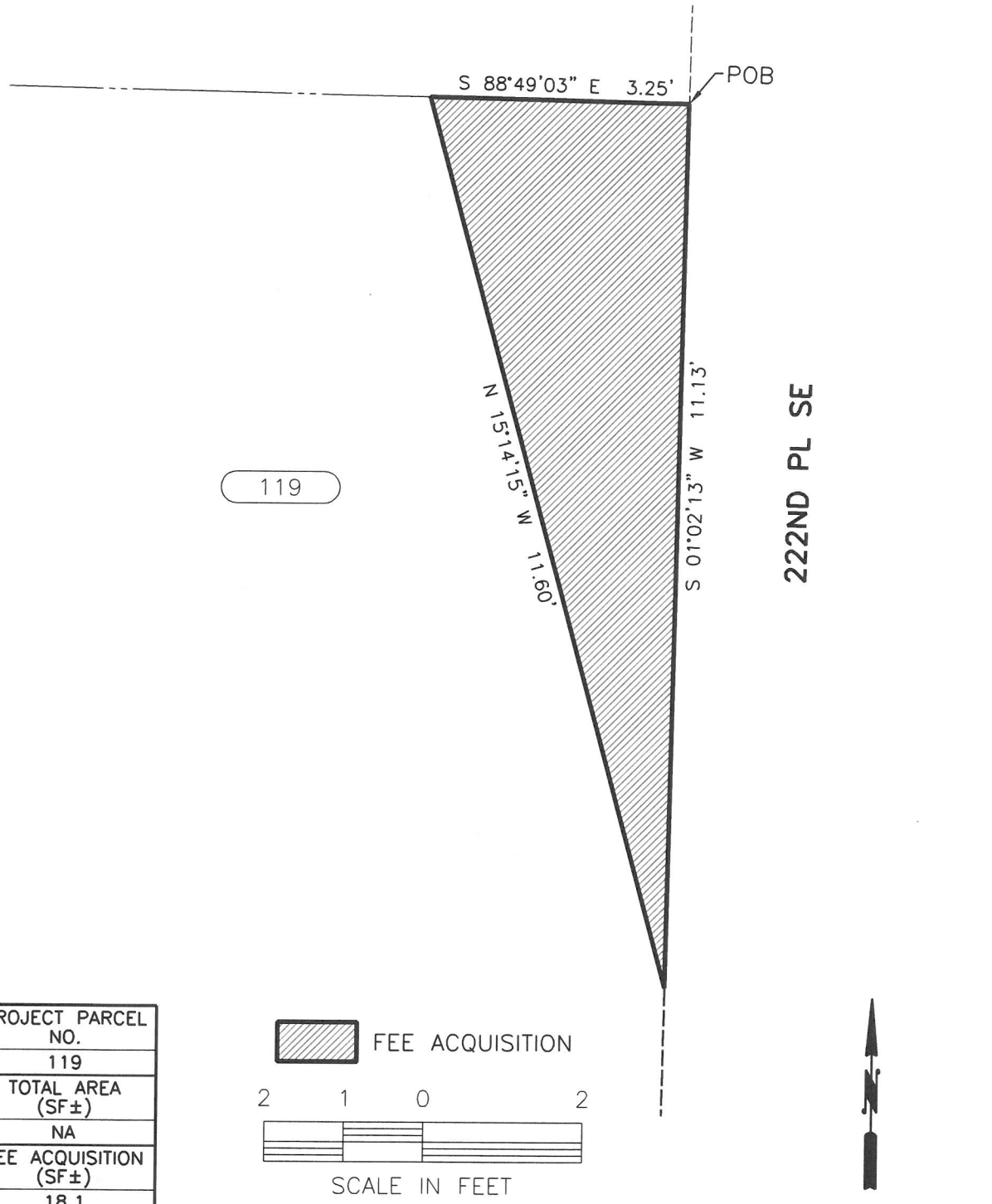

PROJECT PARCEL NO.
119
TOTAL AREA (SF±)
NA
FEE ACQUISITION (SF±)
18.1
REMAINDER (SF±)
NA
EASEMENT (SF±)
NA

FEE ACQUISITION

2 1 0 2

SCALE IN FEET

FEE ACQUISITION EXHIBIT MAP
of
TAX LOT PARCEL NO. 0509000010

For: City of Sammamish

DATE: NOV. 8, 2016 Sheet 1 of 1

PERTEET
2707 COLBY AVENUE, SUITE 900
EVERETT, WA 98201
425.252.7700 | 800.615.9900

Exhibit 2

EXHIBIT A
RIGHT OF WAY ACQUISITION
REFERENCE PARCEL NO. 120

THAT PORTION OF THE NORTHWEST QUARTER OF THE SOUTHEAST QUARTER OF SECTION 33, TOWNSHIP 25 NORTH, RANGE 6 EAST, W.M., CITY OF SAMMAMISH, KING COUNTY, WASHINGTON, DESCRIBED AS FOLLOWS:

THE SOUTH 6.00 FEET OF THE FOLLOWING DESCRIBED PARCEL:

LOT 2, KING COUNTY SHORT PLAT NO. L98S0054, RECORDED UNDER RECORDING NO. 20000508900002, RECORDS OF KING COUNTY, WASHINGTON;

CONTAINING 1,290.5 S.F. MORE OR LESS.

November 17, 2016

Exhibit 2

EXHIBIT A

PROJECT PARCEL NO.
120
TOTAL AREA (SF±)
29,155.8
FEE ACQUISITION (SF±)
1,290.5
REMAINDER (SF±)
27,865.3
EASEMENT (SF±)
NA

FEE ACQUISITION

40 20 0 40

SCALE IN FEET

N

FEE ACQUISITION EXHIBIT MAP
of
TAX LOT PARCEL NO. 3325069174

For: City of Sammamish

DATE: NOV. 17, 2016 Sheet 1 of 1

PERTEET
2707 COLBY AVENUE, SUITE 900
EVERETT, WA 98201
425.252.7700 | 800.615.9900

Exhibit 2

EXHIBIT A
RIGHT OF WAY ACQUISITION
REFERENCE PARCEL NO. 121

THAT PORTION OF THE SOUTHWEST QUARTER OF THE SOUTHEAST QUARTER OF SECTION 33, TOWNSHIP 25 NORTH, RANGE 6 EAST, W.M., CITY OF SAMMAMISH, KING COUNTY, WASHINGTON, DESCRIBED AS FOLLOWS:

BEGINNING AT THE SOUTHWEST CORNER OF THE NORTH 30.00 FEET OF THE WEST 160.38 FEET OF THE EAST 520.31 FEET OF THE NORTH HALF OF THE SOUTHWEST QUARTER OF THE SOUTHEAST QUARTER OF SECTION 33, TOWNSHIP 25 NORTH, RANGE 6 EAST, W.M.;

THENCE S 88°49'03" E, ALONG THE SOUTH LINE OF SAID NORTH 30.00 FEET, A DISTANCE OF 160.38 FEET;
THENCE S 01°02'13" W, ALONG THE EAST LINE OF SAID WEST 160.38 FEET, A DISTANCE OF 6.00 FEET;
THENCE N 88°49'03" W, A DISTANCE OF 123.56 FEET;
THENCE S 32°05'17" W, A DISTANCE OF 32.62 FEET;
THENCE S 01°02'13" W, A DISTANCE OF 69.94 FEET;
THENCE N 88°57'47" W, A DISTANCE OF 20.00 FEET TO THE WEST LINE OF SAID WEST 160.38 FEET;
THENCE N 01°02'13" E, ALONG SAID WEST LINE, A DISTANCE OF 103.97 FEET TO THE POINT OF BEGINNING.

CONTAINING 3,156.7 S.F. MORE OR LESS.

November 17, 2016

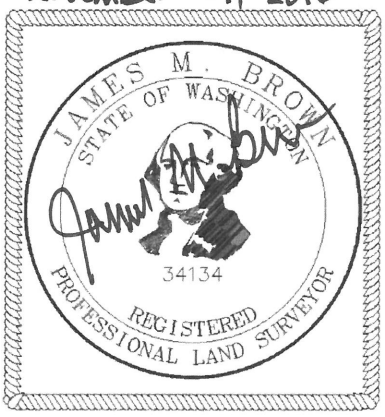

Exhibit 2

EXHIBIT A

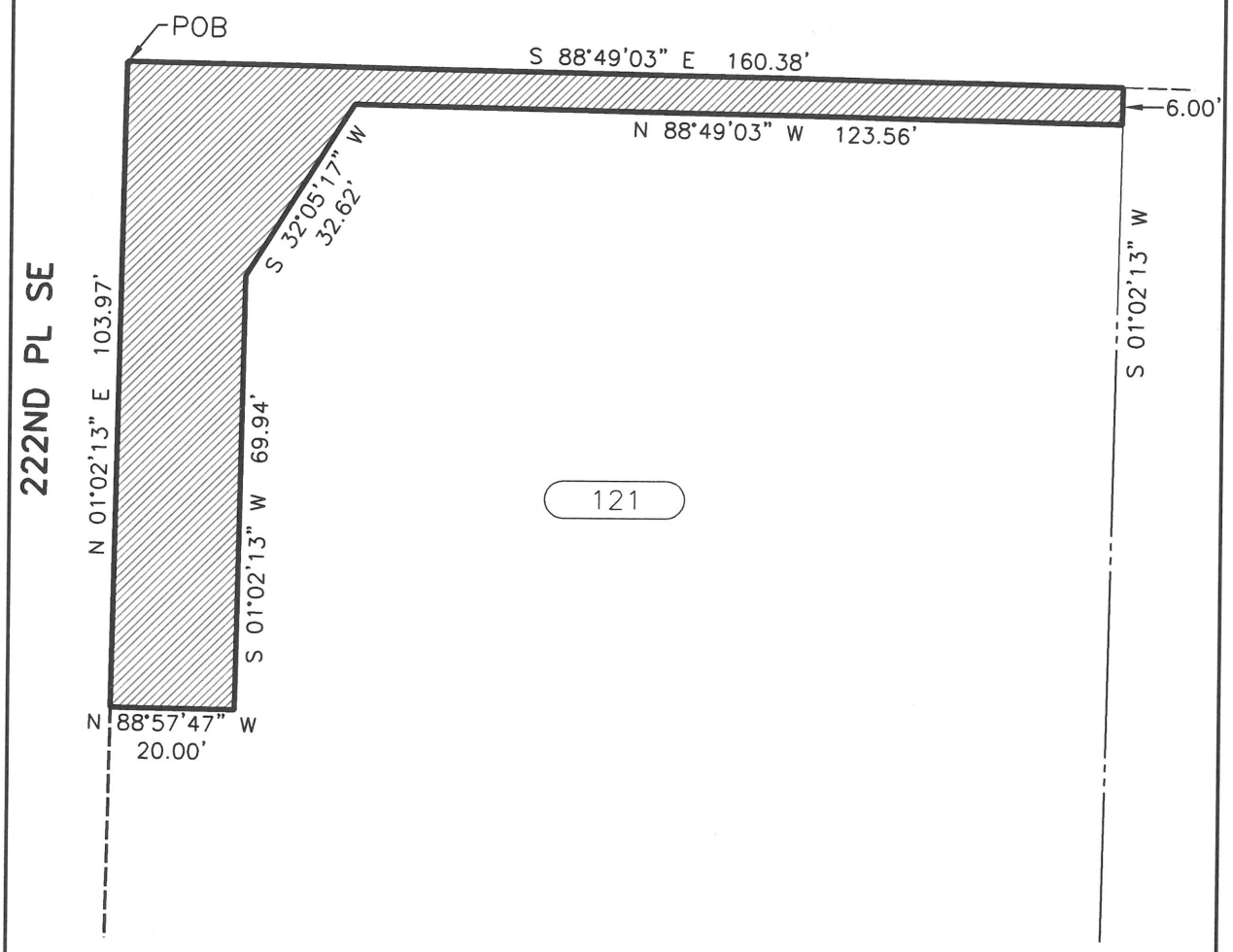

PROJECT PARCEL NO.
121
TOTAL AREA (SF±)
103,042.3
FEE ACQUISITION (SF±)
3,156.7
REMAINDER (SF±)
99,885.6
EASEMENT (SF±)
NA

FEE ACQUISITION

30 15 0 30

SCALE IN FEET

FEE ACQUISITION EXHIBIT MAP
of
TAX LOT PARCEL NO. 3325069044

For: City of Sammamish

DATE: NOV. 9, 2016 Sheet 1 of 1

PERTEET
2707 COLBY AVENUE, SUITE 900
EVERETT, WA 98201
425.252.7700 | 800.615.9900

Exhibit 2

EXHIBIT A
RIGHT OF WAY ACQUISITION
REFERENCE PARCEL NO. 122

THAT PORTION OF THE SOUTHWEST QUARTER OF THE SOUTHEAST QUARTER OF SECTION 33, TOWNSHIP 25 NORTH, RANGE 6 EAST, W.M., CITY OF SAMMAMISH, KING COUNTY, WASHINGTON, DESCRIBED AS FOLLOWS:

THE NORTH 6.00 FEET OF THE FOLLOWING DESCRIBED PARCEL:

LOT 1, KING COUNTY SHORT PLAT NO. 577022, RECORDED UNDER RECORDING NO. 7803130563, RECORDS OF KING COUNTY, WASHINGTON.

CONTAINING 1,031.7 S.F. MORE OR LESS.

November 10, 2016

Exhibit 2

EXHIBIT A

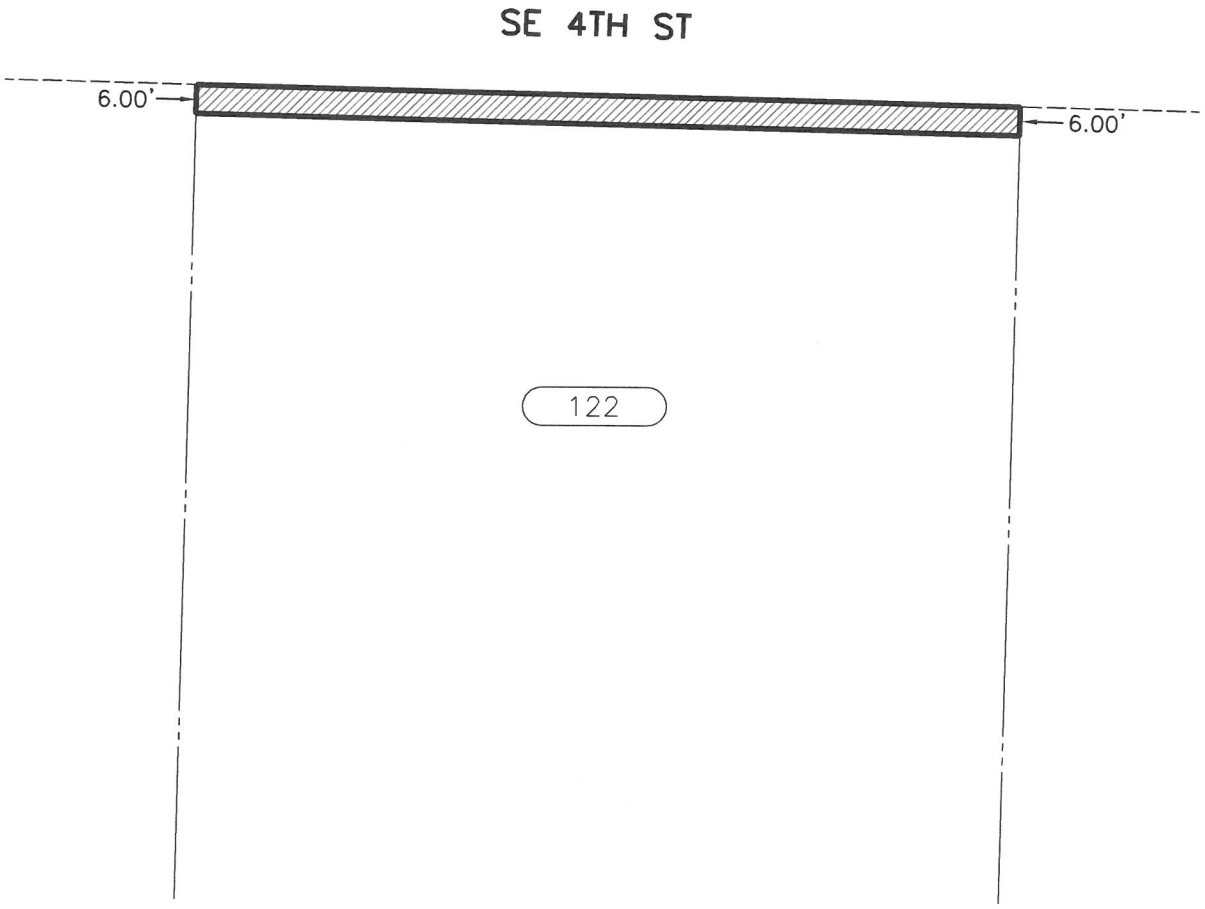

PROJECT PARCEL NO.
122
TOTAL AREA (SF±)
43,856.7
FEE ACQUISITION (SF±)
1,031.7
REMAINDER (SF±)
42,825.0
EASEMENT (SF±)
NA

FEE ACQUISITION

40 20 0 40

SCALE IN FEET

N

FEE ACQUISITION EXHIBIT MAP
of
TAX LOT PARCEL NO. 3325069102

For: City of Sammamish

DATE: NOV. 9, 2016 Sheet 1 of 1

PERTEET
2707 COLBY AVENUE, SUITE 900
EVERETT, WA 98201
425.252.7700 | 800.615.9900

Exhibit 2

EXHIBIT A
RIGHT OF WAY ACQUISITION
REFERENCE PARCEL NO. 123

THAT PORTION OF THE NORTHWEST QUARTER OF THE SOUTHEAST QUARTER OF SECTION 33, TOWNSHIP 25 NORTH, RANGE 6 EAST, W.M., CITY OF SAMMAMISH, KING COUNTY, WASHINGTON, DESCRIBED AS FOLLOWS:

BEGINNING AT THE NORTHEAST CORNER OF THE SOUTH 30.00 FEET OF SAID NORTHWEST QUARTER;
THENCE N 88°49'03" W, ALONG THE NORTH LINE OF SAID SOUTH 30.00 FEET, A DISTANCE OF 255.29 FEET;
THENCE N 08°59'20" W, A DISTANCE OF 7.62 FEET TO THE NORTH LINE OF THE SOUTH 37.50 FEET OF SAID NORTHWEST QUARTER;
THENCE S 88°49'03" E, ALONG SAID NORTH LINE, A DISTANCE OF 156.38 FEET;
THENCE N 80°35'04" E, A DISTANCE OF 51.87 FEET;
THENCE N 44°27'02" E, A DISTANCE OF 27.96 FEET;
THENCE N 01°00'58" E, A DISTANCE OF 46.52 FEET;
THENCE S 88°59'02" E, A DISTANCE OF 30.00 FEET TO THE EAST LINE OF SAID NORTHWEST QUARTER;
THENCE S 01°00'58" W, ALONG SAID EAST LINE, A DISTANCE OF 84.00 FEET TO THE **POINT OF BEGINNING.**

CONTAINING 4,835.7 S.F. MORE OR LESS.

November 17, 2016

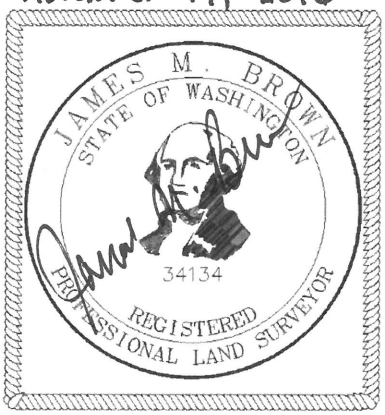

Exhibit 2

EXHIBIT A

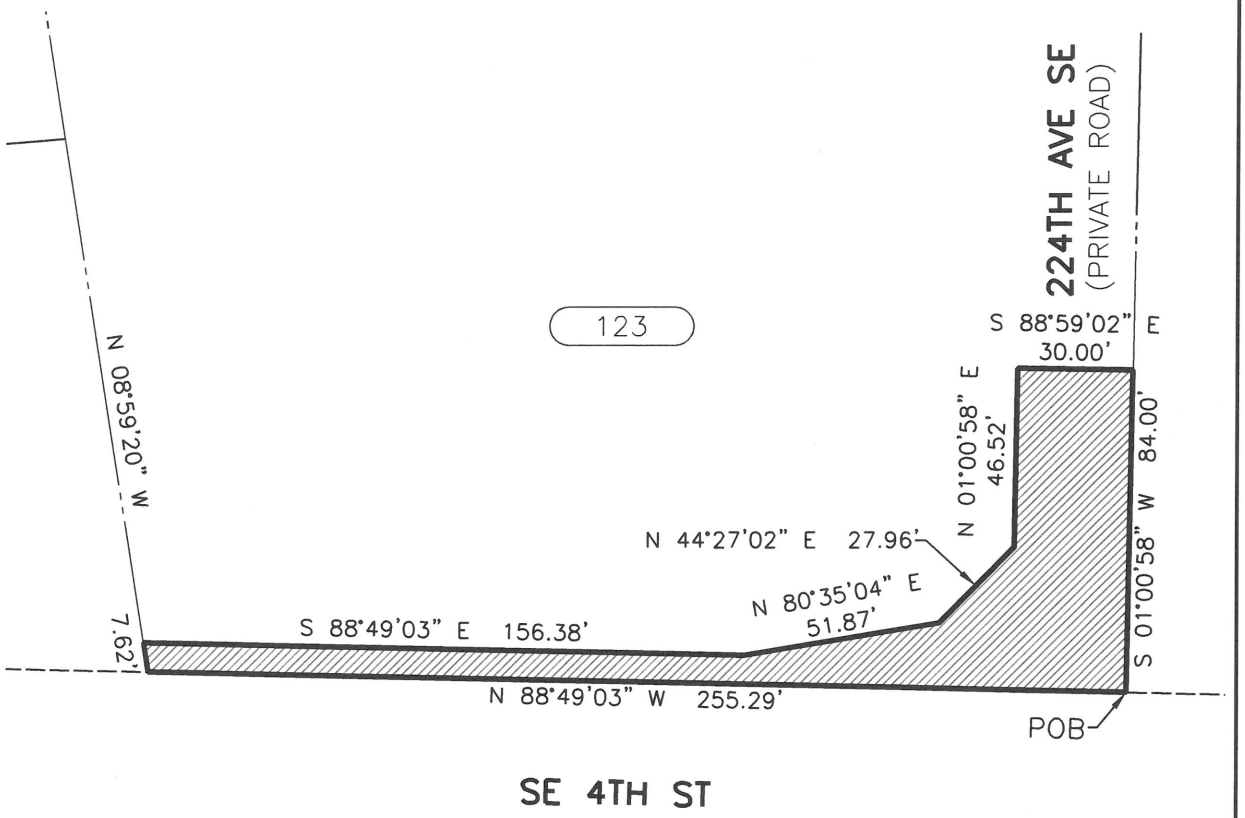

PROJECT PARCEL NO.
123
TOTAL AREA (SF±)
218,097.6
FEE ACQUISITION (SF±)
4,835.7
REMAINDER (SF±)
213,261.9
EASEMENT (SF±)
NA

FEE ACQUISITION

50 25 0 50

SCALE IN FEET

FEE ACQUISITION EXHIBIT MAP
of
TAX LOT PARCEL NO. 3325069068

For: City of Sammamish

DATE: NOV. 17, 2016 Sheet 1 of 1

PERTEET
2707 COLBY AVENUE, SUITE 900
EVERETT, WA 98201
425.252.7700 | 800.615.9900

Exhibit 2

EXHIBIT A
RIGHT OF WAY ACQUISITION
REFERENCE PARCEL NO. 124

THAT PORTION OF THE SOUTHWEST QUARTER OF THE SOUTHEAST QUARTER OF SECTION 33, TOWNSHIP 25 NORTH, RANGE 6 EAST, W.M., CITY OF SAMMAMISH, KING COUNTY, WASHINGTON, DESCRIBED AS FOLLOWS:

BEGINNING AT THE NORTHWEST CORNER OF LOT 3, KING COUNTY SHORT PLAT NO. 577022, RECORDED UNDER RECORDING NO. 7803130563, RECORDS OF KING COUNTY, WASHINGTON;

THENCE S 88°49'03" E, ALONG THE NORTH LINE OF SAID LOT 3, A DISTANCE OF 135.00 FEET TO THE NORTHEAST CORNER OF SAID LOT 3;
THENCE S 01°00'58" W, ALONG THE EAST LINE OF SAID LOT 3, A DISTANCE OF 13.42 FEET;
THENCE N 30°23'56" W, A DISTANCE OF 8.71 FEET;
THENCE N 88°49'03" W, A DISTANCE OF 130.46 FEET TO THE WEST LINE OF SAID LOT 3;
THENCE N 01°00'58" E, ALONG SAID WEST LINE, A DISTANCE OF 6.00 FEET TO THE **POINT OF BEGINNING**.

CONTAINING 826.8 S.F. MORE OR LESS.

November 10, 2016

Exhibit 2

EXHIBIT A

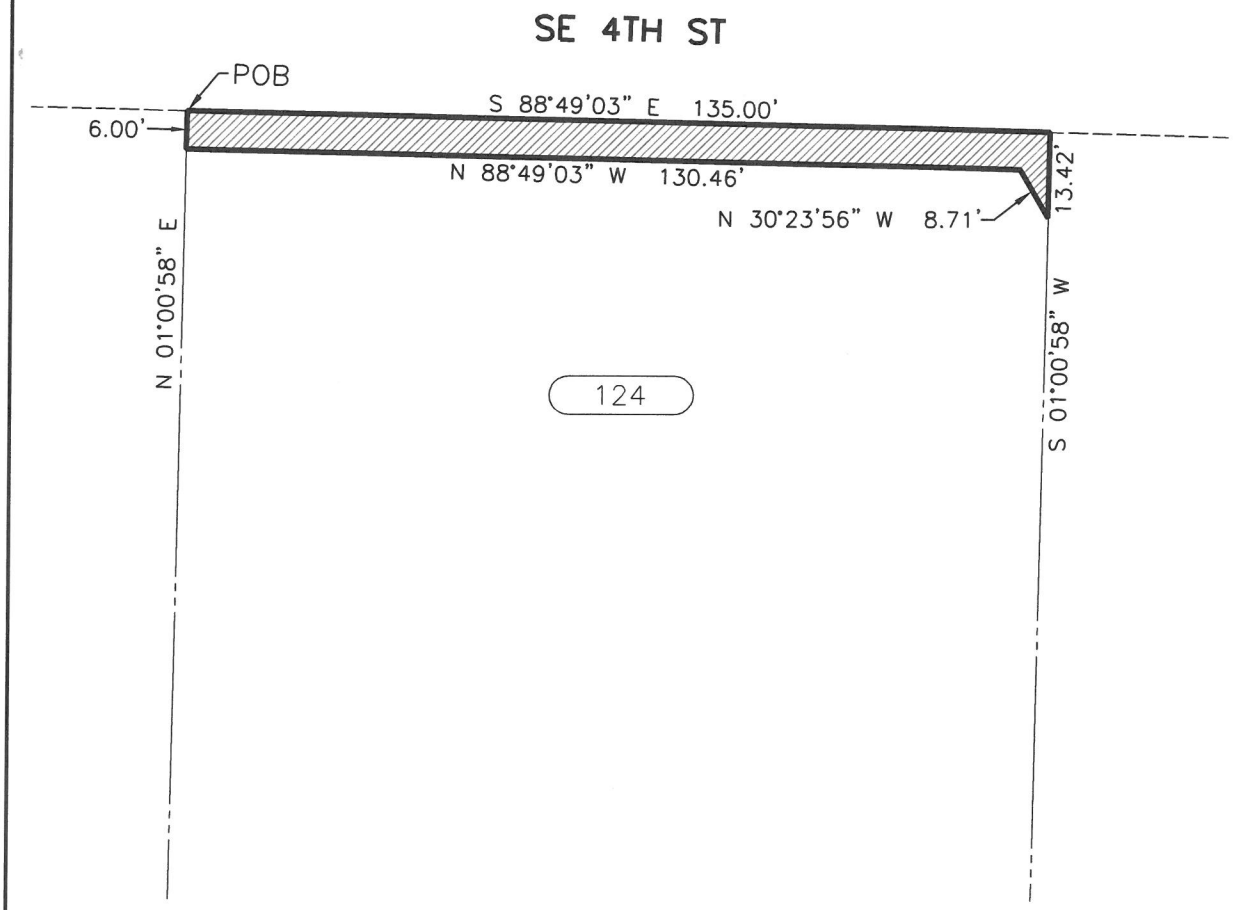

PROJECT PARCEL NO.
124
TOTAL AREA (SF±)
86,866.5
FEE ACQUISITION (SF±)
826.8
REMAINDER (SF±)
86,039.7
EASEMENT (SF±)
NA

FEE ACQUISITION

30 15 0 30

SCALE IN FEET

N

FEE ACQUISITION EXHIBIT MAP
of
TAX LOT PARCEL NO. 3325069024

For: City of Sammamish

DATE: NOV. 9, 2016 Sheet 1 of 1

PERTEET
2707 COLBY AVENUE, SUITE 900
EVERETT, WA 98201
425.252.7700 | 800.615.9900

Exhibit 2

EXHIBIT A
RIGHT OF WAY ACQUISITION
REFERENCE PARCEL NO. 125

THOSE PORTIONS OF THE SOUTHWEST QUARTER OF THE SOUTHEAST QUARTER, AND THE SOUTHEAST QUARTER OF THE SOUTHEAST QUARTER, SECTION 33, TOWNSHIP 25 NORTH, RANGE 6 EAST, W.M., CITY OF SAMMAMISH, KING COUNTY, WASHINGTON, DESCRIBED AS FOLLOWS:

BEGINNING AT THE SOUTHWEST CORNER OF THE NORTH 30.00 FEET OF THE WEST 53 FEET OF THE NORTH HALF OF THE SOUTHWEST QUARTER OF THE SOUTHEAST QUARTER OF SECTION 33, TOWNSHIP 25 NORTH, RANGE 6 EAST, W.M.;

THENCE S 88°49'03" E, ALONG THE SOUTH LINE OF SAID NORTH 30.00 FEET, A DISTANCE OF 200.00 FEET TO THE EAST LINE OF THE WEST 147 FEET OF THE NORTHWEST QUARTER OF THE SOUTHEAST QUARTER OF THE SOUTHEAST QUARTER OF SAID SECTION 33;
THENCE S 01°00'58" W, ALONG SAID EAST LINE, A DISTANCE OF 7.00 FEET;
THENCE S 86°31'07" W, A DISTANCE OF 78.29 FEET;
THENCE S 59°27'58" W, A DISTANCE OF 45.71 FEET;
THENCE S 01°00'58" W, A DISTANCE OF 46.52 FEET;
THENCE N 88°59'02" W, A DISTANCE OF 66.85 FEET;
THENCE N 09°45'26" W, A DISTANCE OF 65.48 FEET;
THENCE N 30°23'56" W, A DISTANCE OF 7.51 FEET TO THE WEST LINE OF THE WEST 53 FEET OF THE NORTH HALF OF THE SOUTHWEST QUARTER OF THE SOUTHEAST QUARTER OF SAID SECTION 33;
THENCE N 01°00'58" E, ALONG SAID WEST LINE, A DISTANCE OF 13.42 FEET TO THE **POINT OF BEGINNING**.

CONTAINING 8,100.3 S.F. MORE OR LESS.

November 17, 2016

Exhibit 2

EXHIBIT A

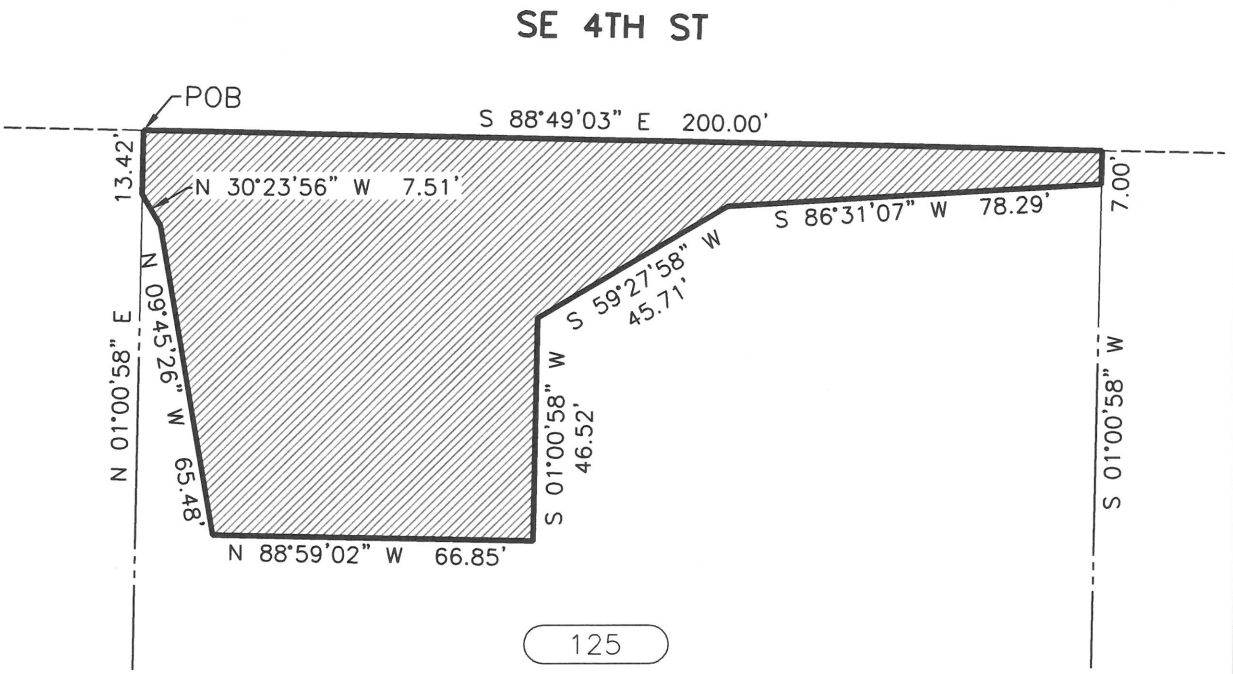

PROJECT PARCEL NO.
125
TOTAL AREA (SF±)
128,793.0
FEE ACQUISITION (SF±)
8,100.3
REMAINDER (SF±)
120,692.7
EASEMENT (SF±)
NA

FEE ACQUISITION

40 20 0 40

SCALE IN FEET

FEE ACQUISITION EXHIBIT MAP
of
TAX LOT PARCEL NO. 3325069085

For: City of Sammamish

DATE: NOV. 17, 2016 Sheet 1 of 1

PERTEET
2707 COLBY AVENUE, SUITE 900
EVERETT, WA 98201
425.252.7700 | 800.615.9900

Exhibit 2

EXHIBIT A
RIGHT OF WAY ACQUISITION
REFERENCE PARCEL NO. 126

THAT PORTION OF THE NORTHEAST QUARTER OF THE SOUTHEAST QUARTER OF SECTION 33, TOWNSHIP 25 NORTH, RANGE 6 EAST, W.M., CITY OF SAMMAMISH, KING COUNTY, WASHINGTON, DESCRIBED AS FOLLOWS:

BEGINNING AT THE SOUTHEAST CORNER OF THE NORTH 200 FEET OF THE SOUTH 230 FEET OF THE WEST HALF OF THE NORTHEAST QUARTER OF THE SOUTHEAST QUARTER OF SAID SECTION 33, LESS THE EAST 440 FEET THEREOF;

THENCE N 88°49'03" W, ALONG THE SOUTH LINE OF SAID NORTH 200 FEET, A DISTANCE OF 227.92 FEET TO THE WEST LINE OF THE NORTHEAST QUARTER OF THE SOUTHEAST QUARTER OF SAID SECTION 33;
THENCE N 01°00'58" E, ALONG SAID WEST LINE, A DISTANCE OF 84.00 FEET;
THENCE S 88°59'02" E, A DISTANCE OF 36.85 FEET;
THENCE S 09°45'26" E, A DISTANCE OF 65.48 FEET;
THENCE S 30°23'56" E, A DISTANCE OF 16.22 FEET TO THE NORTH LINE OF THE SOUTH 6.00 FEET OF THE NORTH 200 FEET OF THE SOUTH 230 FEET OF THE WEST HALF OF THE NORTHEAST QUARTER OF THE SOUTHEAST QUARTER OF SAID SECTION 33;
THENCE S 88°49'03" E, ALONG SAID NORTH LINE, A DISTANCE OF 170.39 FEET TO THE WEST LINE OF THE EAST 440 FEET OF SAID NORTH 200 FEET;
THENCE SOUTH 01°04'42" W, ALONG SAID WEST LINE, A DISTANCE OF 6.00 FEET TO THE **POINT OF BEGINNING.**

CONTAINING 4,864.5 S.F. MORE OR LESS.

November 18, 2016

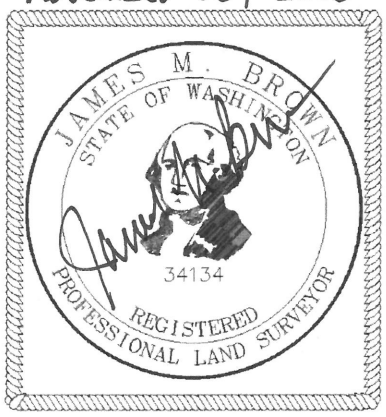

Exhibit 2

EXHIBIT A

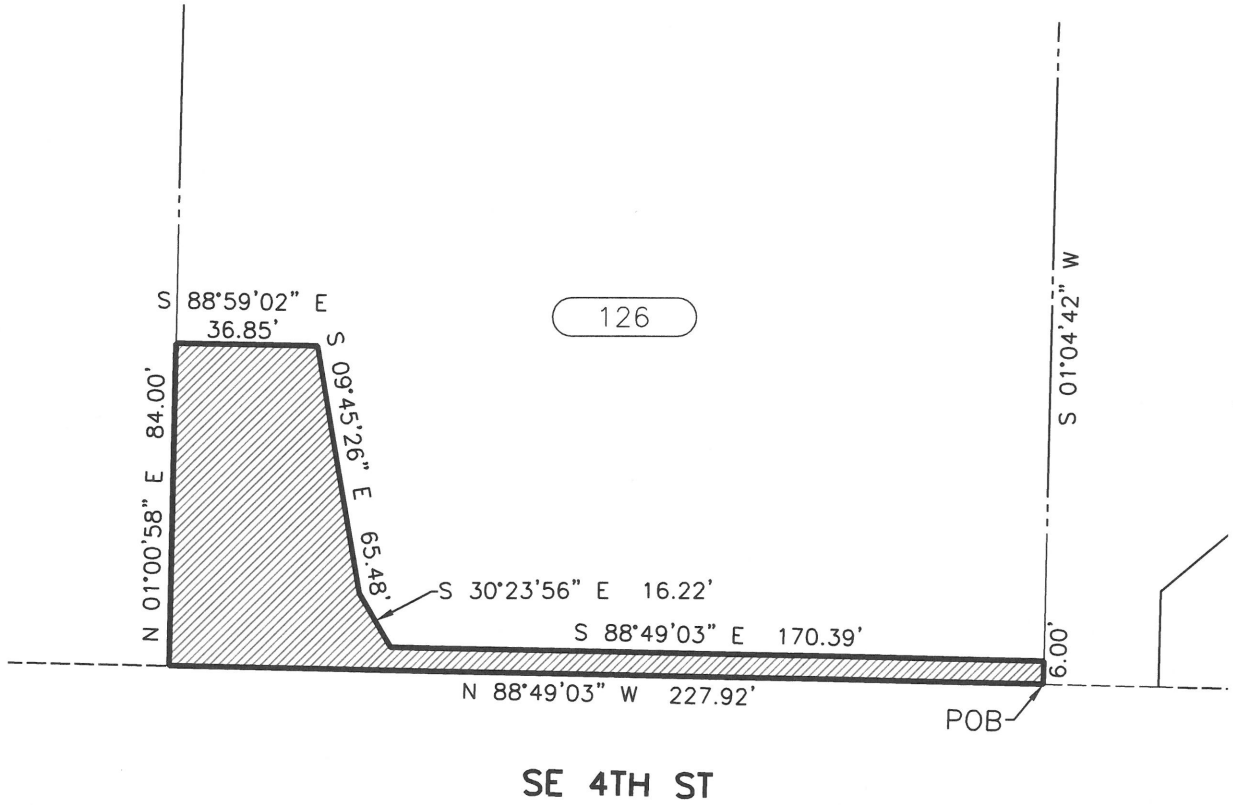

PROJECT PARCEL NO.
126
TOTAL AREA (SF±)
45,599.2
FEE ACQUISITION (SF±)
4,864.5
REMAINDER (SF±)
40,734.7
EASEMENT (SF±)
NA

FEE ACQUISITION

50 25 0 50

SCALE IN FEET

FEE ACQUISITION EXHIBIT MAP
of
TAX LOT PARCEL NO. 3325069157

For: City of Sammamish

DATE: NOV. 17, 2016 Sheet 1 of 1

PERTEET
2707 COLBY AVENUE, SUITE 900
EVERETT, WA 98201
425.252.7700 | 800.615.9900

Exhibit 2

EXHIBIT A
RIGHT OF WAY ACQUISITION
REFERENCE PARCEL NO. 127

THAT PORTION OF THE SOUTHEAST QUARTER OF THE SOUTHEAST QUARTER OF SECTION 33, TOWNSHIP 25 NORTH, RANGE 6 EAST, W.M., CITY OF SAMMAMISH, KING COUNTY, WASHINGTON, DESCRIBED AS FOLLOWS:

THE NORTH 7.00 FEET OF THE FOLLOWING DESCRIBED PARCEL:

THE NORTH 355 FEET OF THE WEST HALF OF THE NORTHWEST QUARTER OF THE SOUTHEAST QUARTER OF THE SOUTHEAST QUARTER OF SECTION 33, TOWNSHIP 25 NORTH, RANGE 6 EAST, W.M.;

EXCEPT THE NORTH 30 FEET FOR COUNTY ROAD;

EXCEPT THE WEST 147 FEET.

CONTAINING 1,308.3 S.F. MORE OR LESS.

November 17, 2016

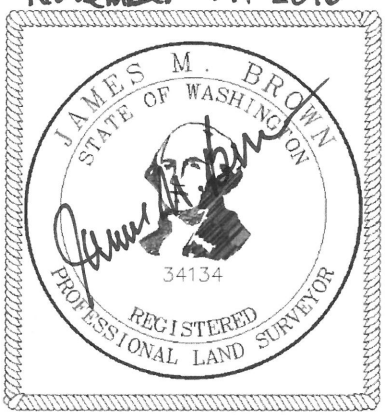

Exhibit 2

EXHIBIT A

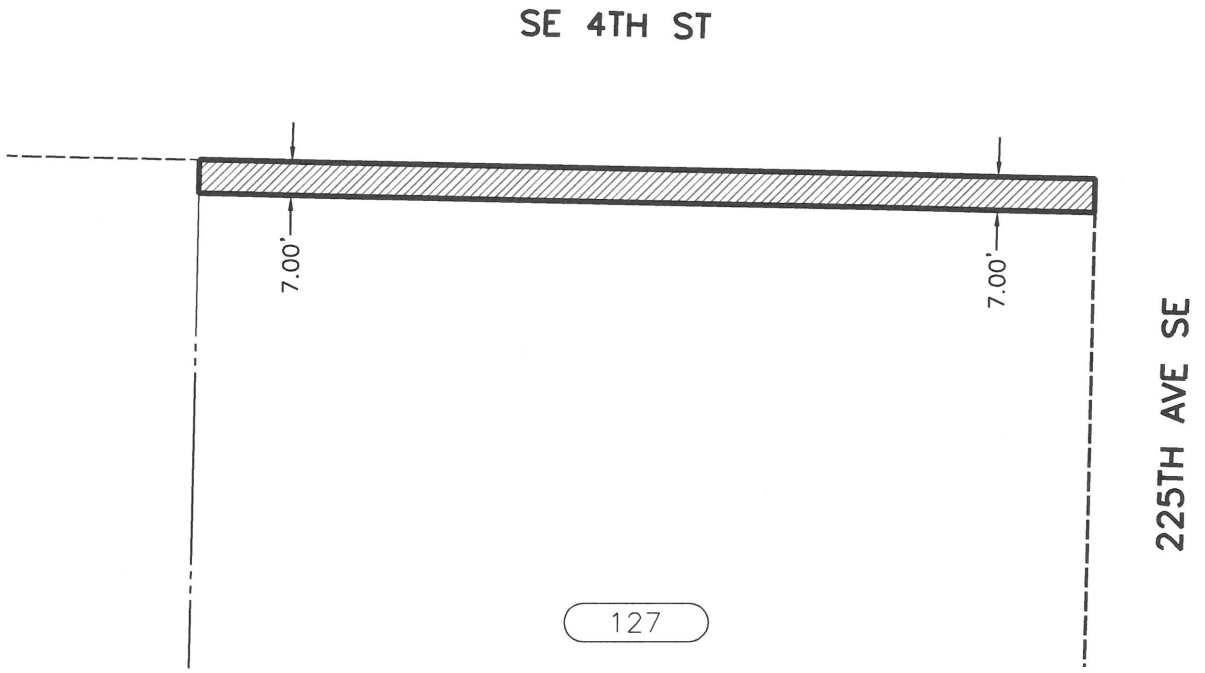

PROJECT PARCEL NO.
127
TOTAL AREA (SF±)
60,679.2
FEE ACQUISITION (SF±)
1308.3
REMAINDER (SF±)
59,370.9
EASEMENT (SF±)
NA

FEE ACQUISITION

40 20 0 40

SCALE IN FEET

N

FEE ACQUISITION EXHIBIT MAP
of
TAX LOT PARCEL NO. 3325069016

For: City of Sammamish

DATE: NOV. 17, 2016 Sheet 1 of 1

PERTEET
2707 COLBY AVENUE, SUITE 900
EVERETT, WA 98201
425.252.7700 | 800.615.9900

Exhibit 2

EXHIBIT A
RIGHT OF WAY ACQUISITION
REFERENCE PARCEL NO. 128

THAT PORTION OF THE NORTHEAST QUARTER OF THE SOUTHEAST QUARTER OF SECTION 33, TOWNSHIP 25 NORTH, RANGE 6 EAST, W.M., CITY OF SAMMAMISH, KING COUNTY, WASHINGTON, DESCRIBED AS FOLLOWS:

THE SOUTH 7.00 FEET OF THE FOLLOWING DESCRIBED PARCEL:

PARCEL 2 OF SHORT PLAT NO. 1275055 RECORDED MARCH 15, 1976 UNDER RECORDING NO. 7603150407 AND REVISION OF SHORT PLAT RECORDED SEPTEMBER 11, 1978 UNDER RECORDING NO. 7809110849, IN KING COUNTY, WASHINGTON.

CONTAINING 210.0 S.F. MORE OR LESS.

November 10, 2016

Exhibit 2

EXHIBIT A

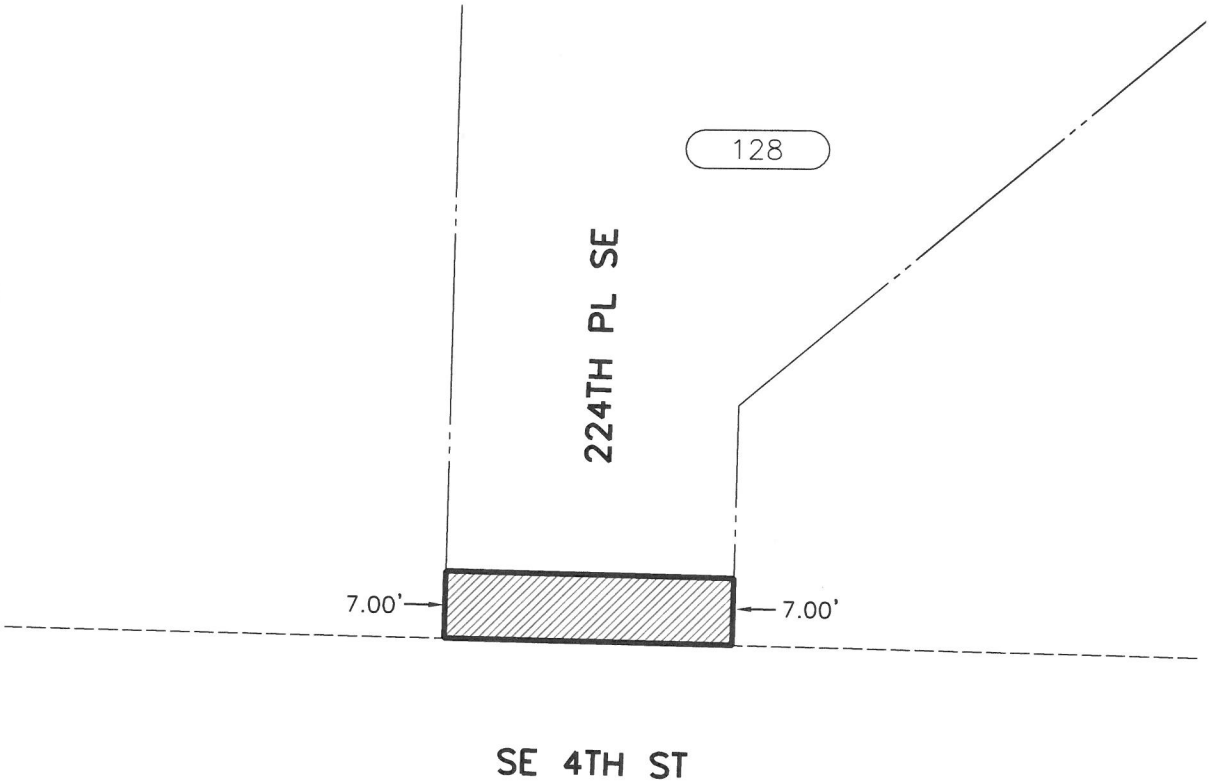

PROJECT PARCEL NO.
128
TOTAL AREA (SF±)
NA
FEE ACQUISITION (SF±)
210.0
REMAINDER (SF±)
NA
EASEMENT (SF±)
NA

FEE ACQUISITION

20 10 0 20

SCALE IN FEET

N

FEE ACQUISITION EXHIBIT MAP
of
TAX LOT PARCEL NO. 3325069110

For: City of Sammamish

DATE: NOV. 8, 2016 Sheet 1 of 1

PERTEET
2707 COLBY AVENUE, SUITE 900
EVERETT, WA 98201
425.252.7700 | 800.615.9900

Exhibit 2

EXHIBIT A
RIGHT OF WAY ACQUISITION
REFERENCE PARCEL NO. 129

THAT PORTION OF THE NORTHEAST QUARTER OF THE SOUTHEAST QUARTER OF SECTION 33, TOWNSHIP 25 NORTH, RANGE 6 EAST, W.M., CITY OF SAMMAMISH, KING COUNTY, WASHINGTON, DESCRIBED AS FOLLOWS:

LOT 1 OF KING COUNTY REVISION SHORT PLAT NO. 1275055, RECORDED UNDER RECORDING NO. 7809110849, BEING A REVISION OF SHORT PLAT RECORDED UNDER RECORDING NO. 7603150407, RECORDS OF KING COUNTY, WASHINGTON.

CONTAINING 35,044.8 S.F. MORE OR LESS.

November 17, 2016

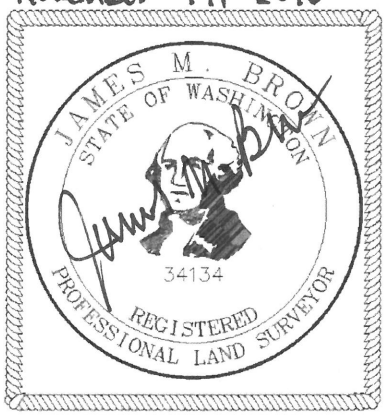

Exhibit 2

EXHIBIT A

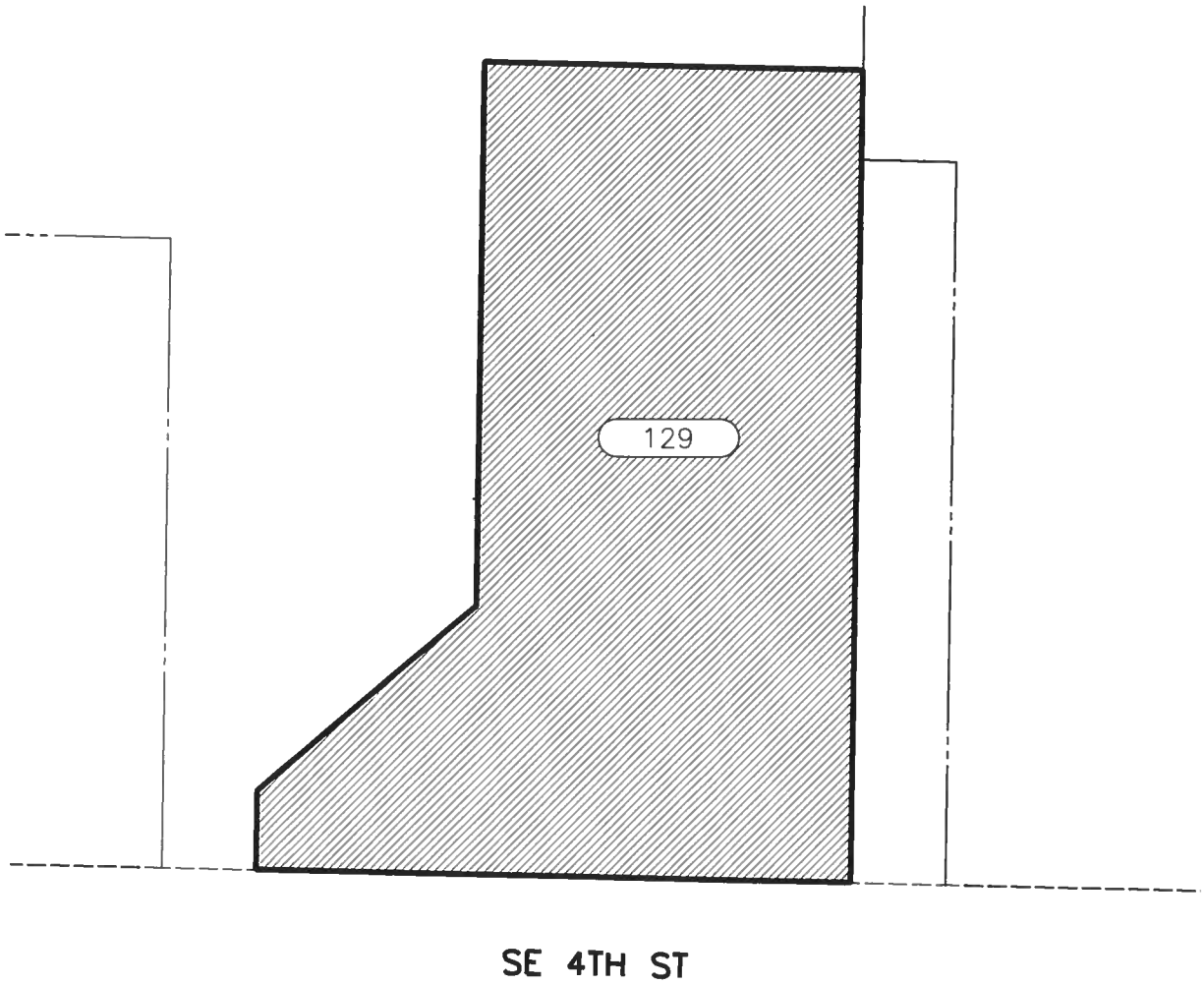

PROJECT PARCEL NO.
129
TOTAL AREA (SF±)
35,044.8
FEE ACQUISITION (SF±)
35,044.8
REMAINDER (SF±)
0
EASEMENT (SF±)
NA

FEE ACQUISITION

60 30 0 60

SCALE IN FEET

N

FEE ACQUISITION EXHIBIT MAP
of
TAX LOT PARCEL NO. 3325069027

For: City of Sammamish

DATE: NOV. 17, 2016 Sheet 1 of 1

PERTEET
2707 COLBY AVENUE, SUITE 900
EVERETT, WA 98201
425.252.7700 | 800.615.9900

Exhibit 2

EXHIBIT A
RIGHT OF WAY ACQUISITION
REFERENCE PARCEL NO. 130

THAT PORTION OF THE SOUTHEAST QUARTER OF THE SOUTHEAST QUARTER OF SECTION 33, TOWNSHIP 25 NORTH, RANGE 6 EAST, W.M., CITY OF SAMMAMISH, KING COUNTY, WASHINGTON, DESCRIBED AS FOLLOWS:

BEGINNING AT THE NORTHWEST CORNER OF LOT 2 OF KING COUNTY SHORT PLAT NO. 1179017, RECORDED UNDER RECORDING NO. 8308121107, BEING A REVISION OF SHORT PLAT RECORDED UNDER RECORDING NO. 8101090669, IN KING COUNTY, WASHINGTON;

THENCE S 88°49'03" E, ALONG THE NORTH LINE OF SAID LOT 2, A DISTANCE OF 188.95 FEET TO THE NORTHEAST CORNER OF SAID LOT 2;
THENCE S 01°04'42" W, ALONG THE EAST LINE OF SAID LOT 2, A DISTANCE OF 10.00 FEET;
THENCE N 88°49'03" W, A DISTANCE OF 40.51 FEET;
THENCE S 78°34'52" W, A DISTANCE OF 32.37 FEET;
THENCE S 44°26'04" W, A DISTANCE OF 27.97 FEET;
THENCE S 01°05'13" W, A DISTANCE OF 46.52 FEET;
THENCE N 88°54'47" W, A DISTANCE OF 66.90 FEET;
THENCE N 09°46'17" W, A DISTANCE OF 68.17 FEET;
THENCE N 30°20'37" W, A DISTANCE OF 13.06 FEET;
THENCE N 88°49'03" W, A DISTANCE OF 11.09 FEET TO THE WEST LINE OF SAID LOT 2;
THENCE N 01°05'13" E, ALONG SAID WEST LINE, A DISTANCE OF 6.00 FEET TO THE **POINT OF BEGINNING**;

CONTAINING 7,771.0 S.F. MORE OR LESS.

November 17, 2016

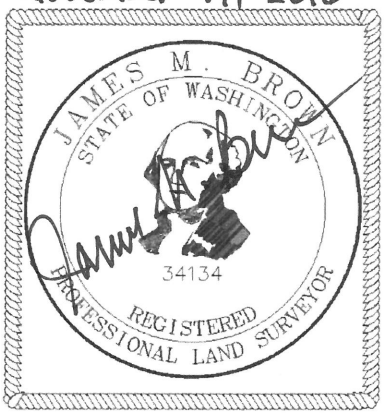

Exhibit 2

EXHIBIT A

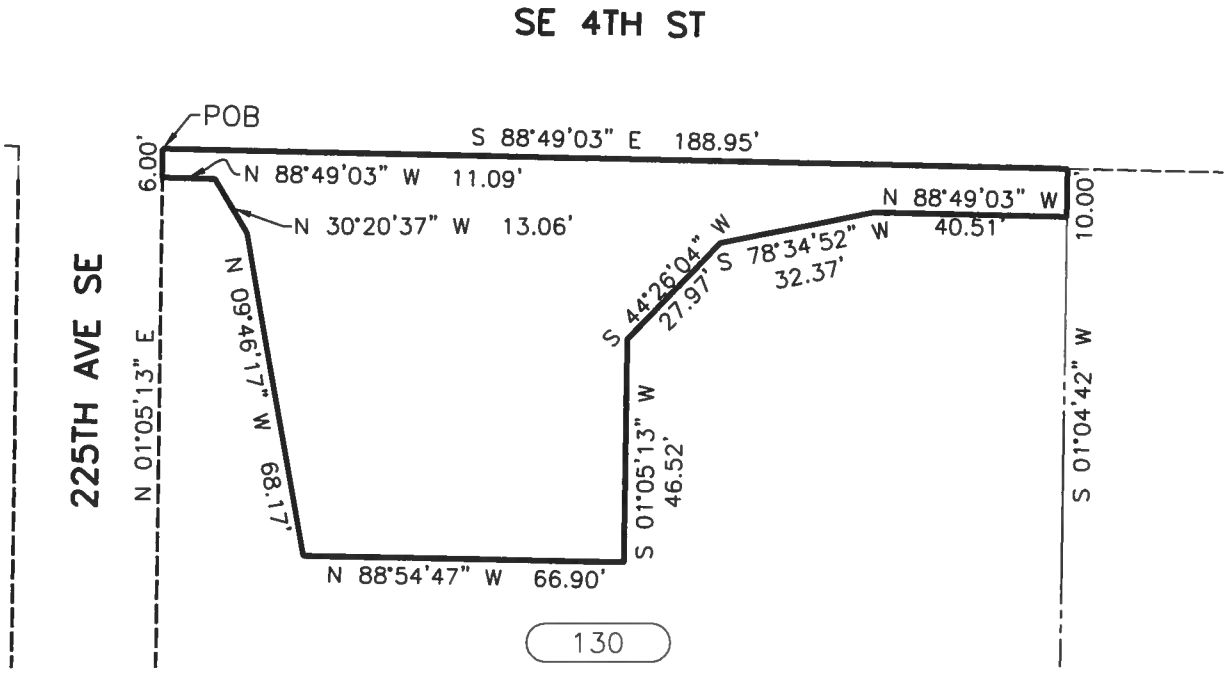

PROJECT PARCEL NO.
130
TOTAL AREA (SF±)
83,734.1
FEE ACQUISITION (SF±)
7,771.0
REMAINDER (SF±)
75,963.1
EASEMENT (SF±)
NA

FEE ACQUISITION

40 20 0 40

SCALE IN FEET

N

FEE ACQUISITION EXHIBIT MAP
of
TAX LOT PARCEL NO. 3325069138

For: City of Sammamish

DATE: NOV. 17, 2016 Sheet 1 of 1

PERTEET
2707 COLBY AVENUE, SUITE 900
EVERETT, WA 98201
425.252.7700 | 800.615.9900

Exhibit 2

EXHIBIT A
RIGHT OF WAY ACQUISITION
REFERENCE PARCEL NO. 131

THAT PORTION OF THE NORTHEAST QUARTER OF THE SOUTHEAST QUARTER OF SECTION 33, TOWNSHIP 25 NORTH, RANGE 6 EAST, W.M., CITY OF SAMMAMISH, KING COUNTY, WASHINGTON, DESCRIBED AS FOLLOWS:

THE WEST 30 FEET OF THE SOUTH 260 FEET OF THE EAST 220 FEET OF THE WEST HALF OF THE NORTHEAST QUARTER OF THE SOUTHEAST QUARTER OF SECTION 33, TOWNSHIP 25 NORTH, RANGE 6 EAST, W.M.;

EXCEPT THE SOUTH 30 FEET THEREOF AS CONDEMNED FOR ROAD PURPOSES IN KING COUNTY SUPERIOR COURT CAUSE NO. 172093.

CONTAINING 6,890.4 S.F. MORE OR LESS.

November 17, 2016

Exhibit 2

EXHIBIT A

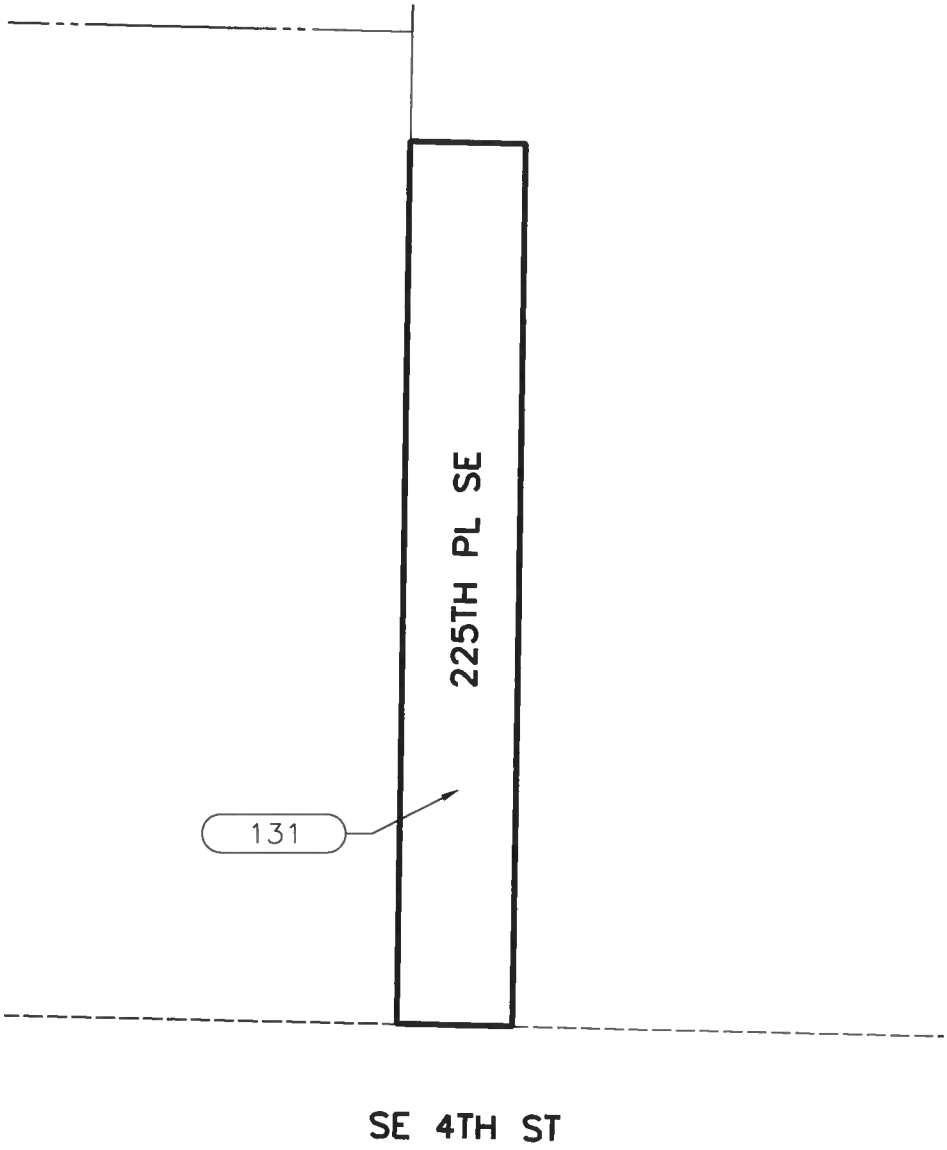

PROJECT PARCEL NO.
131
TOTAL AREA (SF±)
6890.4
FEE ACQUISITION (SF±)
6890.4
REMAINDER (SF±)
0
EASEMENT (SF±)
NA

FEE ACQUISITION

50 25 0 50

SCALE IN FEET

N

FEE ACQUISITION EXHIBIT MAP
of
TAX LOT PARCEL NO. 332506-UNKN

For: City of Sammamish

DATE: NOV. 18, 2016 Sheet 1 of 1

PERTEET
2707 COLBY AVENUE, SUITE 900
EVERETT, WA 98201
425.252.7700 | 800.615.9900

Exhibit 2

EXHIBIT A
RIGHT OF WAY ACQUISITION
REFERENCE PARCEL NO. 132

THAT PORTION OF THE SOUTHEAST QUARTER OF THE SOUTHEAST QUARTER OF SECTION 33, TOWNSHIP 25 NORTH, RANGE 6 EAST, W.M., CITY OF SAMMAMISH, KING COUNTY, WASHINGTON, DESCRIBED AS FOLLOWS:

THE NORTH 10.00 FEET OF THE FOLLOWING DESCRIBED PARCEL:

LOT 1 OF KING COUNTY SHORT PLAT NO. 1179017, RECORDED UNDER RECORDING NO. 8308121107, BEING A REVISION OF SHORT PLAT RECORDED UNDER RECORDING NO. 8101090669, IN KING COUNTY, WASHINGTON;

CONTAINING 1,150.0 S.F. MORE OR LESS.

November 17, 2016

Exhibit 2

EXHIBIT A

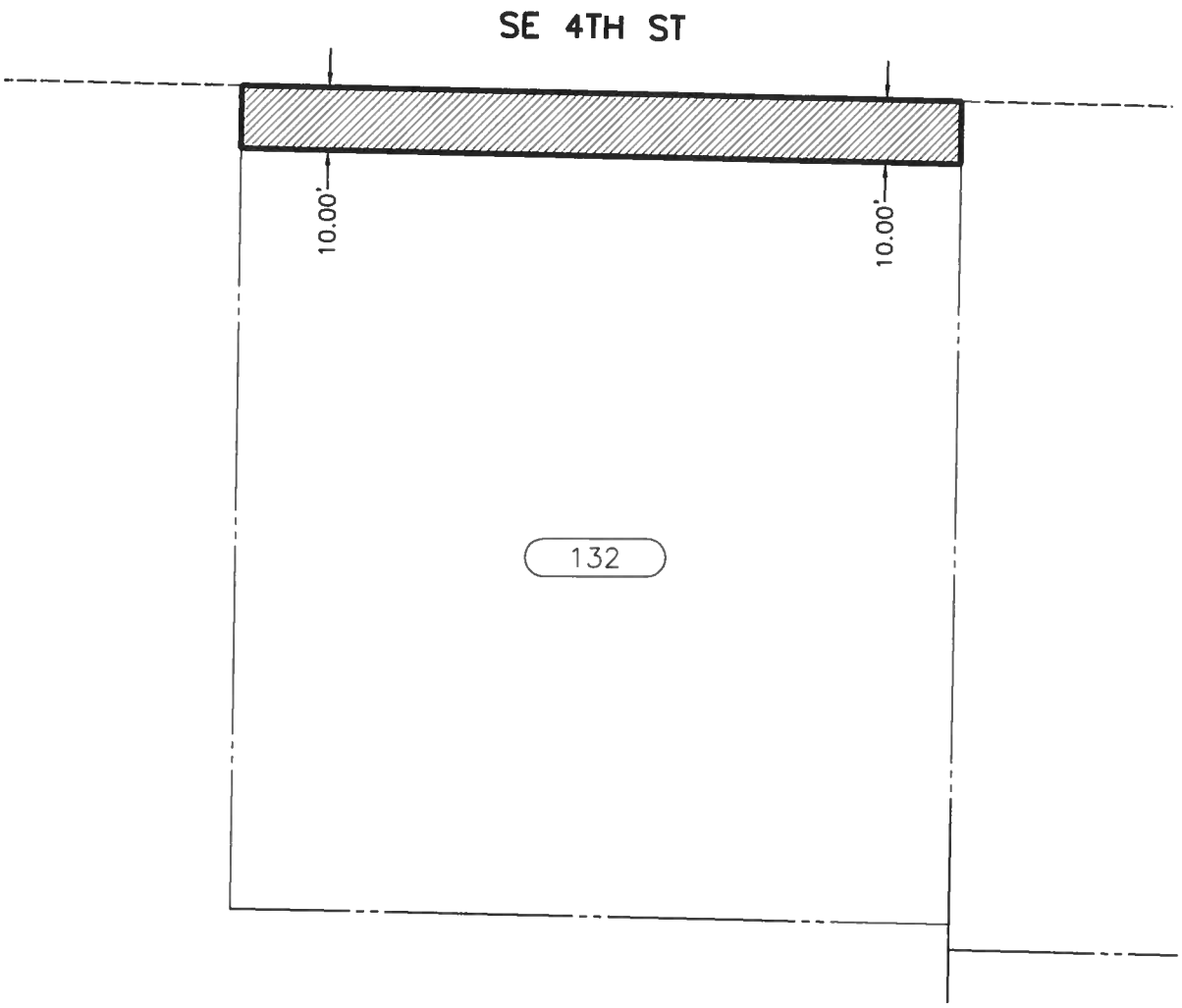

PROJECT PARCEL NO.
132
TOTAL AREA (SF±)
15,057.0
FEE ACQUISITION (SF±)
1,150.0
REMAINDER (SF±)
13,907.0
EASEMENT (SF±)
NA

FEE ACQUISITION

30 15 0 30

SCALE IN FEET

N

FEE ACQUISITION EXHIBIT MAP
of
TAX LOT PARCEL NO. 3325069091

For: City of Sammamish

DATE: NOV. 18, 2016 Sheet 1 of 1

PERTEET
2707 COLBY AVENUE, SUITE 900
EVERETT, WA 98201
425.252.7700 | 800.615.9900

Exhibit 2

EXHIBIT A
RIGHT OF WAY ACQUISITION
REFERENCE PARCEL NO. 133

THAT PORTION OF THE SOUTHEAST QUARTER OF THE SOUTHEAST QUARTER OF SECTION 33, TOWNSHIP 25 NORTH, RANGE 6 EAST, W.M., CITY OF SAMMAMISH, KING COUNTY, WASHINGTON, DESCRIBED AS FOLLOWS:

THE NORTH 10.00 FEET OF THE FOLLOWING DESCRIBED PARCEL:

THE SOUTH 135 FEET OF THE NORTH 165 FEET OF THE WEST 224 FEET OF THE NORTHEAST QUARTER OF THE SOUTHEAST QUARTER OF THE SOUTHEAST QUARTER OF SECTION 33, TOWNSHIP 25 NORTH, RANGE 6 EAST, W.M., KING COUNTY, WASHINGTON.

CONTAINING 2,240.0 S.F. MORE OR LESS.

November 17, 2016

Exhibit 2

EXHIBIT A

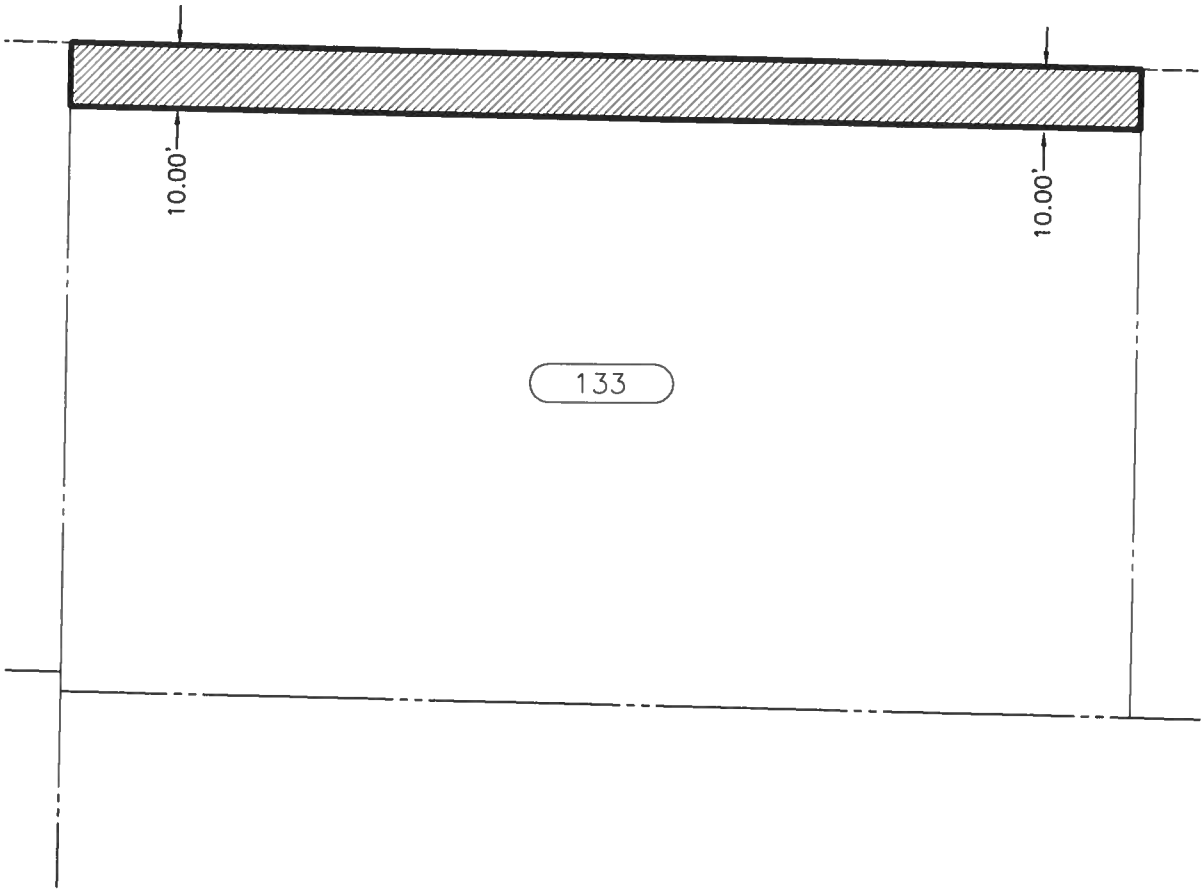

PROJECT PARCEL NO.
133
TOTAL AREA (SF±)
30,240.1
FEE ACQUISITION (SF±)
2,240.0
REMAINDER (SF±)
28,000.1
EASEMENT (SF±)
NA

FEE ACQUISITION

40 20 0 40

SCALE IN FEET

N

FEE ACQUISITION EXHIBIT MAP
of
TAX LOT PARCEL NO. 3325069109

For: City of Sammamish

DATE: NOV. 18, 2016 Sheet 1 of 1

PERTEET
2707 COLBY AVENUE, SUITE 900
EVERETT, WA 98201
425.252.7700 | 800.615.9900

Exhibit 2

EXHIBIT A
RIGHT OF WAY ACQUISITION
REFERENCE PARCEL NO. 134

THAT PORTION OF THE SOUTHEAST QUARTER OF THE SOUTHEAST QUARTER OF SECTION 33, TOWNSHIP 25 NORTH, RANGE 6 EAST, W.M., CITY OF SAMMAMISH, KING COUNTY, WASHINGTON, DESCRIBED AS FOLLOWS:

THE NORTH 22.00 FEET OF THE FOLLOWING DESCRIBED PARCEL:

THE SOUTH 135 FEET OF THE NORTH 165 FEET OF THE EAST 112 FEET OF THE WEST 336 FEET OF THE NORTHEAST QUARTER OF THE SOUTHEAST QUARTER OF THE SOUTHEAST QUARTER OF SECTION 33, TOWNSHIP 25 NORTH, RANGE 6 EAST, W.M., KING COUNTY, WASHINGTON.

CONTAINING 2,464.0 S.F. MORE OR LESS.

November 17, 2016

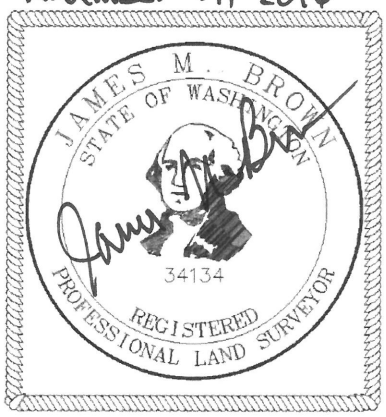

Exhibit 2

EXHIBIT A

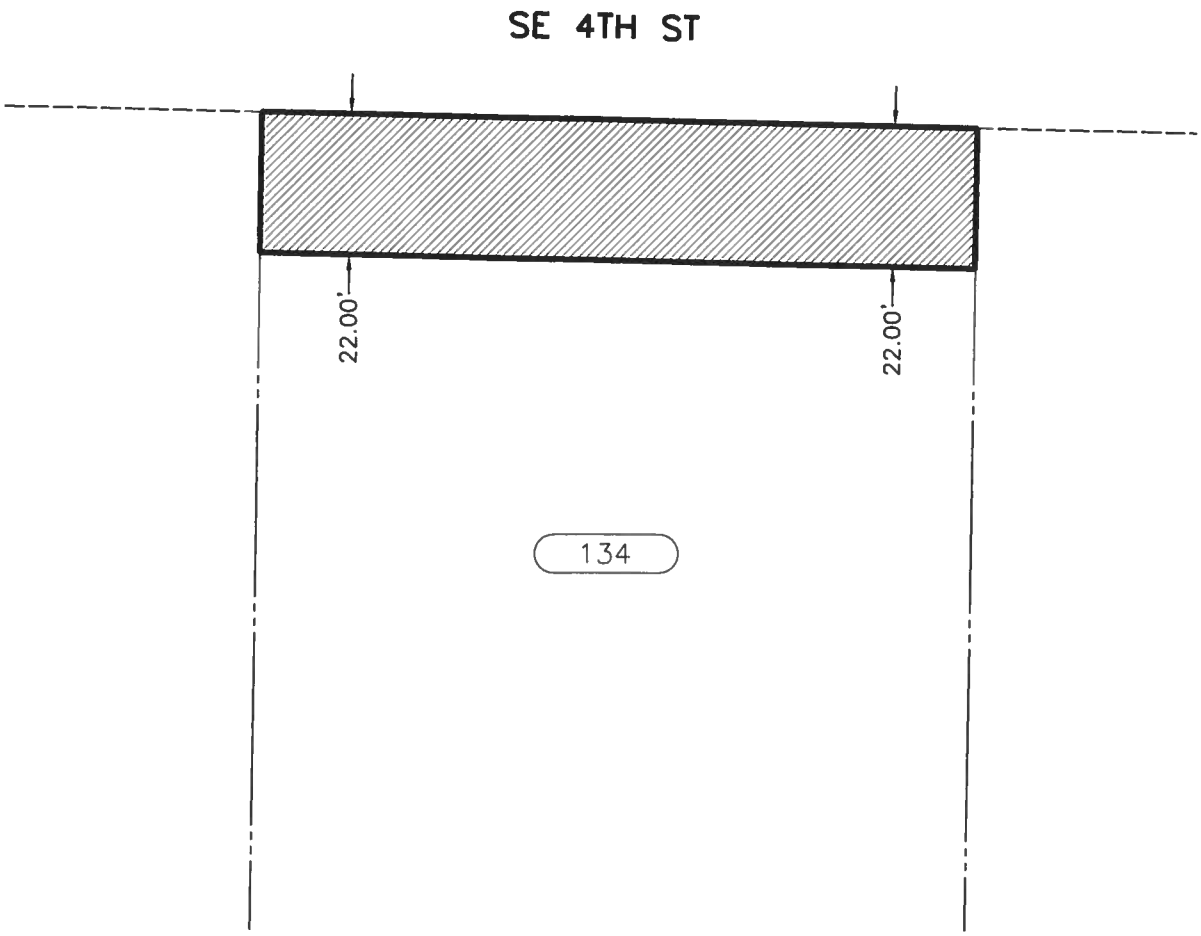

PROJECT PARCEL NO.
134
TOTAL AREA (SF±)
15,120.0
FEE ACQUISITION (SF±)
2,464.0
REMAINDER (SF±)
12,656.0
EASEMENT (SF±)
NA

FEE ACQUISITION

30 15 0 30

SCALE IN FEET

N

FEE ACQUISITION EXHIBIT MAP
of
TAX LOT PARCEL NO. 3325069164

For: City of Sammamish

DATE: NOV. 18, 2016 Sheet 1 of 1

PERTEET
2707 COLBY AVENUE, SUITE 900
EVERETT, WA 98201
425.252.7700 | 800.615.9900

Exhibit 2

EXHIBIT A
RIGHT OF WAY ACQUISITION
REFERENCE PARCEL NO. 135

THAT PORTION OF THE SOUTHEAST QUARTER OF THE SOUTHEAST QUARTER OF SECTION 33, TOWNSHIP 25 NORTH, RANGE 6 EAST, W.M., CITY OF SAMMAMISH, KING COUNTY, WASHINGTON, DESCRIBED AS FOLLOWS:

THE NORTH 22.00 FEET OF THE FOLLOWING DESCRIBED PARCEL:

BEGINNING AT THE NORTHEAST CORNER OF THE SOUTHEAST QUARTER OF THE SOUTHEAST QUARTER OF SAID SECTION 33;
THENCE NORTH 88°49'39" WEST 114.21 FEET TO THE POINT OF BEGINNING;
THENCE SOUTH 25°13'28" WEST 180.71 FEET TO A POINT ON THE SOUTH LINE OF THE NORTH 165 FEET THEREOF;
THENCE NORTH 88°49'39" WEST 479.70 FEET TO THE WEST LINE OF THE NORTHEAST QUARTER OF THE SOUTHEAST QUARTER OF THE SOUTHEAST QUARTER;
THENCE NORTH 01°06'20" EAST ALONG THE WEST LINE 165 FEET TO THE NORTH LINE OF SAID NORTHEAST QUARTER;
THENCE SOUTH 88°49'39" EAST ALONG THE NORTH LINE 553.54 FEET, MORE OR LESS, TO THE POINT OF BEGINNING;

EXCEPT THE WEST 336 FEET; AND

EXCEPT THE NORTH 30 FEET THEREOF.

CONTAINING 4,384.6 S.F. MORE OR LESS.

November 17, 2016

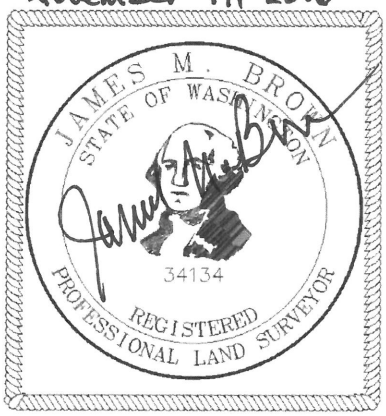

Exhibit 2

EXHIBIT A

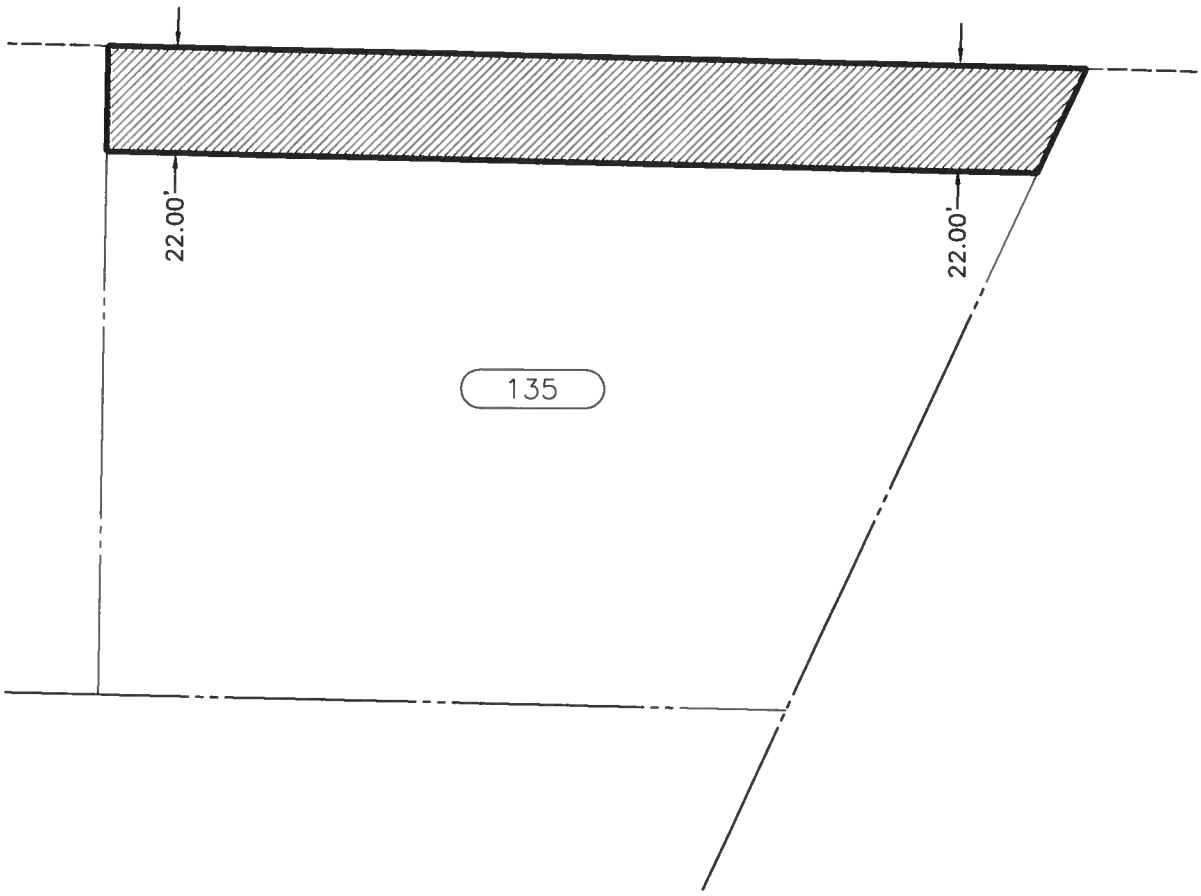

PROJECT PARCEL NO.
135
TOTAL AREA (SF±)
23,487.0
FEE ACQUISITION (SF±)
4,384.6
REMAINDER (SF±)
19,102.4
EASEMENT (SF±)
NA

FEE ACQUISITION

40 20 0 40

SCALE IN FEET

N

FEE ACQUISITION EXHIBIT MAP
of
TAX LOT PARCEL NO. 3325069086

For: City of Sammamish

DATE: NOV. 18, 2016 Sheet 1 of 1

PERTEET
2707 COLBY AVENUE, SUITE 900
EVERETT, WA 98201
425.252.7700 | 800.615.9900

Exhibit 2

EXHIBIT A
RIGHT OF WAY ACQUISITION
REFERENCE PARCEL NO. 136

THAT PORTION OF THE SOUTHEAST QUARTER OF THE SOUTHEAST QUARTER OF SECTION 33, TOWNSHIP 25 NORTH, RANGE 6 EAST, W.M., CITY OF SAMMAMISH, KING COUNTY, WASHINGTON, DESCRIBED AS FOLLOWS:

COMMENCING AT THE NORTHEAST CORNER OF THE SOUTHEAST QUARTER OF THE SOUTHEAST QUARTER OF SAID SECTION 33;
THENCE N 88°49'03" W, ALONG THE NORTH LINE OF SAID SOUTHEAST QUARTER, A DISTANCE OF 114.21 FEET;
THENCE S 25°14'10" W, A DISTANCE OF 32.85 FEET TO THE SOUTH LINE OF THE NORTH 30.00 FEET OF SAID SOUTHEAST QUARTER, AND THE **POINT OF BEGINNING**;
THENCE CONTINUING S 25°14'10" W, A DISTANCE OF 21.90 FEET;
THENCE S 88°49'03" E, A DISTANCE OF 66.68 FEET;
THENCE S 56°07'32" E, A DISTANCE OF 14.38 FEET TO THE WESTERLY MARGIN OF 228TH AVENUE SOUTHEAST;
THENCE N 13°14'59" W, ALONG SAID WESTERLY MARGIN, A DISTANCE OF 28.67 FEET TO THE SOUTH LINE OF THE NORTH 30.00 FEET OF SAID SOUTHEAST QUARTER;
THENCE N 88°49'03" W, ALONG SAID SOUTH LINE, A DISTANCE OF 62.72 FEET TO THE **POINT OF BEGINNING.**

CONTAINING 1,434.3 S.F. MORE OR LESS.

November 17, 2016

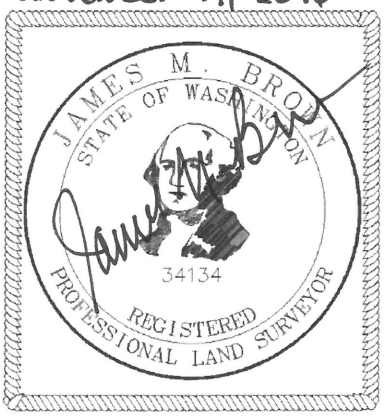

Exhibit 2

EXHIBIT A

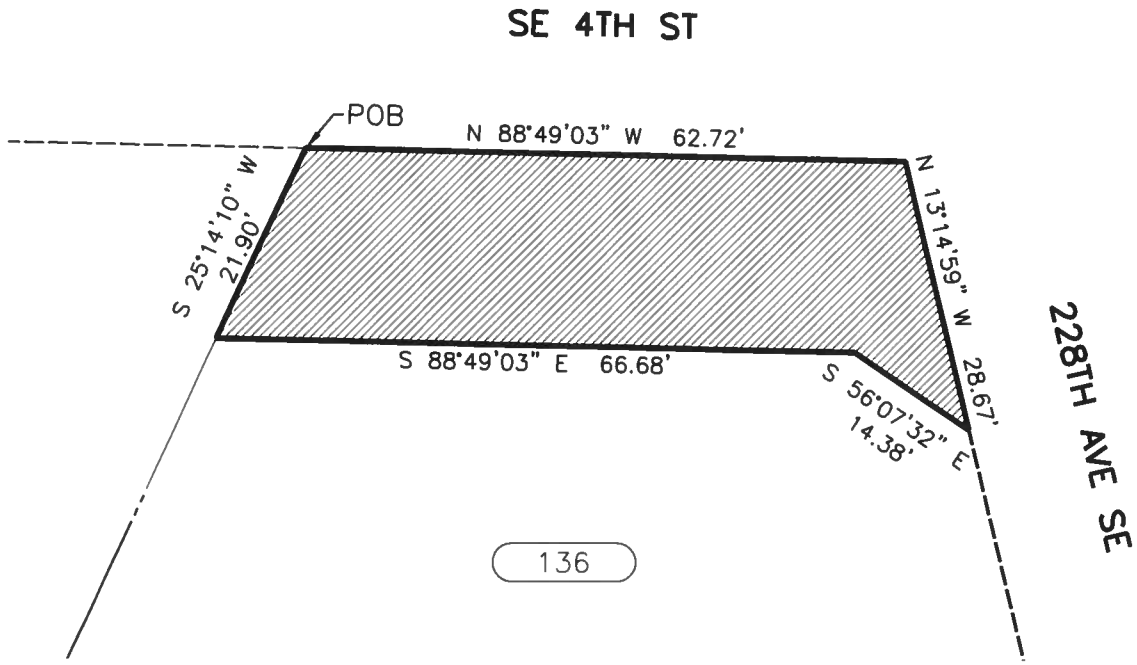

PROJECT PARCEL NO.
136
TOTAL AREA (SF±)
NA
FEE ACQUISITION (SF±)
1,434.3
REMAINDER (SF±)
NA
EASEMENT (SF±)
NA

FEE ACQUISITION

20 10 0 20

SCALE IN FEET

FEE ACQUISITION EXHIBIT MAP
of
TAX LOT PARCEL NO. 3325069017

For: City of Sammamish

DATE: NOV. 18, 2016 Sheet 1 of 1

PERTEET
2707 COLBY AVENUE, SUITE 900
EVERETT, WA 98201
425.252.7700 | 800.615.9900

Exhibit 2

EXHIBIT A
RIGHT OF WAY ACQUISITION
REFERENCE PARCEL NO. 137

THAT PORTION OF THE NORTHEAST QUARTER OF THE SOUTHEAST QUARTER OF SECTION 33, TOWNSHIP 25 NORTH, RANGE 6 EAST, W.M., CITY OF SAMMAMISH, KING COUNTY, WASHINGTON, DESCRIBED AS FOLLOWS:

COMMENCING AT THE SOUTHWEST CORNER OF LOT 3, CITY OF SAMMAMISH BINDING SITE PLAN FILE NO. BSP2015-00314, ACCORDING TO THE PLAT THEREOF RECORDED IN VOLUME 273 OF PLATS, PAGES 86 THROUGH 91, ALSO RECORDED UNDER RECORDING NO. 20160509900002, RECORDS OF KING COUNTY, WASHINGTON;

THENCE S 88°49'03" E, ALONG THE SOUTH LINE OF SAID LOT 3, A DISTANCE OF 4.00 FEET;
THENCE N 01°04'26" E, PARALLEL WITH THE WEST LINE OF SAID LOT 3, A DISTANCE OF 6.00 FEET TO THE **POINT OF BEGINNING**;

THENCE S 88°49'03" E, A DISTANCE OF 24.95 FEET TO THE BEGINNING OF A NON-TANGENT CURVE, CONCAVE TO THE NORTHEAST, HAVING A RADIUS OF 25.00 FEET, THE RADIAL CENTER OF WHICH BEARS N 01°10'57" E;
THENCE ALONG THE ARC OF SAID CURVE, THROUGH A CENTRAL ANGLE OF 89°53'29", A DISTANCE OF 39.22 FEET;
THENCE S 01°04'26" W, A DISTANCE OF 24.95 FEET TO THE **POINT OF BEGINNING**.

CONTAINING 133.5 S.F. MORE OR LESS.

November 18, 2016

Exhibit 2

EXHIBIT A

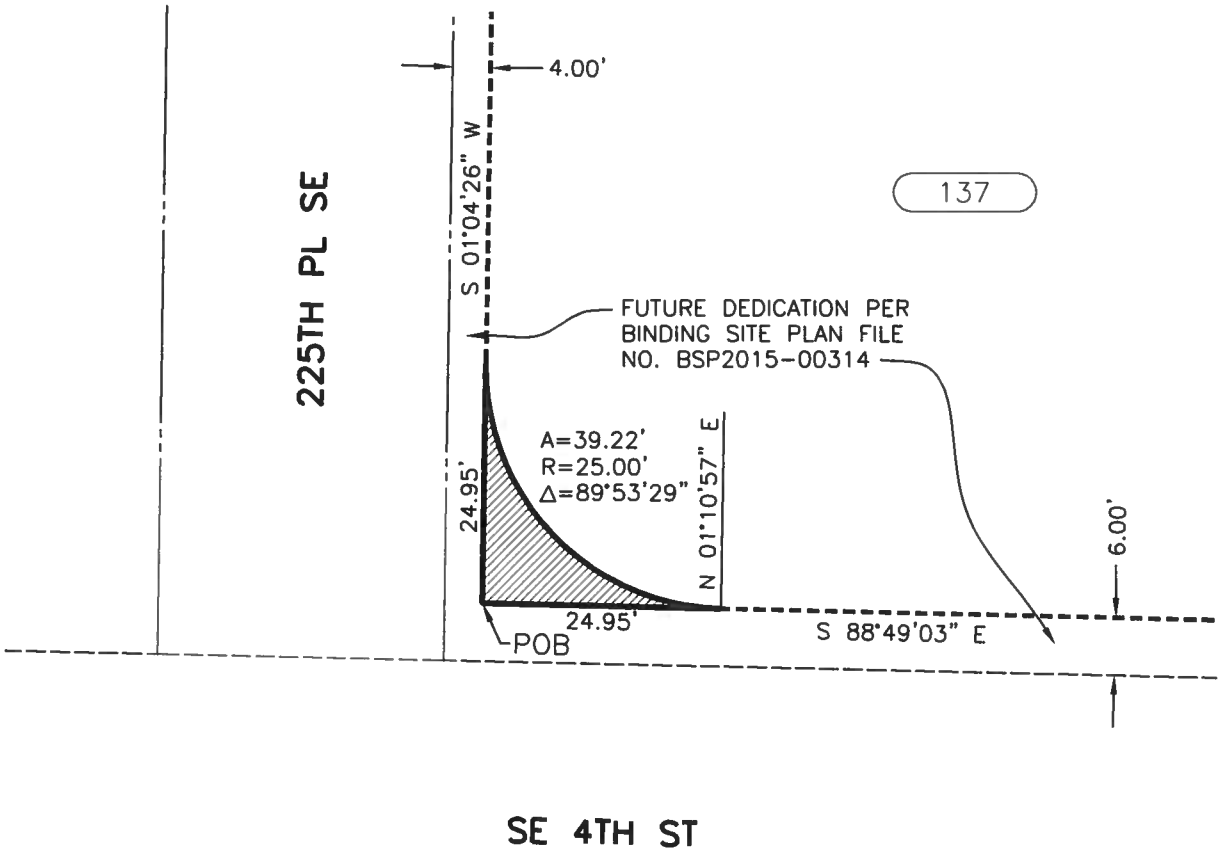

PROJECT PARCEL NO.
137
TOTAL AREA (SF±)
77,910.3
FEE ACQUISITION (SF±)
133.5
REMAINDER (SF±)
77,776.8
EASEMENT (SF±)
NA

FEE ACQUISITION

20 10 0 20

SCALE IN FEET

FEE ACQUISITION EXHIBIT MAP
of
TAX LOT PARCEL NO. 7527050030

For: City of Sammamish

DATE: NOV. 18, 2016 Sheet 1 of 1

PERTEET
2707 COLBY AVENUE, SUITE 900
EVERETT, WA 98201
425.252.7700 | 800.615.9900

Exhibit 3

EXHIBIT B

SE 4th Property Acquisition

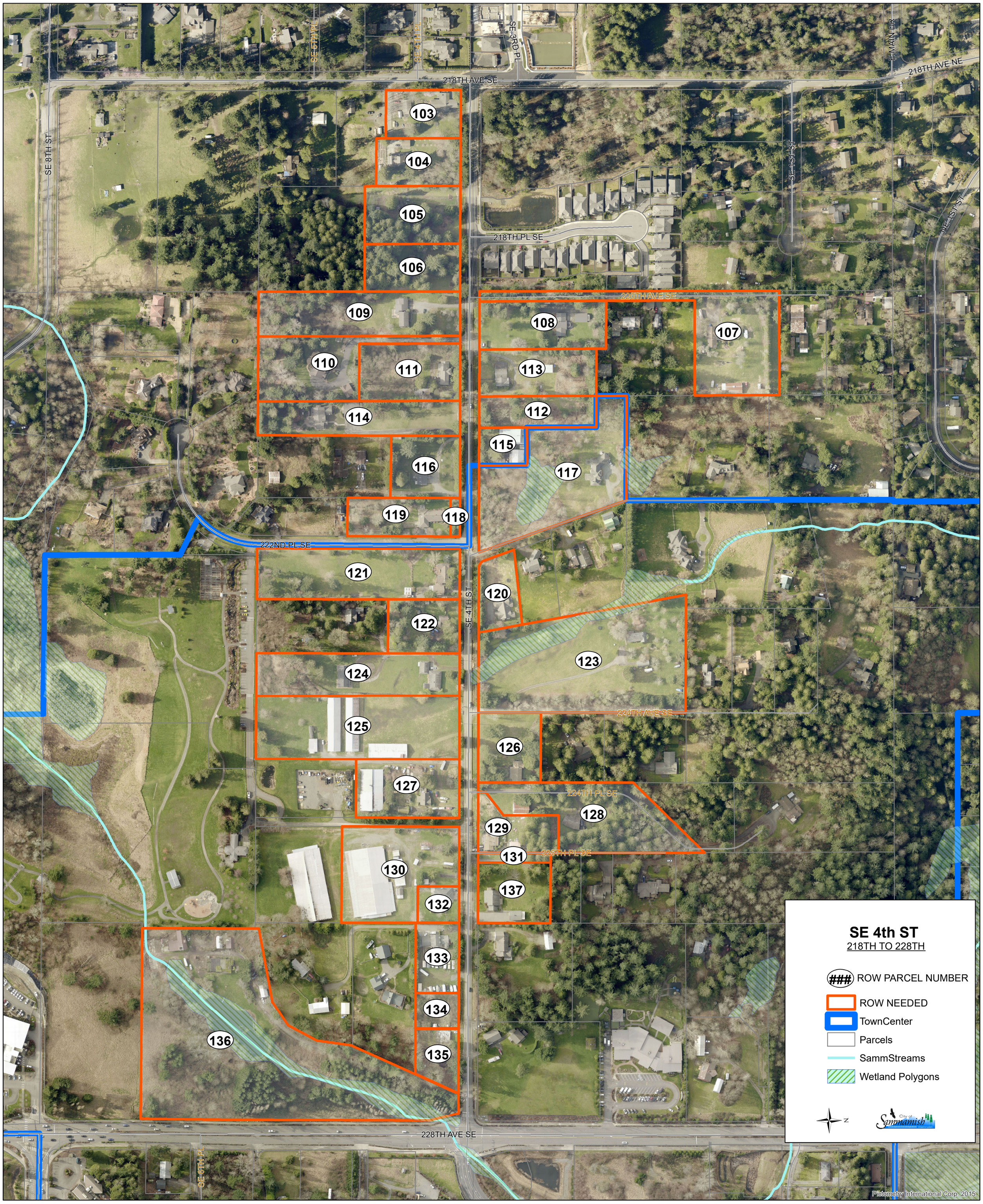

JG: SE 4th AB Acquisition Exhibit.mxd 11/29/2016

Exhibit 4

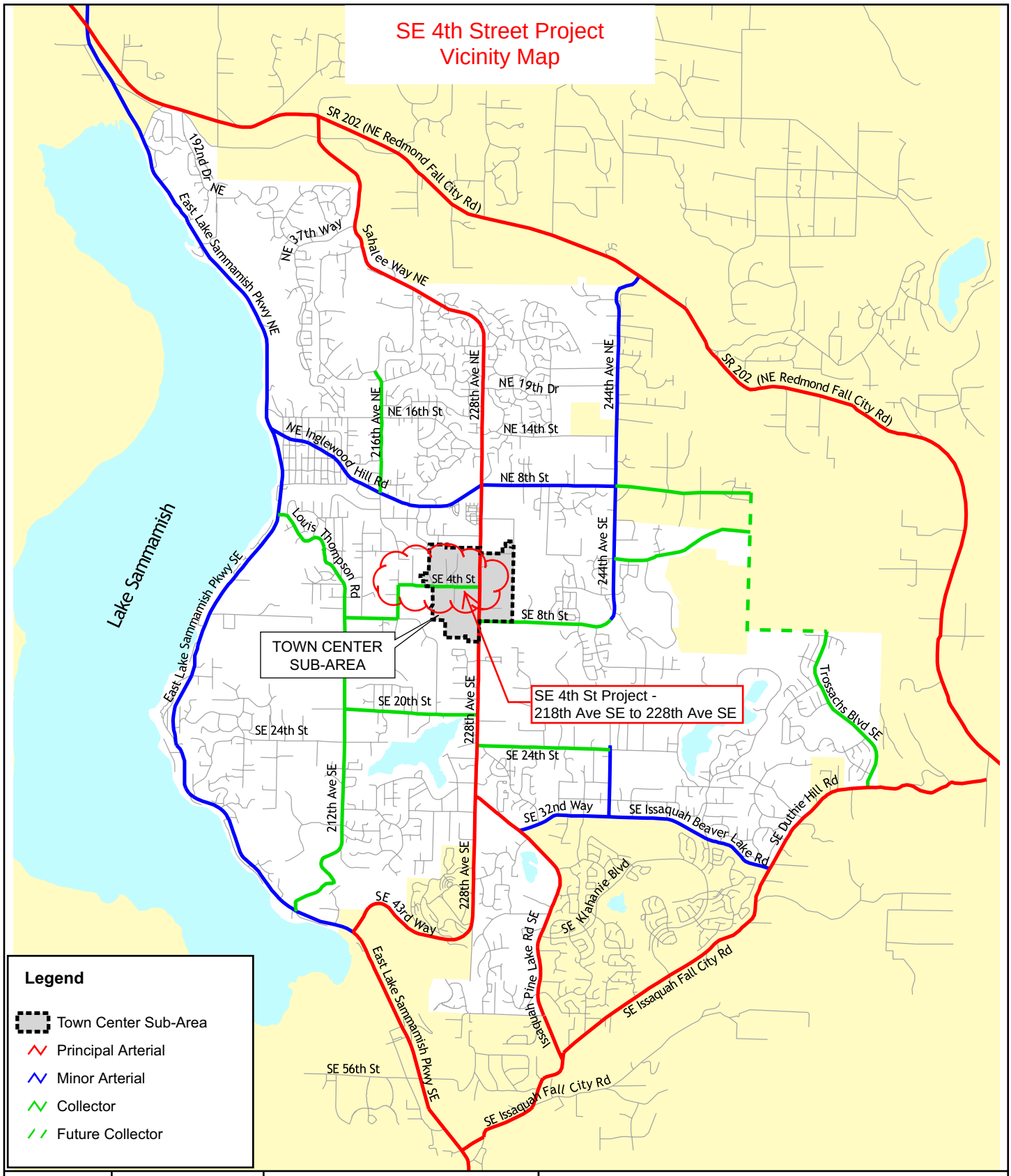

File name: Fig00_rdwyclass.ai
Created/last edited by: JAB
Date last updated: 03/22/06
Reference: 25164

North

Miles
0.5 0.25 0 0.5

Map data are the property of the sources listed below.
Inaccuracies may exist, and Adolfson Associates, Inc. implies no warranties or guarantees regarding any aspect of data depiction.
SOURCE: King County GIS, 2002 and City of Sammamish, 2002.

ADOLFSON

EXISTING ROADWAY FUNCTIONAL CLASSIFICATIONS

SAMMAMISH TOWN CENTER EXISTING CONDITIONS REPORT

CITY OF SAMMAMISH, WASHINGTON

Exhibit 4

City Council Agenda Bill

Meeting Date: **December 6, 2016** Date Submitted: 11/30/2016

Originating Department: Public Works

Clearances:

- ☑ Attorney
- ☐ Admin Services
- ☑ City Manager
- ☐ Community Development
- ☐ Finance & IT
- ☐ Parks & Recreation
- ☐ Public Safety
- ☑ Public Works

Subject: Public Hearing for Ordinance for adoption of 2016 Public Works Standards

Action Required: Continue and Close Public Hearing and adopt Ordinance that adopts the 2016 Public Works Standards.

Exhibits:

1. Ordinance
2. Final Draft Public Works Standards Dated 11-09-16
3. Draft Standard Drawings Dated 11-09-16
4. Standard Drawing List
5. Summary of Proposed Changes for Final PWS
6. Deviation Review Form
7. Master Builders' Roadway Section Exhibit
8. Councilmember Comment Responses
9. Street Tree Recommendations

Budget: No Budget Impact

Summary Statement:

The department of Public Works is currently completing the draft of the 2016 Public Works Standards for adoption by the City Council.

Background:

The current Interim PWS were adopted on April 19, 2000 by Ordinance No. O2000-60. Significant growth in development, density and population since adoption has made it difficult for staff and the public to adhere to them. As a result, substantial time and resources are spent requesting and granting variances to the Standards. Staff has discussed the items with the City Council on several occasions, met with members of the Master Builders Association to review comments prior to the next council meeting and provided internal review of the document.

Financial Impact: **There is no financial impact directly associated with adoption of this ordinance.**

Recommended Motion: Continue and close the Public Hearing to address comments from Council and the public, and move to adopt the ordinance.

Exhibit 1

CITY OF SAMMAMISH
WASHINGTON
ORDINANCE NO. O2016-_____

AN ORDINANCE OF THE CITY OF SAMMAMISH, WASHINGTON, AMENDING CHAPTER 14.01 OF THE SAMMAMISH MUNICIPAL CODE, PUBLIC WORKS STANDARDS, PROVIDING FOR SEVERABLILTY, AND ESTABLISHING AN EFFECTIVE DATE

WHEREAS, the City Council earlier this year completed its deliberations and adopted revisions to the City's Comprehensive Plan; and

WHEREAS, the City has also undertaken a review of its Public Works Standards, including referral of the Standards to the Planning Commission for a public hearing and recommendation to the City Council; and

WHEREAS, the 2016 Public Works Standards are intended to become effective on January 1, 2017; and

WHEREAS, the City has conducted an environmental review of the Public Works Standards in accordance with the State Environmental Policy Act, Chapter 43.21C RCW; and;

WHEREAS, the City Council conducted a public hearing to receive comments on the proposed public works standards;

NOW, THEREFORE, THE CITY COUNCIL OF THE CITY OF SAMMAMISH, WASHINGTON, DO ORDAIN AS FOLLOWS:

Section 1. Public Works Standards, Amended. Chapter 14.01 of the Sammamish Municipal Code is hereby amended to read in its entirety in the form set forth on Attachment A.

Section 2. Severability. Should any section, paragraph, sentence, clause or phrase of this Ordinance, or its application to any person or circumstance, be declared unconstitutional or otherwise invalid for any reason, or should any portion of this Ordinance be pre-empted by state or federal law or regulation, such decision or pre-emption shall not affect the validity of the remaining portions of this Ordinance or its application to other persons or circumstances.

Section 3. Effective Date. This Ordinance shall take effect five days after passage and publication in the official newspaper of the City. The "City of Sammamish Public Works Standards" adopted under SMC 14.01.010 on Attachment A shall take effect and be in full force January 1, 2017.

ADOPTED BY THE CITY COUNCIL AT A REGULAR MEETING THEREOF ON THE _____ DAY OF DECEMBER, 2016.

CITY OF SAMMAMISH

_____
Mayor Donald J. Gerend

ATTEST/AUTHENTICATED:

_____
Melonie Anderson, City Clerk

Approved as to form:

_____
Michael R. Kenyon, City Attorney

Filed with the City Clerk:	October 13, 2016
Public Hearing:	October 18, 2016
First Reading:	October 18, 2016
Public Hearing:	November 1, 2016
Second Reading:	November 1, 2016
Public Hearing:	December 6, 2016
Passed by the City Council:	
Date of Publication:	
Effective Date:	January 1, 2017

Exhibit 1

Chapter 14.01
PUBLIC WORKS STANDARDS ADOPTED

Sections:

14.01.010 Public works standards adopted.

14.01.020 Resolution of conflicts.

14.01.030 Appeals.

14.01.010 Public Works Standards Adopted

(1) The City hereby adopts by reference the design standards and specifications set forth in the document entitled "City of Sammamish 2016 ~~Interim~~ Public Works Standards" ~~dated April 19, 2000~~ as now or hereafter amended as the Public Works Standards for the City, which includes but is not limited to transportation standards and street standards. Pursuant to RCW 35A.13.180, a copy of the City of Sammamish Public Works Standards is available from the office of the City Clerk.

(2) The ~~director of~~ Public Works Director is hereby authorized to administratively interpret and apply the standards in a manner consistent with their terms in order to better implement the standards or allow for changes in street design and construction technology and methods.

14.01.020 Resolution of Conflicts

In case of inconsistency or conflict between other provisions of the Sammamish Municipal Code and the City of Sammamish P~~p~~ublic W~~w~~orks S~~s~~tandards adopted in this chapter, the most restrictive provision shall apply.

14.01.030 Appeals

Any person or agency aggrieved by an act or decision of the City pursuant to the P~~p~~ublic W~~w~~orks S~~s~~tandards may appeal said act or decision to the City of Sammamish pursuant to the appeal provisions for the underlying development permit application as contained in Chapter 20.05 SMC.

Exhibit 1

Exhibit 3

2016

PUBLIC WORKS STANDARDS

~~October 27~~Novermber 9, 2016

Public Works Department

City of Sammamish

801 228th Ave SE

Sammamish, WA 98075

Exhibit 3

Page intentionally left blank.

CONTENTS

FOREWORD ..... viii~~vii~~

DIVISION 1 – ADMINISTRATION 1

Chapter 1. Introduction 3

1.1. General Authority 3
1.2. Vesting ..... 5~~4~~
1.3. Copy of the PWS ..... 5~~4~~
1.4. Contact Information ..... 5~~4~~

Chapter 2. Permits ..... 9~~7~~

2.1. Public Utilities ..... 9~~7~~
2.2. Other Agencies ..... 9~~7~~

Chapter 3. Permit Process ..... 13~~11~~

3.1. Permit Issuance ..... 13~~11~~
3.2. Pre-construction Meeting ..... 13~~11~~
3.3. Permit Inspections ..... 13~~11~~
3.4. Final Project Approval ..... 14~~12~~
3.5. Permit Timing and Expiration ..... 14~~12~~
3.6. Right-of-Way Use Notification ..... 15~~13~~
3.7. Franchises, Electric and Communication Facilities ..... 15~~13~~

Chapter 4. Permit Submittals ..... 17~~15~~

4.1. Design Professionals ..... 17~~15~~
4.2. Plans and Specifications ..... 18~~16~~
4.3. Survey ..... 19~~17~~
4.4. Surface Water Report ..... 19~~17~~
4.5. Geotechnical Report ..... 20~~18~~
4.6. Traffic Impact Analysis (TIA) ..... 21~~18~~
4.7. Traffic Control Plan ..... 21~~19~~
4.8. Declaration of Covenant ..... 21~~19~~
4.9. Easements ..... 21~~19~~
4.10. Tracts ..... 22~~20~~

4.11. Dedication ..... 22~~20~~
4.12. Dewatering Plan ..... 23~~21~~
4.13. Maintenance Plan ..... 23~~21~~
4.14. Financial Guarantee ..... 23~~21~~
4.15. Insurance ..... 24~~21~~

Chapter 5. Permit Fees ..... 25~~23~~

DIVISION 2 – RIGHT-OF-WAY ..... 27~~25~~

Chapter 6. Standards ..... 29~~27~~

6.1. Companion Documents ..... 29~~27~~
6.2. Deviation from Engineering Standards ..... 31~~29~~

Chapter 7. General Requirements ..... 33~~31~~

7.1. Americans with Disabilities Act ..... 33~~31~~
7.2. Low Impact Development ..... 33~~31~~
7.3. Maintenance ..... 33~~31~~
7.4. Tree Removal/Pruning ..... 33~~31~~
7.5. Connectivity ..... 34~~32~~
7.6. Connectivity to Substandard Roadways ..... 34~~32~~
7.7. Underground Utilities ..... 35~~33~~
7.8. Frontage Improvements ..... 36~~34~~
7.9. Dedication of Right-of-Way ..... 38~~36~~
7.10. Illumination ..... 38~~36~~
7.11. Curbing ..... 40~~38~~
7.12. Traffic Calming Devices ..... 40~~38~~
7.13. Pavement Cut Moratorium ..... 41~~39~~

Chapter 8. Traffic Impact Analysis ..... 43~~41~~
Chapter 9. Street Classification ..... 45~~43~~

9.1. Arterial Streets ..... 45~~43~~
9.2. Non-Arterial Streets ..... 47~~45~~
9.3. Alley ..... 49~~47~~
9.4. Woonerf ..... 50~~48~~
9.5. Private Street ..... 50~~48~~

Chapter 10. Access Management ..... 52~~50~~

10.1. General ..... 52~~50~~

10.2. Access Requirements 5452

Chapter 11. Access Design 5654

11.1. General 5654
11.2. Access Width 5654
11.3. Access Clearance 5755
11.4. Access Approach 5755
11.5. Driveway 5856
11.6. Parking Lot Throat Lengths 6058

Chapter 12. Street Design 6260

12.1. Reconstruction 6260
12.2. Widths 6260
12.3. Vertical Alignment 6260
12.4. Vertical Curve Criteria 6461
12.5. Horizontal Curve Criteria 6461
12.6. Street End 6663
12.7. Utility Locations 6764
12.8. Private Streets and Alleys 7067
12.9. Dead End Street 7168

Chapter 13. Intersection Design 7470

13.1. General 7470
13.2. Alignment 7470
13.3. Spacing 7470
13.4. Design Vehicles 7571
13.5. Curb Radii 7571
13.6. Drainage 7672
13.7. Intersection Grades 7672
13.8. Pedestrian Treatments 7773
13.9. Clear Sight Triangle 8075
13.10. Pedestrian Sight Distance 8378
13.11. Roundabout Intersection 8378
13.12. Signalized Intersections 8378

Chapter 14. Non-Motorized Facilities 8580

14.1. General 8580

14.2. Sidewalks ..... 85~~80~~
14.3. Bicycle Facilities ..... 86~~81~~
14.4. Regional Trails ..... 86~~81~~
14.5. Connector Trail ..... 87~~82~~
14.6. Local Trail ..... 87~~82~~
14.7. Nature Trail ..... 89~~83~~
14.8. Waterway Trail ..... 89~~83~~
14.9. Amenities ..... 91~~84~~

Chapter 15. Roadside Features ..... 93~~86~~

15.1. Fixed Objects ..... 93~~86~~
15.2. Landscaping ..... 94~~87~~
15.3. Mailboxes ..... 96~~89~~
15.4. Steps, Stairways ..... 98~~90~~
15.5. Pedestrian Railing ..... 98~~90~~
15.6. Cut-and-Fill Slopes ..... 99~~91~~
15.7. Guardrail ..... 99~~91~~
15.8. Bus Stops ..... 99~~91~~

Chapter 16. Surface Treatment ..... 102~~94~~

16.1. General ..... 102~~94~~
16.2. Asphalt Pavement Design ..... 102~~94~~
16.3. Pavement Widening ..... 103~~95~~

Chapter 17. Traffic Control Devices ..... 104~~96~~

DIVISION 3 – SURFACE WATER ..... 106~~98~~

Chapter 18. Surface Water Standards ..... 108~~100~~

DIVISION 4 – CONSTRUCTION AND INSPECTION ..... 110~~102~~

Chapter 19. Construction ..... 112~~104~~

19.1. Standards ..... 112~~104~~
19.2. General ..... 112~~104~~
19.3. Temporary Traffic Control ..... 115~~107~~
19.4. Staking ..... 116~~108~~
19.5. Trenches ..... 117~~109~~
19.6. Traffic Signal Loops ..... 118~~110~~
19.7. Sidewalks ..... 118~~110~~

19.8. Landscaping ..... 120~~112~~
19.9. Grading ..... 121~~113~~
19.10. Curb, Gutter, Access Approach ..... 121~~113~~
19.11. Pavement Restoration ..... 122~~114~~

Chapter 20. Inspection ..... 127~~118~~

20.1. Authority and Duties of Inspectors ..... 127~~118~~
20.2. Requirements ..... 128~~119~~

TABLES

Table 1.1 Contact Information 65
Table 7.1 Lighting Costs ..... 38~~36~~
Table 9.1 Street Classification Characteristics ..... 46~~44~~
Table 9.2 Non-Arterial Streets ..... 48~~46~~
Table 11.1 Access Widths ..... 57~~55~~
Table 12.1 Maximum Profile Grade ..... 62~~60~~
Table 12.2 Vertical Curve – Minimum Stopping Sight Distance (in feet) ..... 64~~61~~
Table 12.3 Horizontal Curve Design (in feet) ..... 65~~62~~
Table 12.4 Underground Utility Locations ..... 68~~65~~
Table 12.5 Private Street Dimensions ..... 70~~67~~
Table 13.1 Curb Radii Design Values ..... 76~~72~~
Table 15.1 Standard Horizontal Clearances ..... 93~~86~~
Table 15.2 Standard Vertical Clearances ..... 93~~86~~
Table 19.1 Pavement Cut Dimensions ..... 124~~115~~

FIGURES

Figure 7.1 Transition Length to Substandard Roadway 35
Figure 15.3 Railing Scenarios 99
Figure 19.1 Tree Protection – Right-of-way 114
Figure 19.2 Tree Installation – Right-of-way 121

~~Figure 7.1 Transition Length to Substandard Roadway ..... 33~~
~~Figure 13.1 Clear Sight Triangle – Residential Driveway ..... 76~~
~~Figure 13.2 Clear Sight Triangle – Uncontrolled Crossing Intersection ..... 77~~
~~Figure 13.3 Clear Sight Triangle – Yield and T Intersections ..... 78~~
~~Figure 15.3 Railing Scenarios ..... 91~~
~~Figure 19.1 Tree Protection – Right of way ..... 106~~

~~Figure 19.2 Tree Installation – Right-of-way ..... 112~~

APPENDICES

APPENDIX A - ACRONYMS AND DEFINITIONS
APPENDIX B - SURVEY CRITERIA
APPENDIX C - SURFACE WATER REPORT GUIDELINES
APPENDIX D - GEOTECHNICAL REPORT GUIDELINES
APPENDIX E - TRAFFIC IMPACT ANALYSIS REPORT GUIDELINES
APPENDIX F - RIGHT-OF-WAY STREET TREE LIST
APPENDIX G - RECORD DRAWING CRITERIA
APPENDIX H - ENGINEERING DEVIATION CRITERIA
APPENDIX I - RIGHT OF WAY VACATION

FOREWORD

The Public Works Standards contained in this document provide information to the development community to help with the processes, administration, engineering, and inspection that apply to private development within Sammamish. Land Use codes related to development can be found in Titles 21A and 21B of the Sammamish Municipal Code (SMC).

This manual has four divisions:

Division 1: Administration

Contains information related to permits.

Division 2: Right-of-Way

Presents standards and other information related to development within the right-of-way.

Division 3: Surface Water

Contains surface, storm water, as well as design standards.

Division 4: Construction and Inspection

Provides the basics regarding construction and inspection in the City right-of-way.

The appendices contain information that supplements the four referenced divisions.

Page intentionally left blank.

Exhibit 3

DIVISION 1 – ADMINISTRATION

Page intentionally left blank.

Chapter 1. Introduction

1.1. General Authority

Sammamish Municipal Code Chapter 14.01 authorizes the creation of Public Works Standards (PWS).

This manual addresses permitting and engineering requirements for site and right-of-way work related to development within the City of Sammamish. While this manual is directed toward the developer and the design/development engineer, it is intended to provide information to a wide group of users, including the development of Capital Projects by the City.

The manual sets forth minimum engineering criteria and specifications, and supplements the Sammamish Municipal Code. It does not replace the Code. These standards do not substitute for engineering design, nor are these standards intended to limit innovative design where equal performance in value, safety, and maintenance can be demonstrated. These Standards cannot provide for all situations. They are intended to assist but not to substitute for competent work by design professionals. It is expected that land surveyors, engineers, and architects will bring to each project the best of skills from their respective disciplines. These Standards are also not intended to limit unreasonably any innovative or creative effort that could result in better quality, better cost savings, or both. Any proposed departure from the Standards will be judged, however, on the likelihood that such deviation will produce a compensating or comparable result, in every way adequate for the City and its residents.

The Public Works Director may substitute more stringent design standards and specifications where special conditions warrant pursuant to SMC 21A. The Public Works Director may also authorize deviations pursuant to SMC 14. From time to time, changes may be needed to add, delete, or modify the provisions of these Standards. These Standards may be changed and, upon approval of the City Engineer, shall become effective and shall be incorporated into the existing provisions.

The City's website provides access to the PWS, the Sammamish Municipal Code (SMC), informational handouts, permit applications, and other guidance documents. The Development Code is contained in SMC 21A and 21B.

City of Sammamish website: http://www.sammamish.us/

Public Works Standards: http://www.sammamish.us/xxxxxxxxxx

Sammamish Municipal Code: http://www.codepublishing.com/wa/sammamish/

Development Handouts and Permit Applications: http://www.sammamish.us/permits/Default.aspx

1.2. Vesting

A. A project is vested when the permit application is determined to be complete by the City. The vesting date is determined by state law. Refer to Submittal Checklists for guidance on complete applications.

1. The City periodically reviews and revises the PWS. In the case that a code or standard has been revised more recently than the update cycle for this manual, the most current code or standard supersedes the information provided in this manual.
2. A permit that has been canceled is no longer vested. If the Applicant wishes to continue with the project, a new application must be submitted and the project will be subject to the regulations in place at the time the new complete application is received by the City.
3. The edition of this manual that applies to a particular project is the edition in effect when the proposed project is vested. If a newer version of the PWS is published after a project is vested, either the newer version of the PWS in its entirety or the older version in its entirety may be used.

1.3. Copy of the PWS

The Public Works Standards are available online at http://www.sammamish.us/xxxxxx

The PWS is also available digitally. Please contact the Public Works Department for a copy.

1.4. Contact Information

The contact information in Table 1.1 is provided for assistance during project planning and development and is not a comprehensive list of contacts. Also, refer to the directory available through the City of Sammamish website: http://www.sammamish.us/about/ContactUs.aspx.

Table 1.1 Contact Information

Community Development 801 228th Ave SE Sammamish, WA 98075 http://www.sammamish.us/departments/communitydevelopment/Default.aspx (425) 295-0500	Public Works Department 801 228th Ave SE Sammamish, WA 98075 http://www.sammamish.us/departments/publicworks/Default.aspx (425) 295-0500
Eastside Fire & Rescue 175 Newport Way NW Issaquah, WA 98027 http://eastsidefire-rescue.org/ (425) 313-3200	Sammamish Police Department 801 228th Ave SE Sammamish, WA 98075 http://www.sammamish.us/departments/lawenforcement/Default.aspx (425) 295-0770
Sammamish Plateau Water & Sewer District 1510 228th Ave SE Sammamish, WA 98075 http://spwsd.org/ (425) 392-6256	Northeast Sammamish Sewer & Water District 3600 Sahalee Way NE Sammamish, WA 98074 http://www.nesswd.org/ (425) 868-1144
Electrical Permits and Boilers in Excess of 200k Btu/hr.: State of Washington Department of Labor and Industries http://www.lni.wa.gov/TradesLicensing/Electrical/default.asp (425) 996-1496	Waste Management of Washington, Inc. PO Box 541008, PO Box 541065 Los Angeles, CA 90054 http://www.wmnorthwest.com/sammamish/index.html (800) 592-9995
Electric Purveyor: Puget Sound Energy 10885 NE 4th Street, P.O. Box 97034 Bellevue, WA 98009-9734 http://www.pse.com/Pages/default.aspx. (888) 225-5773	Natural Gas Purveyor: Puget Sound Energy 10885 NE 4th Street, P.O. Box 97034 Bellevue, WA 98009-9734 http://www.pse.com/Pages/default.aspx (888) 225-5773

Exhibit 3

Septic and Wells: Seattle/King County Public Health 14350 SE Eastgate Way Bellevue, WA 98007 http://directory.kingcounty.gov/ServiceDetail.asp?ServiceID=6768 (206) 296-4932	Republic Services of Bellevue 1600 127th Avenue NE Bellevue, WA 98005 http://site.republicservices.com/site/bellevue/en/pages/home.aspx (425) 452-4762

Page intentionally left blank.

Chapter 2. Permits

The information in this chapter summarizes the requirements in the City of Sammamish Municipal Code (SMC). If there are any conflicts, the SMC shall prevail. Prior to beginning a residential, commercial, or industrial development, or a project requiring construction of public infrastructure within the City, the proponent must prepare and submit a complete application, including permit application, plans, and specifications to the Department of Community Development (DCD) for review and approval.

2.1. Public Utilities

Public utilities owned by the city, are exempt from right-of-way permits.

2.2. Other Agencies

A. Utility and similar districts within the City are separate entities that are not owned or operated by the City (water and sewer district, fire district, and other utility providers). It is the Applicant's responsibility to obtain permits from other agencies. Prior to issuing City of Sammamish permit(s), verification that the Applicant has obtained other required permits may be required.

B. Sammamish Plateau Water, Northeast Sammamish Sewer and Water District, Eastside Fire and Rescue, and Puget Sound Energy are examples of entities that are separate from the City of Sammamish. In order to ensure coordination between these utilities, the proposed locations of water, sewer, gas, telephone, cable television, and power in the right-of-way must be approved by each provider as part of the permit review process.

C. The permit plans must show the right-of-way installation locations as approved by each provider. Each utility only needs to approve the proposed locations. Approval shall consist of signature/initials with phone number and date from a representative of each provider on a civil plan showing the proposed utility location.

D. Permits from other agencies (see Chapter 1 for contact information) may include, but are not limited to:

1. Electrical Permits: City of Sammamish.

2. Electrical Service Permit: Puget Sound Energy.
3. Propane Tanks: Eastside Fire and Rescue.
4. Sewer connection services and related information: Sammamish Plateau Water and Sewer District or Northeast Sammamish Sewer and Water District.
5. Water connection services and related information: Sammamish Plateau Water and Sewer District or Northeast Sammamish Sewer and Water District.
6. Natural gas connection services and related information: PSE
7. Washington Department of Fish and Wildlife
    - i. Any work below the Ordinary High Water Mark (OHWM) of waters of the state including intermittent streams (work that uses, diverts, obstructs or changes natural flow or bed of State waters);
    - ii. Any work that uses, diverts, obstructs, or changes the natural flow or bed of any of the salt or fresh waters of the state requires a Hydraulic Project Approval (HPA) permit. Download the application for an individual permit, called a Joint Aquatic Resource Permit Application (JARPA), from the Department of Fish and Wildlife website.
8. Department of Ecology
    - i. An NPDES (National Pollutant Discharge Elimination System) Construction Permit Notice of Intent is required from the Washington State Department of Ecology for all soil disturbing activities (including clearing, grading, and/or excavation) where one or more acres will be disturbed, and stormwater will be directly discharged to a receiving water (e.g., wetlands, creeks, unnamed creeks, rivers, marine waters, ditches, estuaries) or to storm drains that discharge to a receiving water. If all stormwater is retained on-site and cannot enter surface waters of the state under any condition, the project may not trigger a permit.
    - ii. Water Quality Certification (401) ensures that limits placed in a permit on the quantity and concentration of pollutants discharged are not exceeded.

9. U.S Army Corps of Engineers

    i. Activities that may affect endangered species shall be reviewed for permits under Section 404 of the Clean Water Act and Section 10 of the Rivers and Harbors Act. The Army Corps of Engineers coordinates with the NOAA Fisheries and U.S. Department of Fish and Wildlife to ensure Endangered Species Act consistency.

10. Others

    i. Federal Emergency Management Agency (FEMA) administers programs related to flood protection.

Page intentionally left blank.

Chapter 3. Permit Process

This chapter describes how the Applicant and the City work together during the permit process. Each permit application submitted to the Department of Community Development (DCD) is assigned a project manager. The project manager or permit center can provide process information related to a specific permit. Contact DCD for more information.

3.1. Permit Issuance

Before a permit is issued, all requirements as stated by the Sammamish Municipal Code (SMC) and DCD for issuance must be met. These may include proof of required local, state, and federal permit approvals, liability insurance, financial guarantees, recorded covenants, easements, or dedications, and/or payment of any outstanding fees. When all conditions for issuance are met, and the permit is ready to issue, a representative from DCD will notify the Applicant that the permit is ready, and what fees are must be paid prior to issuance of the permit.

3.2. Pre-construction Meeting

Projects may require a pre-construction meeting. Depending on the project scope, more than one meeting may be required. Construction may begin only **after** the required pre-construction meeting(s) have been held. The Permittee is responsible for scheduling the pre-construction meeting(s) with the City. Directions for scheduling a pre-construction meeting(s) are found on the issued permit(s).

3.3. Permit Inspections

A. Refer to Chapter 20, Inspection, of the PWS for more information on inspections.

B. Inspections are performed by representatives of the City and shall be coordinated by the Permittee with the assigned inspector.

C. Inspections are usually performed Monday through Friday, from 8:00 a.m. to 4:00 p.m. Any requested inspections beyond the weekday work hours of the City must be requested at a minimum of 48 hours in advance.

D. Some projects may require special inspections performed by pre-approved third parties. Costs are the responsibility of the applicant.

3.4. Final Project Approval

Contact the project manager or DCD for specific information related to final project approval.

A. **Fees.** If, during construction, the number of estimated inspections is exceeded, or if revisions to approved plans have been submitted for review, additional fees may apply. All inspection, plan revision review, and other fees due to the City must be paid prior to final project approval.

B. **Permanent Stabilization.** All disturbed areas must have permanent stabilization in place and functioning before final project approval.

C. **Financial Guarantee.** Refer to the DCD for more information on Financial Guarantees.

D. **Declaration of Covenant.** Prior to the final project approval, executed covenants that have been recorded at the time of permitting must be verified to be in conformance with the constructed items.

E. **Record Drawings.** Record drawings (as-builts) must be provided for all public and private stormwater facilities, site grading, for right-of-way work, and for landscaping, recreation, required environmentally critical area mitigation or restoration. Refer to Appendix G, Record Drawing Criteria, of the PWS for more information.

F. **Inspections.** All inspections must be completed. Upon completion of all site or right-of-way work and associated conditions approved under a permit, the Permittee shall request a final inspection.

G. **Work Completion.** The permit process is complete upon final inspection approval by the City.

H. **Maintenance/ Defect Bonds**. Refer to SMC 27A for information on required maintenance and defect bonds.

3.5. Permit Timing and Expiration

Contact the project manager or DCD for specific information.

3.6. Right-of-Way Use Notification

A. When required, at the time of application for a right-of-way permit, the Applicant shall notify all public and private utility entities known to be using or proposing to use the same right-of-way of the proposed timing of such construction. Within seven days of receiving this notification, any such entity notified may request a delay of the proposed construction to coordinate other right-of-way construction with the Applicant.

B. **Notification is required** for any project that has the potential to disturb encroachments into the right-of-way. The permit applicant will notify and work with the abutting property owner(s) when there are encroachments that adversely affect installation of right-of-way improvements. For City Projects Public Works will be responsible for notification of the abutting property owners.

C. For closures and extended impacts to the public within the right-of-way, the applicant will be responsible for any additional notifications and advance warnings to the public as conditioned in the appropriate permit.

3.7. Franchises, Electric and Communication Facilities

In addition to a specific franchise agreement and the standards contained herein, requirements for the construction in and use of the right-of-way by utility providers can be found in SMC 14.

Page intentionally left blank.

Chapter 4. Permit Submittals

Depending on particular project elements, the City may request submittals in addition to those described herein. To be considered for continued processing and review, all applications must be deemed complete by the project manager. Not all projects are required to submit all of the information listed below. Additional information is available on permits and development on the City's website: http://www.sammamish.us/departments/communitydevelopment/DCDPermitCenter.aspx.

4.1. Design Professionals

The following is a summary of the requirements for design professionals:

A. Engineering:

1. State law requires that certain work, including engineering and land surveying, be performed by or under the direction of a professional licensed to practice in Washington State.

B. Right-of-Way:

1. Nearly all right-of-way design, except simple activities, such as installation of a driveway apron, require design by a Washington State licensed civil engineer.

C. Stormwater:

1. Design of treatment facilities, flow control facilities (detention ponds or infiltration basins), structural source control Best Management Practices (BMPs), or drainage conveyance systems shall be prepared by or under the direction of a licensed civil engineer. Construction Stormwater Pollution Prevention Plans (SWPPPs) that involve engineering calculations must also be prepared by or under the direction of a licensed civil engineer.

D. Surveying:

1. Activities requiring a licensed surveyor pursuant to RCW 18.43 include:

   i. Determining and establishing legal boundary lines and survey reference points.

ii. Construction of treatment or flow control facilities (detention ponds or infiltration basins), structural source control BMPs, or drainage conveyance systems to set locations and elevations.

iii. Cuts on slopes steeper than 15 percent require a professional surveyor to set the slope stakes to confirm top and toe of cuts.

iv. Setting of survey marks such as property corners, right-of-way lines, subgrade elevations, and slope stakes.

v. Placement, protection, and replacement of survey monuments. When no profile has been established for the streets abutting and leading to a development site, the City may require a survey of the street area by a licensed surveyor for the purpose of establishing the proposed centerline profile and the transition between the right-of-way and on-site.

vi. Flood Zone Elevation Certificates require surveyed finished floor elevations to confirm that structures meet the elevations set by the City.

vii. Information must be provided for private infrastructure that connects to the City's infrastructure, public facilities, and right-of-way work, that verifies that all improvements lie within the right-of-way and public easements.

E. Landscaping:

1. For site landscaping and environmental critical area design, a licensed landscape architect is required. Refer to SMC Title 21A for additional requirements.

4.2. Plans and Specifications

The plans must clearly indicate the location, nature, and extent of the proposed work and must provide sufficient detail to show that all provisions of the standards and codes are met. Specifications must accompany the plans whenever the plans and general notes do not adequately describe the proposed work and materials.

4.3. Survey

A. Survey Reference.

1. Horizontal Datum: All survey work, including but not limited to mapping, platting, planning, design, right-of-way surveys, and construction surveys, shall be in the Washington State Plane Coordinate System, North Zone, using NAD 83(1991) datum.
2. The plans shall show the horizontal control used to establish ties to the datum, with type, size and location, date visited, and the State Plane coordinates for each monument used. The project shall reference at least two King County survey horizontal control monuments. The basis of bearing shall be shown.
3. Vertical Datum: All survey work, including but not limited to mapping, platting, planning, design, right-of-way surveys, and construction surveys, shall be in the North America Vertical Datum of 1998 (NAVD 1988). Vertical datum shall also include the reference/ conversion to NGVD 29.
4. The plans shall show the benchmarks used to establish ties to the datum, with reference number, description, location and elevation of each benchmark used, and any project site benchmarks. The project shall be tied to at least two King County survey control benchmarks.
5. Flood Elevation certificates shall provide a conversion from 1988 NAVD to 1929 NAVD.

B. All real properties, including parcels, rights-of-way, and easements must be located and staked on the ground, starting from a monument.

C. Legal descriptions of the horizontal and vertical locations require the location of a monument as their beginning point of reference.

D. Refer to Appendix B – Survey Criteria.

4.4. Surface Water Report

The City of Sammamish has adopted the King County Surface Water Design Manual (KCSWDM) in order to comply with its NPDES II Municipal Stormwater Permit. The current version will be as

adopted by Ordinance. In addition, the City has developed an addendum to this manual, “City of Sammamish Surface Water Design Manual Addendum Attachment "B". Which is found at this website.

http://www.sammamish.us/departments/publicworks/StormWaterManagement.aspx?page=developers

The City encourages the use of emerging technologies. Examples of emerging technologies include media filters, catch basin inserts, engineered erosion control products, and low impact development techniques. Proposed emerging technologies must be listed on either the Washington State Department of Ecology’s Technology Assessment Protocol (TAPE) or Chemical Technology Assessment Protocol (CTAPE). The Public Works Director must approve the emerging technology for use.

4.5. Geotechnical Report

A. A geotechnical report helps determine if the proposal for a site is appropriate. In addition to geotechnical reports required to support building designs, a geotechnical report is required for: 1) work on sites containing or adjacent to slopes that are 15 percent or steeper and 2) for some storm drainage design. Refer to SMC Chapter 21A.50 and 21A.15 for critical area information.

B. Refer to Appendix D – Geotechnical Report Guidelines of the PWS for the approved report format.

C. For site development on a site with no steep slopes, erosion hazards, or critical areas, a report previously prepared for that site may be accepted if:

1. The report is less than five years old and no significant changes have occurred.
2. The geotechnical engineer/engineering geologist who signed the report provides a letter stating the report is still applicable to the site and to the currently proposed project.

4.6. Traffic Impact Analysis (TIA)

Refer to Chapter 8, Traffic Impact Analysis, and Appendix E, Traffic Impact Analysis Report Guidelines, of the PWS for guidance in preparing a required TIA.

4.7. Traffic Control Plan

Prior to beginning any activity which might affect City right-of-way, the Applicant shall provide the City, for review and approval as part of any permit, a traffic control plan that meets either Manual of Uniform Traffic Control Devices (MUTCD) standards or WSDOT Standard Plans.

The traffic control plan must accurately reflect existing right-of-way conditions including accesses, channelization, sidewalks, bike/pedestrian paths, bus stops, hydrants, trees, poles, pavement edge, etc. The traffic control plan must allow for continued emergency services access through the work zone. The plan shall contain adequate connections and clear signage for pedestrian and business disruption within and through the work zone.

4.8. Declaration of Covenant

The City requires a Declaration of Covenant for all permanent surface water BMPs on all projects, both private and public. The City will supply the Covenant paperwork for completion with the exception of any exhibits, which shall be prepared by the Applicant and approved by the City. The Applicant will do final signature and recording with the King County Recorder's Office. After recording, the Applicant shall return a copy to the City.

4.9. Easements

Easements must be provided when facilities on private property will be used by more than one lot or will benefit the public.

A. **Utilities.** Each utility (water, sewer, power, drainage, etc.) determines the minimum width for an easement. See Chapter 18, Surface Water Standards, of the PWS for more information on drainage easements.

B. **Non-motorized.** Non-motorized easements facilitate public trail circulation between neighborhoods, schools, shopping centers, and other activity centers. A non-motorized easement shall be wide enough to include the trail plus at least two feet on each side.

C. **Temporary Construction Access.** Access easements are required when more than one lot shares a portion of land to provide access when construction activities cross onto neighboring properties or parcels, a temporary construction easement is needed. A temporary construction easement shall be wide enough to include all areas of construction activities.

4.10. Tracts

Tracts shall be used for facilities that serve a broader group of individuals, have some degree of access by the public, and typically require regular maintenance activities. Examples of facilities that may be located in tracts include private streets or drainage facilities serving more than one lot, recreational facilities, open spaces, etc. Tracts are not subject to minimum lot size standards for the zone, although they must be large enough to accommodate the facilities and activities located within them, including any setbacks. For additional information on types of tracts that may be created through the land division process, refer to SMC Title 19A.

A publicly maintained stormwater facility shall be located in the roadway right-of-way or in a tract dedicated to the City. At a minimum, the tract shall include the entire facility, site access area, and at least 10 feet of landscaping around the visible portion of the stormwater facility.

4.11. Dedication

A. Dedication shall occur at the time of recording for subdivision, or prior to permit issuance for construction projects.

B. The City may require right-of-way dedication to incorporate necessary transportation improvements. Refer to SMC Chapter 19A.08.100 for more information.

C. The Public Works Director may grant a deviation from the minimum right-of-way requirement where it is demonstrated that all conditions of the deviation process are met. Refer to Chapter 6, Section 6.2, Deviation from Engineering Standards, of the PWS.

D. Dedications may be required in the following situations:

1. Accommodation of motorized and non-motorized transportation, landscaping, utility, street lighting, traffic control devices, and buffer requirements;
2. The development project abuts an existing substandard public street and the additional right-of-way is necessary to incorporate future frontage improvements for public safety;
3. Right-of-way is needed for the extension of existing public street improvements necessary for public safety.
4. Right-of-way is needed in order to incorporate improvements that are reasonably necessary to mitigate the direct impacts of a development.

4.12. Dewatering Plan

Dewatering is defined as the removal and appropriate discharge and release of surface water and subsurface water. Temporary dewatering that occurs during construction must have a Temporary Dewatering Plan reviewed and approved by the City before dewatering begins.

4.13. Maintenance Plan

Improvements on private property, such as access, utilities, or surface water improvements, require the Permittee to prepare and submit an Operations and Maintenance Plan for City review before recording the plan with the King County Recorder's Office. The maintenance plan must spell out agreements regarding maintenance responsibility and costs.

4.14. Financial Guarantee

The City determines the performance, restoration, and maintenance financial guarantee amounts. The performance guarantee must be submitted before permit issuance. The maintenance guarantee must be provided before final approval. Refer to SMC Title 27A for more information. The maintenance/ defect period begins with the acceptance of the installation of the required improvements and approval of the as-built. Please contact the project manager or Department of Community Development (DCD) for more information.

4.15. Insurance

As a condition of the City permitting work within the public right-of-way, it is required that a certificate of liability insurance is provided indicating that the Permittee and/or contractor are covered by a Commercial General Liability insurance policy.

Additionally, when the City determines that the nature of any work on public or private property is such that it may create a hazard to human life, endanger adjoining property, street, street improvement or any other public property; the City may require the Permittee to provide a Certificate of Liability Insurance. In this case, the City shall determine the amount of insurance based on the nature of the risks involved.

The required liability insurance must be maintained for the duration of construction activities.

The City must be named as an additional insured under the Commercial General Liability insurance policy using ISO Additional Insured-State or Political Subdivisions-Permits CG 20 12 or a substitute that provides an equivalent endorsement.

Chapter 5. Permit Fees

The Department of Community Development (DCD) establishes and collects fees as set forth in the fee schedule adopted by the City Council.

Plan review and submittal fees are collected when the application is submitted. Additional fees, due and payable when the permit is issued, include but are not limited to independent review costs, additional inspection or review time, and transportation impact fees.

Page intentionally left blank.

DIVISION 2 – RIGHT-OF-WAY

Division 2 – Right-of-Way sets forth minimum engineering design criteria to support public safety and welfare within the right-of-way. Every effort has been made to ensure that these standards are in line with AASHTO, FHWA, ITE, and WSDOT standards.

The Public Works Director shall have the authority to administer the provisions of these technical standards, to determine applicability, to interpret unclear provisions, to determine the level of detail and methodologies for required analysis, and to promulgate procedures and rules for unique circumstances not anticipated within the standards and procedures contained within these Public Works Standards (PWS).

These standards do not substitute for engineering design, nor are these standards intended to limit innovative design where equal performance in value, safety, and maintenance can be demonstrated. More stringent design standards or specifications may be required where special conditions warrant.

All facilities in the right-of-way, unless specifically excluded, shall be designed by or under the direct supervision of a professional engineer licensed in Washington State. All right-of-way drawings, designs, sections, details, standard plans, and supporting data submitted to the City of Sammamish for approval, unless specifically excluded, must be stamped, signed, and dated by the engineer of record.

Page intentionally left blank.

Chapter 6. Standards

Design detail, construction workmanship, and materials shall be in accordance with these technical standards and the latest edition of the companion documents listed herein. Design and construction shall meet the applicable standards and codes, and the recommendations in specific reports, such as the geotechnical report, the traffic impact analysis, and the surface water report.

The following publications provide the basis for design and construction requirements for public and private development within the City:

A. City of Sammamish Comprehensive Plan

B. City of Sammamish ~~Stormwater Management Comprehensive Plan~~Storm and Surface Water Management Comprehensive Plan

C. City of Sammamish Municipal Code (SMC)

D. City of Sammamish Non-Motorized Plan

6.1. Companion Documents

When standards or other design criteria are not specifically addressed in the Public Works Standards (PWS), then the latest editions of the following shall govern the design.

A. **Transportation Design Standards:**

1. A Policy on Geometric Design of Highways and Streets, AASHTO

~~1.~~2. Guidelines for Geometric Design of Very Low-Volume Local Roads, AASHTO

~~2.~~3. Guidelines for Urban Arterial Program, WSDOT

~~3.~~4. *Urban Street Geometric Design Handbook*, Institute of Transportation Engineers (ITE)

~~4.~~5. Guide for Development of Bicycle Facilities, AASHTO

~~5.~~6. ADA Standards for Accessible Design

~~6.~~7. Design Manual, WSDOT

B. Public Right-of-Way Accessibility Guidelines (PROWAG), U.S. Access Board **Surface Water Design Standards:**

1. *The City of Sammamish has adopted the King County Surface Water Design Manual (KCSWDM) in order to comply with its NPDES II Municipal Stormwater Permit. The version will be as adopted by Ordinance. In addition, the City has developed an~~d~~ addendum to this manual, "City of Sammamish Surface Water Design Manual Addendum Attachment "B". Which is found at this website:*

   http://www.sammamish.us/departments/publicworks/StormWaterManagement.aspx?page=developers

C. Traffic Control Design Standards: *Manual on Uniform Traffic Control Devices*, Federal Highway Administration; available online at: http://mutcd.fhwa.dot.gov/

D. State Highway Guidelines: *Local Agency Guidelines*, WSDOT

E. Construction Specifications: *Standard Specifications for Road, Bridge, and Municipal Construction* M 41-10, WSDOT; WSDOT Manuals are available online at: http://www.wsdot.wa.gov/Publications/Manuals/

F. The following shall be applicable when pertinent, when specifically cited in these standards or when required by state or federal funding authority:

1. *Highway Capacity Manual*, Transportation Research Board
2. Standard Rock Wall Construction Guidelines, Associated Rockery Contractors
3. National Electrical Installation Standards (NEIS)
4. American Society for Testing and Materials (ASTM)
5. Design criteria of federal agencies including the Federal Housing Administration, Department of Housing and Urban Development, and the Federal Highway Administration, Department of Transportation.

6.2. Deviation from Engineering Standards

Deviation from the engineering standards contained in the PWS is a mechanism to allow the City to grant an adjustment in the application of the standards where there are unique circumstances relating to the proposal.

Deviations are submitted through a permit application and reviewed to determine that all requirements are met. All deviations must be approved by the Public Works Director in writing prior to the start of construction.

A. Requirements: The Director of Public Works shall grant a deviation from the Public Works Standards only if the applicant demonstrates all of the following;

1. The granting of such deviation will not be materially detrimental to the public welfare or injurious or create adverse impacts to the property or other property(s) and improvements in the vicinity in which the subject property is located.
2. The authorization of such deviation will not adversely affect the implementation of the Comprehensive Plan adopted in accordance with State Law.
3. The deviation shall not conflict with the standards of the critical areas regulations SMC 21A.50.
4. The deviation from the Public Works Standards shall only be granted if the proposal meets the following:
   - i. Conform to the intent and purpose of the Sammamish Municipal Code;
   - ii. Produce a compensating or comparable result which is in the public interest;
   - iii. Meets the objectives of safety, function and maintainability based upon sound engineering judgement.
5. A deviation from roadway design standards must meet the objectives for fire protection. Any deviation that does not meet the International Fire Code shall also require approval by the Fire Marshall.

The procedure for deviations from the Engineering Standards is included in Appendix H

Page intentionally left blank.

Chapter 7. General Requirements

This chapter provides general requirements related to transportation improvements.

7.1. Americans with Disabilities Act

All designs shall meet the current Americans with Disabilities Act (ADA) requirements and standards. In the event field conditions prohibit meeting ADA requirements, the design engineer must submit documentation that the design meets ADA to the maximum extent feasible.

7.2. Low Impact Development

The 2013 National Pollutant Discharge Elimination Phase II Permit applies to onsite improvements as well as improvements in the right-of-way. Stormwater requirements shall meet the Surface Water Design Manual for work constructed in the right-of-way; see Chapter 18 Surface Water Standards.

7.3. Maintenance

The City of Sammamish maintains and repairs all streets and sidewalks within the public right-of-way except for instances where maintenance is a condition of the Plat. The City is responsible for vegetation removal in the right-of-way during emergencies, in order to remove hazards and protect public safety.

In areas where the City is responsible for maintenance of landscaping, the City will utilize low maintenance vegetation and practices. It shall be the responsibility of the abutting landowners or HOAs to maintain decorative landscaping

7.4. Tree Removal/Pruning

Tree removal and pruning in the right-of-way is regulated by SMC 21A.37, Development Standards – Trees.

A. All tree removals and/or pruning within the right –of-way require a right-of-way permit.

7.5. Connectivity

In order to provide connectivity, street layouts shall continue streets, street layouts and pedestrian connections to existing adjoining development(s) or their anticipated locations where adjoining property is not yet developed.

A. Where existing adjoining properties have planned road and trail systems, connections shall be required.

B. Connection to existing roadway ends by new development shall be required when alignment between the roadways exist.

1. Aesthetic and environmental character between existing and new development shall be maintained.
2. Pedestrian facilities shall connect or have an approved transition where there is none in the existing development.
3. Traffic mitigation shall be reviewed as part of the traffic study for the new development when connecting to an existing adjacent neighborhood. Vehicle and pedestrian safety shall be included in the review.

C. When a connecting road serves 100 residential units or more, a secondary access point shall be required.

7.6. Connectivity to Substandard Roadways

The following applies when a proposed improved roadway designed to current standards connects to an existing roadway that does not meet the current standard.

A. Transition lengths for connections to roadways shall be determined by the multiplication of the posted speed limit times the required change of width through the taper, (Length=WxS), or continuation of the required width to the nearest intersection, whichever is shorter. In the event the nearest intersection is with a higher volume roadway, such as an arterial, the transition shall extend to the intersection. (See Figure 7.1.)

B. When the connection is to an unimproved right-of-way consisting of a gravel or dirt surface, the new development shall construct a minimum of a half-street improvement within the

nonstandard section to the nearest intersection or where a transition to an existing asphalt or concrete road surface shall be achieved. A minimum of a 20' width of roadway asphalt or concrete road surface shall be required.

C. If there is a gap of pedestrian facilities beyond a roadway transition to the nearest intersection or existing pedestrian facilities within a 1 block limit, the developer shall be required to install an approved pedestrian facility (i.e. sidewalk, pathway, or paved shoulder) to eliminate this gap. These locations must be shown on an adopted sidewalk and pathway plan, or along a roadway classification of neighborhood collector in conjunction with safe routes to school.

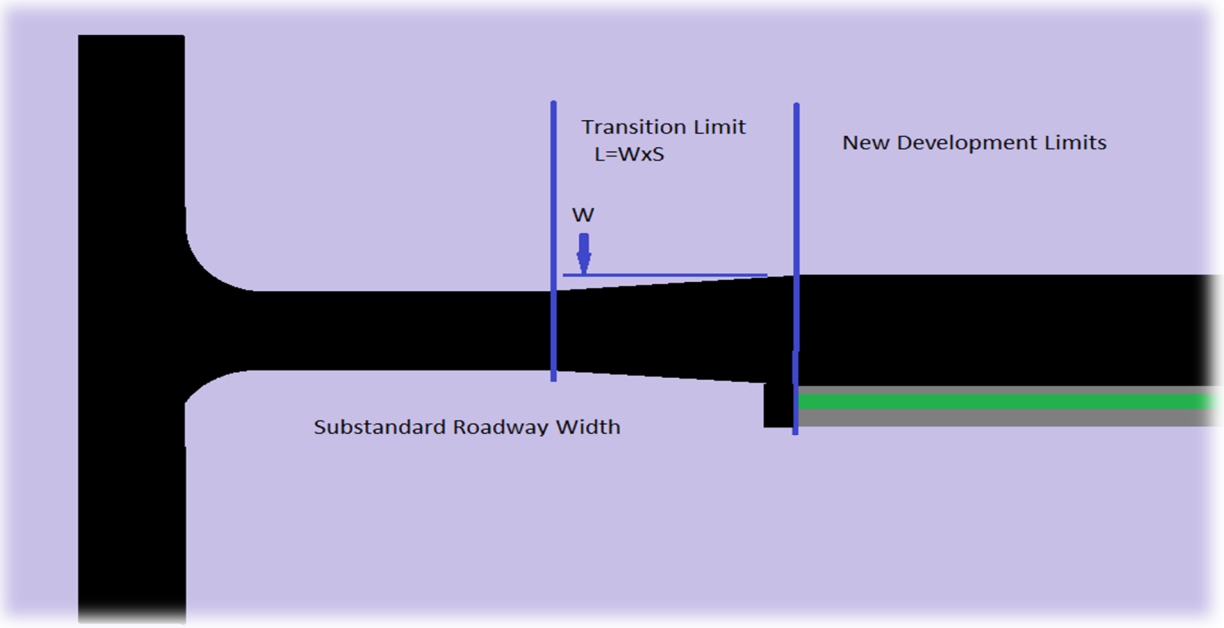

Figure 7.1 Transition Length to Substandard Roadway

7.7. Underground Utilities

A. The following applies to the connection from the distribution lines in the right-of-way to the property it serves (service connection):

B. If the existing service connection(s) in an area is/are underground, new service connections must be underground.

C. Existing overhead facilities, including utility poles will be allowed to remain above ground until one of the following events:

1. The City Council designates for undergrounding a capital improvement or public works project;
2. An entity instigates a joint trenching project that could reasonably serve to replace existing overhead facilities;
3. All services within the Town Center shall be placed underground.

7.8. Frontage Improvements

All new developments which obtain access from substandard public or private streets shall be required to construct all necessary street improvements to bring the portion of the roadway frontage to current City standards prior to approval. Such improvements shall run along the full frontage of the roadway the development is proposing access.

A. Standard frontage improvements consist of right-of-way dedication, curb, gutter, sidewalk, amenity zone and landscaping, drainage improvements, and pavement overlay up to one-half of each right-of-way abutting a property.

B. Additional offsite improvements beyond the development subject property shall be required, if determined through traffic mitigation outlined in an approved traffic study, or other standards such as safe routes to school. Improvements shall ensure safe movement of traffic, pedestrians, bicycles, transit, and non-motorized vehicles. The improvements can include widening, transit bus shelters, bus pullouts, utility undergrounding, street lighting, signage, and channelization.

C. When a development proposal triggers frontage improvements, existing frontage improvements shall be upgraded to current standards.

D. Design and installation of new or replaced frontage improvements may be adjusted during design or installation, with approval from the Public Works Director, to meet the existing conditions. Requests shall require a formal deviation.

E. The frontage improvements shall run the full length of the property line/right-of-way line. Transitions to existing conditions will occur outside the development frontage.

F. An amenity zone is required, except where an alternate street design deviation has been approved.

G. Required frontage improvements must be installed, inspected and approved by the City prior to final approval of the related building/site development permits and before a Certificate of Occupancy is issued or a permit receives final approval.

H. Exceptions

1. When the Director of Public Works deems that the above such improvements cannot be accomplished at the time of building construction, a recorded agreement on forms provided by the City shall be completed which provide for these improvements to be installed at a later date by the applicant or by the applicants singing of a waiver of protest to a local improvement district (LID) in favor of, and on a form acceptable to the City. Provided further that no street frontage improvements shall be required in conjunction with the building or remodeling of a single family home on single residential lot unless the lot is part of a subdivision of land which required street frontage improvements as a condition of final plat approval.

2. Requirements of this section shall not apply to the construction, remodeling or enlargement of any Group R, Division 3 (single family or duplex) or Group U occupancy (as defined in the International Building Code, IBC, to the construction of any accessory residential structure, to any sign, or to the structural addition, alteration or repair to any existing structure within any twelve month period which exceeds fifty percent of the value of the existing structure or increased the total floor space of the structure by more than ten percent.

7.9. Dedication of Right-of-Way

A. Dedication shall occur at the time of recording for subdivisions, or prior to permit issuance for construction projects.

B. The City may require right-of-way dedication to incorporate necessary transportation and frontage improvements if they are part of a current Capital Improvement project, and/or part of an overall master transportation plan.

7.10. Illumination

A. Puget Sound Energy (PSE) designs, installs, and maintains street lighting within the City of Sammamish right-of-way. When new street lighting is required, the Developer works with the Public Works Department and PSE regarding design and installation. The Developer pays the costs associated with the design and installation of the lighting system. These costs may include new electrical service or a new pole.

B. General Location: Luminaires shall be located near intersections, at street ends, at non-motorized crossings, and mid-block of streets over 300 feet in length. Luminaire locations shall be coordinated with the landscaping plans.

C. Lighting Fees – All costs associated with design and installation are the responsibility of the Developer. Maintenance fees are described in the Table 7.1 below.

Table 7.1 Lighting Costs

STREET CLASSIFICATION	OWNERSHIP	DESIGN FEES	MAINTENANCE FEES
Principal, Minor, or Collector Arterial Streets	City	Developer	City
Neighborhood Collector Street	PSE	Developer	HOA
Local Street	PSE	Developer	HOA

D. Street lighting system design requirements are as follows

1. City-owned arterial systems shall be based on WSDOT/APWA Standard Plans and Specifications.
2. All lighting shall conform to NEIS standards and be based on the latest IES Roadway Lighting Guidelines.
3. Street lighting system designs shall be stamped by a licensed engineer experienced with lighting design and shall include the following: luminaire spacing, illumination level, uniformity ratio, line losses, power source, the electrical and physical layout, installation details, plans, and specifications. All designs must be approved by the Public Works Director.
4. When lighting is installed as part of a Half Street improvement, these requirements for illumination levels and uniformity ratios only apply to the associated improvement.
5. Luminaires shall be LED with full-cut off lenses. Luminaires mounted on poles with powder coat finish shall match the color of the poles.
6. Poles on local streets shall be concrete.
7. Poles to be owned and maintained by the City shall be per the WSDOT standard plans for davit arm and pole and shall have a black powder coat finish.
8. As-built street lighting plans for City-owned systems shall be provided to the City on CD-ROM in CAD and Portable Document Format (PDF) and on 22-inch by 34-inch mylars prior to final occupancy or final plat approval.
9. Street lighting systems shall be designed to be accessible by a wheeled vehicle.
10. Luminaires in residential areas shall be located near intersections, at street ends, at non-motorized crossings, and midblock of streets over 300 feet in length. Maximum spacing of luminaires in residential areas shall be 150 feet.
11. Controller cabinets equipped with electrical meters, time clocks, circuit breakers, and other required components are required on arterial installations of five or more streetlights or as required by the Public Works Director.

12. The exact location of the power source shall be indicated on the design plans together with the remaining capacity of that circuit. System continuity and extension shall be provided.

E. Street lighting is encouraged but not required along private streets. Street lighting systems for private streets shall be designed and constructed on a separate power source from the public street lighting system. The property owner, homeowner, or homeowners' association shall pay all street light maintenance, installation, and power costs for private street light systems. A maintenance agreement is required.

7.11. Curbing

A. Vertical c~~C~~urb and gutter shall be installed on all street classifications.~~; however, vertical curb may be used for uniformity or replacement.~~

B. Rolled curb is not allowed for new construction. It may be used in limited areas to replace or match existing curbing, and in all cases must be approved by the Public Works Director.

C. Extruded curb is not allowed in public right-of-way, unless it is temporary and it is approved by the Public Works Director.

D. All curb removal shall be to the nearest joint. No saw cutting between joints is allowed.

7.12. Traffic Calming Devices

In locations where vehicle and pedestrian traffic is significantly increased within the non-arterial roadways, traffic calming techniques shall be assessed with all new developments. All new developments are to include analysis of impacts to adjacent neighborhoods when a connection is proposed. All proposed designs shall be reviewed and approved by the City Engineer.

A. Approved Traffic Control Devices that are currently allowed in the City include;

1. Traffic Circles;
2. Chicanes;
3. Choker Islands and Curb Extensions;
4. Raised Tables for Crosswalks (Speed Hump);

5. Roadway Narrowing;
6. Raised Intersections;
7. Medians.

B. For all existing developments that are not directly impacted by a new development application, traffic calming shall be evaluated as part of the City of Sammamish Neighborhood Traffic Management Program. (Ord. 2000-61)

7.13. Pavement Cut Moratorium

The following applies to a utility doing work (such as system repair or expansion) within the right-of-way.

A. Any street that has been constructed, reconstructed, resurfaced, overlaid or paved within the past five years cannot be cut for five years, unless the Director determines that:

1. Denying the permit would cause an undue hardship on the person applying for the permit; and
2. The need for the excavation could not have been reasonably anticipated before expiration of the moratorium.
3. Pavement shall be restored to the minimum requirements described in the standard details, the trench restoration map, and specific site requirements determined by the City Engineer.

B. Emergencies are exempt from the five-year moratorium. A right-of-way permit shall be applied for within one working day following the emergency.

Page intentionally left blank.

Chapter 8. Traffic Impact Analysis

Any development proposal that generates 10 or more new vehicle trips during the PM peak hour is required to submit a Traffic Impact Analysis (TIA). A TIA may also be required for unique projects that may not generate 10 AM and/or PM peak hour trips.

The amount of detail to be included in the TIA depends on the complexity of the proposed project. The scope of the TIA must be confirmed with the City Traffic Engineer prior to submittal. Refer to Appendix E for TIA guidelines.

Page intentionally left blank.

Chapter 9. Street Classification

Federal and State guidelines require that streets be classified based on function. The City divides streets into three categories, they are arterial, non-arterial, and private Arterial Streets.

9.1. Arterial Streets

Arterial streets provide a high degree of vehicular mobility through effective street design and by limiting property access to the right-of-way. Most vehicle trips on arterials are through-traffic. Arterials are divided into three classifications: Principal, Minor, and Collector Arterials. Minimum criteria for Arterial Streets are included in Table 9.1.

A. **Principal Arterials**: Principal arterials provide service for major traffic movement within the City. They are designed to be primary accesses through the City and carry large portions of daily traffic over extended distances in minimal time. Principal arterials connect freeways, highways and minor arterials. They have minimal driveway connections and local street connections.

(Examples: 228th Ave NE/SE, Sahalee Way and Issaquah Pine Lake Road, Issaquah Fall City Road)

B. **Minor Arterials**: Minor Arterials carry high volumes of traffic, but are typically designed with less regional mobility throughout the city than principal arterials. Their purpose is to connect primary arterials and various activity centers within the City, such as high schools and parks, with other principal arterials and collector arterials. Typically, they distribute to smaller geographical areas compared to principal arterials.

(Examples: E Lake Sammamish Pkwy, Inglewood Hill Road, 244th Ave SE-NE, NE 8th St., SE 8th St.)

C. **Collector Arterials:** Collector arterials are designed to connect multiple neighborhoods with non-arterial streets to the closest principal and minor arterial roadways. Collector arterials differ from minor arterial roadways because they may run adjacent to or extend into residential neighborhoods.

(Examples: 205th Pl NE, 248th Ave SE, and SE 24th St., Trossachs Blvd SE, 212th Ave SE)

Table 9.1 Street Classification Characteristics

	ARTERIAL STREETS		
	Principal	**Minor**	**Collector**
Function	- Connect cities and urban centers with minimum delay - Channel traffic to Interstate system - Accommodate long and through trips	- Connect activity centers within the City - Connect traffic to Principal Arterials and Interstate - Accommodate some long trips	- Access to community services and businesses - Connect non-arterial to Minor and Principal Arterial - Accommodate medium-length trips
Minimum Right of Way (1)(2)	94 feet	70 feet	70 feet
Travel Lane Width	11 feet	11 feet	11 feet
Auxiliary Lane Width	12 feet	12 feet	12 feet
Parking Lane/Width	None	Requires Public Works Director Approval/8 Feet	Requires Public Works Director Approval/8 Feet
Curb to Curb Width(3)	44 feet (3 Lane) 66 feet (5 Lane)	44 feet (3 lane)	44 feet (3 lane)
Sidewalk Width	Both Sides: 6 feet' wide (commercial areas may require up to 10 feet widths at discretion of the Public Works Director	Both Sides: 6 feet' wide (commercial areas may require up to 10 feet widths at discretion of the Public Works Director	Both Sides: 6 feet wide
Planter Strip Width(4)	Both sides 6 feet wide	Both sides 5 feet wide	Both sides 5 feet wide
Half Street Width(5)	28 feet	28 feet	28 feet
Design Speed (mph)	–35-45	30-35	25-35
Daily Volumes (ADT)	>15,000	7,000-20,000	1,500- 10,000

	ARTERIAL STREETS		
	Principal	Minor	Collector
Lane	Two or more	Two or more	Two or more
Striping	Travel lanes delineated	Travel lanes delineated	Travel lanes shall be delineated
Buses/Transit Stops	Allowed	Allowed	Allowed
Bicycle Facilities	Lanes, shared lanes, or signage	Lanes, shared lanes, or signage	Lanes, shared lanes, or signage
Pedestrian Facilities	- Sidewalks both sides - Amenity strips	- Sidewalks both sides - Amenity strips	- Sidewalks both sides - Amenity strips

(1)Does not include easements for public and private utilities.

(2)ROW may be increased to accommodate Auxiliary Lanes, Parking, or Rain Gardens

(3)Minimum Width - Land use Density or Offsite Parking Provisions may require more for-street Parking

(4)Does not include curb

(5)Minimum width includes Eleven-foot lanes and Four-foot shoulders.

9.2. Non-Arterial Streets

Streets that are not designated as arterials, are non-arterial streets. Sammamish divides non-arterial streets into Neighborhood Collector Streets and Local Streets. Criteria for non-arterial streets are included in Table 9.2 below.

A. Neighborhood Collectors:

Neighborhood Collectors. Neighborhood collector streets are designed to connect local streets to arterials. Typically, neighborhood collector streets have limited driveway accesses and are built to accommodate localized populations in neighborhoods that are connected with the street.

B. Local Streets:

Local Streets. Local streets are the most common roadways and make up neighborhood roadways. Local streets typically contain a majority of driveway access points within an urban location and see minimal traffic from residents outside of the area.

Table 9.2 Non-Arterial Streets

	NON-ARTERIAL STREETS	
	Neighborhood Collector	Local
Function	- Connect Local to Arterials - Provide local access - Accommodate short trips to neighborhood destinations - Limited Driveway Access.	- Provide local access
Minimum Right of Way Width (1)(2)	60 feet	60 feet
Lane Width	10 feet (min)	10 feet (min)
Parking Lane Width	8 feet	8 feet
Curb to Curb Width(3)	28 feet in R-1 through R-4 Zoning 36 Feet in zones greater than R-4	28 feet in R-1 through R-4 Zoning 36 feet in zones greater than R-4
Parking	One Side	One Side
Sidewalk Width	5 feet	5 feet
Planter Strip Width(4)	5 feet (greater than R-4) 8 feet (R-1 through R-4)	5 feet (greater than R-4) 8 feet (R-1 through R-4)
Half Street Width(5)	20 feet	20 feet
Design Speed (mph)	25	25
Daily Volumes (ADT)	< 1,500-5,000	< 1500
Striping	No centerline striping	No centerline striping
Buses/Transit Stops	Allowed for short segments None (School Only)	Not allowed
Bicycle Facilities	Shared lanes/signs	No specific bicycle facilities; may have signed route
Pedestrian Facilities	- Pedestrian access through use of sidewalks, trails, or other	- Pedestrian access through use of sidewalks, trails, or other

(1)Does not include easements for public and private utilities.

(2)ROW may be increased to accommodate additional Parking or Low Impact Storm Drainage facilities.

(3)Minimum Width - Land Use Density or Offsite Parking Provisions may require more on-street Parking.

(4)Does not include curb.

(5)Minimum width includes Ten-foot lanes and One-foot shoulders.

9.3. Alley

Alleys are considered private roads and are governed by the following criteria.

A. Allowed for primary access only when lots served have full frontage on a public street.

B. Serves a maximum of 30 lots, with a maximum length of 400 feet, no cul-de-sacs, and no dead ends if serving more than four lots.

C. When an alley is to be provided with utilities, the alley shall be located within a utility easement.

D. Minimum alley tract (easement if circumstances require) width of 20 feet with a pavement surface of 16 feet (including thickened edge), based on a ten-foot structure setback from property line or edge of tract (easement). For differing structure setback requirements, alley configuration shall be designated to provide for safe turning access to properties.

E. Alleyways shall be provided with a paved surface, a thickened edge on one side and cross slope in one direction.

F. Alleys will be allowed only when lots have frontage on a public street.

G. Alley entry shall be provided by a driveway cut.

H. Construction and inspection standards for public roads shall also apply to alleys unless otherwise noted within these standards.

I. Alleys shall contain no intersections or any 90-degree bends. Any alignment other than straight shall be approved by the Public Works Director.

9.4. Woonerf

Woonerfs are considered private ~~streets~~ and are governed by the following criteria.

A. Pedestrian friendly design.

B. Clear distinct entrance.

C. Required on-street parking. Parking can be parallel or perpendicular and grouped together. Parking is located off the access width of the Woonerf.

D. Traffic calming measures are required.

E. Must incorporate outdoor furnishings such as benches and landscaping.

F. Serves a maximum of 30 lots, with a maximum length of 400 feet, no cul-de-sacs, and no dead ends if serving more than four lots.

G. When an woonerf is to be provided with utilities, the alley shall be located within a utility easement.

H. Minimum ~~alley~~ tract (easement if circumstances require) width of 20 feet with a pavement surface of 16 feet (including thickened edge), based on a ten-foot structure setback from property line or edge of tract (easement). For differing structure setback requirements, woonerf configuration shall be designated to provide for safe turning access to properties.

I. Woonerf entry shall be provided by a driveway cut.

J. Woonerfs shall contain no intersections or any 90-degree bends. Any alignment other than straight shall be approved by the Public Works Director

K. Construction and inspection standards for public roads shall also apply to ~~alleys~~ woonerfs unless otherwise noted within these standards.

9.5. Private Street

A private street is a privately owned and maintained street providing vehicular access within a property or properties. Refer to Chapter 12.8 Private Streets and Alleys for more information.

A. Private Streets shall serve a maximum of 9 dwelling units.

B. Private Streets shall be located within a private access tract.

C. Where a private street connects to another public or private roadway, this shall be considered as an intersection and shall meet all requirements stated in these standards.

D. Construction and inspection standards for public roads shall also apply to alleys unless otherwise noted within these standards.

E. Private Streets shall not result in landlocking of present or future parcels, conflict with any transportation or street improvement plan, nor obstruct public street circulation.

Chapter 10. Access Management

Access management is a means to protect the safety, operations, and functional purpose of the street system while considering access needs. Access management aims to provide access to land development while simultaneously preserving traffic flow. Appropriate access management strikes a balance between the operation and function of a street with the demand for access to right-of-way. Safety, speed, and capacity are the main reasons to institute access management. Access management recognizes the interests of both landowners and roadway users in providing a transportation system that better meets the needs of all interests.

The City's street system provides mobility to the traveling public and direct access to properties. At times, these two purposes can conflict. For example, multiple accesses on a road segment may compromise safety, speed, and capacity.

The existing and future function of each street is critical in determining the number, location, and design of access points for access control. Access management extends beyond simply specifying the number and separation of driveways and access points. Access management includes roadway design elements, such as auxiliary lanes, medians, stopping sight distances, channelization, and land development issues such as sign standards, internal site layout, driveway/parking lot layout, and alternative travel modes.

10.1. General

A. **Authority.** The Public Works Director approves the design, number, and location of access points to City Right-of-Way. When changes in land use result in changes to the type and operation of access, the access location and design will be reviewed with the development plans and shall be constructed or modified to meet current standards.

B. **Shared Access.** Pedestrians and bicyclists are especially vulnerable to turning vehicles at right-of-way accesses. The consolidation of access points benefits pedestrians and bicyclists by reducing the number of conflict points along the right-of-way. Access design for pedestrian and bicycle facilities shall conform to Chapter 11, Access Design, and the City's Standard Plans.

C. **Backing into the Right-of-Way**. Driveways, parking, or loading areas that require backing maneuvers in a public street shall not be approved except for single-family or duplex residential uses on non-arterial streets.

D. **Maintenance.** Maintenance of driveway approaches and driveway culverts shall be the responsibility of the owner whose property they serve.

E. **Restriction of Turning Movements**. Turning movements may be limited where necessary for the safe and efficient movement of traffic, both on-site and off-site. Traffic control devices controlling traffic from private property shall be installed and maintained by the property owner at no cost to the City.

F. **Abandoned Access.** All abandoned driveway approaches on the same frontage shall be removed; and the curbing and sidewalk, or shoulder, and ditch section shall be restored to meet current standards.

G. **Temporary Access.** The City may grant temporary access to accommodate phased development of a site. Temporary access shall be removed, relocated, redesigned, or reconstructed after permanent approved access is constructed.

H. **New Development.** All new development shall be served by adequate vehicular access as follows;

1. The circulation system of development shall intersect with existing and anticipated streets abutting the site at safe and convenient locations;
2. The circulation system of development shall provide direct connections to adjacent developments (inter-parcel) where appropriate; and
3. Every lot upon which one or more building(s) is proposed to be erected, or a traffic generating use is proposed, shall establish direct access from the street right-of-way. Direct access is needed to provide public services such as fire protection, emergency medical service, mail delivery or trash collection.

10.2. Access Requirements

A. If a property has more than one frontage, for example a corner lot, the access shall be located on the street with lower functional classification.

B. Properties deemed to be within a transition area shall follow the more stringent requirements unless otherwise approved by the Public Works Director. All vehicular access to proposed development in commercial zones shall be from arterial classified streets, unless determined by the Public Works Director to be technically not feasible or in conflict with state law addressing access to state highways. All developments in commercial zones shall conduct a Traffic Impact Analysis per the PWS. Developments that create additional traffic that is projected to use local streets may be required to install appropriate traffic-calming measures. These additional measures will be identified and approved by the City's Traffic Engineer.

C. Direct access, including single-family, onto an arterial is allowed only when alternative access is not available, or when specifically allowed in the SMC.

D. One access point per property ownership/tax parcel is allowed. The Public Works Director may approve more than one access for new access when approved through a deviation and;

1. The project is for one single-family residence or one duplex:
2. The second access will serve a second, separate dwelling unit, and site conditions prevent a shared access.

E. If the project is for one single-family residence or one duplex, the Public Works Director may approve through deviation a circular driveway (two access and one-way ingress/egress) from one property/tax parcel under the following conditions:

1. The accesses are onto a local access street;
2. Each access width shall be 10 to 12 feet wide;
3. Each access is offset from property lines by at least five feet; and
4. The accesses have adequate sight distance.

F. If the project is for other than one single-family residence or a duplex and:

1. A Traffic Impact Analysis shows that the additional access point(s) is/are required to adequately handle driveway volumes, and that the additional access point(s) will not be detrimental to safety, capacity, and traffic flow on adjacent streets, or
2. The accesses have adequate sight distance.

Chapter 11. Access Design

All accesses shall be located, designed, and constructed to minimize traffic congestion and maximize public safety on the street system. This chapter provides location and design criteria for access at the right-of-way line, access approach in the right-of-way, and driveways internal to a property.

11.1. General

A. Access. Access to the right of way shall be designed as an access approach.

B. Design. The designers of proposed developments must consider the access and driveway profile to ensure that required grade transitions can be achieved while considering building setback, terrain, and grades.

C. Emergency Vehicles. All accesses shall be located and designed to readily accommodate emergency vehicles that would ordinarily respond at the particular establishment. For driveways designated as fire lanes and/or fire apparatus access roads, the design standards delineated in the International Fire Code and by the Fire Marshal shall also apply.

D. Traffic Control Devices. All on-site traffic control devices, including signs and pavement markings, shall meet the Manual on Uniform Traffic Control Devices (MUTCD) standards.

11.2. Access Width

The access width is measured at the right-of-way/property line. Table 11.1 provides maximum/minimum access widths. The Public Works Director may approve a wider access when warranted by a traffic study or the turning radius of the appropriate design vehicle. Minimum tract/easement widths shall be maintained onto the property a minimum of 20 feet from the right-of-way line or to the nearest property line of the most distant lot sharing the access.

Table 11.1 Access Widths

Access Types	NON-ARTERIAL STREETS		ARTERIAL STREETS	
	Width (FT)		Width (FT)	
	Min.	Max.	Min.	Max.
Residential	10	24	20	24
Commercial	15	26	20	36
Industrial	22	NA	25	35

11.3. Access Clearance

A. The minimum distance for a residential driveway shall be 35 feet or the posted speed limit as measured in feet (i.e. 40 mph is 40 feet), whichever is greater, from a side street, intersection or adjacent driveway. The distance shall be measured from the road right-of-way line to the nearest edge of the driveway.

B. Minimum driveway spacing along an arterial roadway shall be 75 feet. Accesses along an arterial shall be aligned across the street from other access.

C. Whenever a potential access exists to any property from both a public road and a private easement, the City may refuse access to the public road.

D. Accesses in non-arterial roadways shall be aligned across the street from each other where possible.

~~D.~~E. Unless otherwise noted, all measurements shall be from center of driveway to center of driveway.

11.4. Access Approach

A. A paved access approach shall be provided between the property line and the edge of pavement in the right-of-way.

B. The maximum change in access approach profile grade, within the right-of-way, shall be six percent within any 10 feet of distance on a crest vertical curve and 12 percent within any 10 feet of distance in a sag vertical curve, per Standard Plan 2-~~03~~ 01 Intersection Landing.

C. No portion of an access approach shall be allowed within five feet of a side property line in residential areas, or within nine feet in commercial areas, measured perpendicular to the side property line that is projected into the right-of-way, except:

1. On a cul-de-sac bulb as necessary for proposed residential access;
2. For a shared driveway.

D. An access approach, that crosses an open ditch section, will require installation of a culvert with a 12-inch minimum diameter and shall be adequately sized to carry anticipated stormwater flows.

11.5. Driveway

A. General

1. All driveway areas that are proposed to be abandoned or not used on the same frontage shall be removed and the curbing and sidewalk or shoulder and ditch section shall be properly restored in compliance with these PWS.
2. All driveways aprons shall be constructed of Portland cement concrete (PCC) or asphalt and shall be subject to the same testing and inspection requirements as curb, gutter, and sidewalk construction.
3. Joint use driveways serving two adjacent parcels are permitted upon formal written agreement by both property owners and approval of the Public Works Director. The agreement shall be a recorded easement for both parcels of land specifying joint usage. Joint use driveways shall be a minimum of 15 feet wide and paved along that portion which serves both parcels.
4. Grade breaks, including the tie to the roadway, shall be constructed as smooth vertical curves. The maximum change in driveway grade shall be eight percent within any 10 feet of distance on a crest and 12 percent within any 10 feet of distance in a sag vertical curve.
5. No commercial driveway shall be approved where backing onto the sidewalk or street will occur.
6. All driveway locations must be shown on the site development plans.

7. New driveway locations created by the development of property shall be combined whenever possible to create the fewest number of accesses onto a City street.
8. Combined driveways for adjoining properties are encouraged. In conjunction with the approval of a development, the City may require the applicant to provide an access and circulation easement to an abutting property, where joint access is reasonable, to serve future development
9. The maximum grade of a driveway within the right-of-way shall be 15%.

B. **Arterial Streets.**

1. No driveway may access an arterial within 75 feet (measured along the arterial) of an intersection of another.
2. No driveway access shall be allowed to an arterial street within 150 feet of the nearest right-of-way line of an intersecting street.
3. Within the limitations set forth above, access to arterial streets within the City shall be limited to one driveway for each tract of separately owned property. Properties contiguous to each other and owned by the same person are considered to be one tract.
4. Driveways giving direct access to arterials may be denied if alternate access is available.
5. Wherever a potential access exists to any property from both a public road and a private road or easement, the City may refuse access to the public road.
6. The Public Works Director and Metro Transit will determine the minimum separation that will be allowed between an existing bus stop and a proposed driveway.

C. **Residential Driveways.**

1. Residential driveways shall be constructed the maximum practical distance, but in no event less than 35 feet or the posted speed limit in feet, whichever is greater, from a side street or intersection. The distance is measured from the road right-of-way line to the nearest edge of the driveway.

~~2.~~ Wherever a potential access exists to any property from both a public road and a private road or easement, the City may refuse access to the public road.

D. **Width.**

1. Maximum driveway width is shown in Table 11.1 of this chapter.
2. Road approaches and/or ingress and egress tapers may be required in industrial and commercially zoned areas as directed by the Public Works Director. Tapers shall be designed per the Institute of Transportation Engineers publication "Transportation and Land Development" by V.G. Stover and F. Koepke.

11.6. Parking Lot Throat Lengths

A. Traffic signage in a parking lot must meet the MUTCD.

B. The required throat length at a parking lot access to public right-of-way is determined during the permit review process and is usually based on the Traffic Impact Analysis.

C. The throat length vehicle storage in parking lots is based on a typical vehicle spacing of 20 feet, but may be increased where larger vehicles can be expected.

D. The City may adjust the on-site throat lengths for accesses with two approach lanes, subject to the transportation analysis findings, roadway geometry, traffic volumes, and site layout.

E. On-site storage is measured from the right-of-way line to the first parking stall or drive aisle in a parking lot.

F. **Outbound:** The throat shall be of sufficient length to provide adequate storage of outbound vehicles without interference with on-site circulation. Outbound vehicle storage areas shall be provided to eliminate backup and delay of vehicles within the development.

G. **Inbound.** The throat shall be of sufficient length to prevent vehicles from spilling onto the street system, and from obstructing the adjacent street, sidewalk, or circulation within the facility.

Page intentionally left blank.

Chapter 12. Street Design

This chapter sets the minimum standards for the geometric street section.

12.1. Reconstruction

A. Reconstructed roadways shall be brought up to current standards to the maximum extent feasible. Any deviation must be approved per Appendix H, Engineering Deviation Criteria.

B. Transitions or tapers necessary to connect with existing roadway of a different width shall meet AASHTO and MUTCD standards. The minimum taper rate shall be the shift width (feet) multiplied by the posted speed (mph). See Figure 7.1.

12.2. Widths

A. Lane widths vary in range from 10 to 12 feet and are typically determined based on location, roadway type and desired characteristics. Lane widths for the City Streets by classification are listed in Chapter 9 Street Classification.

12.3. Vertical Alignment

A. The minimum vertical profile is one half (0.5) percent. Maximum profile grades vary by road classification and are listed in Table 12.1.

Table 12.1 Maximum Profile Grade

MAXIMUM PROFILE GRADE				
Local	Neighborhood Collector	Arterial – Collector	Arterial – Minor	Arterial – Principal
15%	*10%*	*10%*	*10%*	*9%*

(1) Maximum profile grades may be exceeded for 300 feet or less, upon approval of a deviation by the Public Works Director. Exceptions exceeding 15 percent will require approval by the Fire Department and the Public Works Director. Any road at 15% or greater shall be Portland Cement Concrete construction.

(2) Maximum profile grade applies to either the road centerline or the edge of pavement line, whichever is steeper.

Exhibit 3

12.4. Vertical Curve Criteria

A. Vertical curves shall be designed to meet the latest AASHTO guidelines for the appropriate design speed.

B. The maximum rate of vertical curvature (K) may not exceed 167 feet per percent change in grade on streets with curb and gutter. The minimum curve length shall not be less than 50 feet.

C. Stopping Sight Distance (SSD): SSD applies as shown in Table 12.2 Vertical Curve – Minimum Stopping Sight Distance.

1. SSD is based on an eye height of three and one half feet and the height of an object at two feet.
2. On downgrades exceeding three percent, the SSD shall be increased by the values shown in Table 12.2.
3. The Public Works Director may approve sag vertical curves on local access streets with stopping sight distance less than that in Table 12.2, through deviation.

Table 12.2 Vertical Curve – Minimum Stopping Sight Distance (in feet)

DESIGN SPEED	FLAT		DOWNGRADE	
	0%	3%	6%	9%
25	165	165	175	185
30	200	210	220	230
35	250	265	280	305
40	325	345	365	400
45	400	425	455	505

12.5. Horizontal Curve Criteria

A. Super elevation is not required in the design of horizontal curves on local streets, but may be needed to meet terrain and right-of-way conditions.

B. Calculate super elevation according to AASHTO “Low Speed Urban Streets” design methodology.

C. See Table 12.3. Horizontal Curve Design.

Table 12.3 Horizontal Curve Design (in feet)

Design Speed (mph)	20[1] Grades >10%	25[1]	30[1]	35	40
Center line Radius[2] Minimum (ft.)	100	150	300	470	See note[3]
Horizontal Sight Distance Minimum (ft.)	150	200	200	250	325
Min. Reverse Curve Tangent – Minimum (ft.)	0	0	0	200	200
Approach Tangent at Intersections[3, 4] Minimum (ft.)	50	75	100	200	300
Tangent between Curves Minimum (ft.)		50	50		
Minimum Run-Off Length (ft.)		80	90	100	115
Super elevation		Not Required AASHTO	Not Required AASHTO	8% Maximum Calculate run-off lengths: AASHTO Geometric Design	
6% Super elevation Horizontal Curvature Radius (ft.)		185	275	380	510
8% Super elevation, Horizontal Curvature for Radius (ft.)		170	250	350	465

Source: "Low Speed Urban Streets", AASHTO

1 *Use these criteria without super elevation*

2 *Radii based on crown section with 2% slope on each side of crown*

3 *Where super elevation is used, calculate runoff lengths according the WSDOT Design Manual.*

4 *Where a curved road approaches an intersection, these tangent sections must be provided on the approach to the intersection to provide for adequate sight distance for traffic control devices at the intersection. The distance shall be measured from the flow line of the through street. Where super elevation is used, calculate runoff lengths according the WSDOT Design Manual intersection. The*

distance shall be measured from the flow line of the through street. Where super elevation is used, calculate runoff lengths according the WSDOT Design Manual.

12.6. Street End

Streets end in a cul-de-sac, an eyebrow, or a hammerhead.

A. Turnaround facilities shall be provided at street ends where the street length from the nearest intersection is more than 150 feet measured from the centerline of intersecting street to end of dead-end street pavement.

B. Cul-de-sac street ends shall be constructed as follows:

1. Minimum right-of-way diameter across bulb section: 114~~1~~ feet in a permanent cul-de-sac, 84 feet in a temporary cul-de-sac, with bulb area lying outside straight-street right-of-way provided as temporary easement pending forward extension of the street.

   i. Right-of-way may be reduced, through deviation, provided that utilities and necessary drainage are accommodated on permanent easements within the development.

2. Minimum diameter of surfacing across bulb: 90 feet of paving in curb type road without parking. The diameter shall be increased a minimum of 8' for on street parking within the cul-de-sac.

3. Cul-de-sac Island: Required feature for any cul-de-sac. The island shall have full-depth vertical curb. Minimum diameter shall be 20 feet and there shall be at least 30 feet of paved traveled way in a curb type section around the circumference. Island shall be landscaped. The HOA or the adjacent property owners shall maintain the island.

4. Sidewalks shall be constructed on both sides of the stem and on the bulb.

C. A dead-end local street shall not be longer than 600 feet, measured from centerline of intersecting street to center of cul–de-sac. The maximum length may be extended to 1,000 feet if 50 or fewer potential lots are to be served and there is provision for emergency vehicle turnaround near mid-length.

D. The Public Works Director may require an off-street walk or an emergency vehicle access to connect a cul-de-sac at its terminus with other streets, parks, schools, bus stops, or other

pedestrian traffic generators, if the need exists. Off-street sidewalks shall be contained in the right-of-way or a sidewalk easement.

E. If a street is to be temporarily terminated at a property boundary during development and it serves more than three lots or is longer than 150 feet, a temporary bulb shall be constructed near the plat boundary. The paved bulb shall be 90 feet in diameter with sidewalks terminated at the point where the bulb radius begins. Removal of the temporary cul-de-sac, restoration, and extension of the sidewalk shall be the responsibility of the developer who extends the road.

F. The maximum cross slope of a street at the street end shall be 8 percent.

G. Partial bulbs or eyebrows shall have a minimum paved radius and an island configuration. Island shall be offset two feet from edge of traveled way.

H. A hammerhead per Standard Plan 2-32 Dead End Hammerhead, may be used to fulfill the requirement to provide a turnaround facility where the street serves (or will serve) four or fewer single-family residential units

12.7. Utility Locations

A. Utility structures shall be located in the amenity zone or at the back of sidewalk without encroaching onto private property, in the gutter line, or within the roadway as specified below.

B. New utility structures are not allowed in sidewalks, driveways, driveway approaches, or any portion of a curb ramp or landing.

C. Underground systems shall be located at least five feet away from road centerline and where they will not otherwise disturb existing survey monuments.

Table 12.4 Underground Utility Locations

UTILITY	LOCATION FROM CENTERLINE	COVER	NOTES
Water Main[1]	Five to ten feet north and east	Minimum 24-inch cover from finished grade.	
Water Service	N/A	Minimum 24-inch cover from finished grade.	For any one connection, not extend more than 60 feet along or through the right-of-way, or the minimum width of the existing right-of-way. Stub out perpendicular to water main preferred
Water Meter Box	In the right-of-way, at right-of-way line/property line in the one-foot setback between the back of sidewalk and right-of-way line. Not to be located within a driveway.		
Sanitary Main[1, 2]	Five feet south and west	Minimum 36-inch cover from finished grade.	Stub out perpendicular to water main preferred
Force Main Side Sewer	Within 10 degrees of perpendicular-to-road centerline, and extend to right-of-way line.	Minimum 36-inch cover from finished grade, ditch bottom or natural ground,	If nonmetallic, install wire or other acceptable proximity detection features; or place in a cast iron or other acceptable metal casing.
Gas Main	Five to ten feet south and west	Minimum 24-inch cover	
Power, telephone, fiber-optic cable, cable TV	Either side	Minimum 36-inch cover	

1 *Sanitary sewer and water lines shall be separated by a minimum of 10 feet in accordance with good engineering practice such as the Criteria for Sewage Work Design, Washington Department of Ecology, latest edition.*

2 *Gravity systems, whether sanitary or storm drainage, shall have precedence over other systems in planning and installation except where a non-gravity system has already been installed under previous approved permit and subject to applicable provisions of such permits or franchises.*

D. Electric utilities, power, telephone, fiber-optic cable, cable TV:

1. Utility poles or other appurtenances shall be located as far from the traveled way or auxiliary lane as conditions allow. No pole or appurtenance shall be located so that it poses a hazard to the general public. Utilities shall place and replace poles with primary consideration given to public safety.
2. Locations of poles shall be compatible with driveways, intersections, and other road features. A pole shall not interfere with sight distances, road signing, traffic signals, culverts, trees, etc.
3. Utility poles or other appurtenances shall be located at the back of ditches, unless an alternate location is approved.
4. Utility poles shall not be placed in sidewalks, curb ramps or landing areas unless approved by the city. Utility poles shall not impede ADA access in any way.
5. On principal and minor arterials, poles and obstructions shall be placed at least eight and one-half feet from face of curb.
6. On non-arterial streets (neighborhood collectors, local access), poles and obstructions shall be placed at least five and one-half feet from curb face.
7. Deviations from the pole and obstacle clearance criteria may be requested by utilities when there are no other viable alternatives. Deviation requests must identify adequate protection for motorized and non-motorized users. Deviations requests must comply with the deviations criteria contained herein.

12.8. Private Streets and Alleys

A. Private street and alley design and installation must meet ADA requirements.

B. An access approach shall connect the private street to the public right-of-way and is to be considered as an intersection. Alley entry shall be provided by a driveway concrete apron. Alleys will only be allowed when lots have frontage on a public street. See Chapter 9.3, Alley, for additional criteria associated with alleys.

C. Private streets or alleys must be paved with either concrete or asphalt. If parking on the private street is requested, an additional eight feet of pavement and tract width shall be provided on each side of the street where parking is to be allowed.

D. Pedestrian access at least five feet in width shall be provided on at least one side of the private street, except for projects with ~~two~~ four dwelling units or less. The pedestrian access shall be separated by a curb or other acceptable delineation. Parking is not permitted in the pedestrian access areas. Street lighting systems for private streets shall be designed and constructed on a separate power source from the public street system lighting and shall be the responsibility of the property owner, homeowner, or homeowner's association for operation, ownership, maintenance and repair.

E. See Table 12.5. Private Street Dimensions.

Table 12.5 Private Street Dimensions

NUMBER OF SINGLE-FAMILY LOTS	TRACT OR EASEMENT WIDTH (FT)	PAVEMENT/TRAVELED WAY WIDTH (FT)	MAXIMUM LENGTH (FT)
*Private Street (3~~4~~ **or** ~~fewer~~ 4 dwelling units)*	*26 (with an additional 6 feet utility easement outside tract)*	20	150*
Private Street (~~4~~ 5to ~~9~~30 dwelling units)	30	24	150*
*Alley (Residential only, no more than 30 dwelling units)***	20	20	400 max.

* *The dimensions may be adjusted by the Fire Department without a deviation.*

** *Secondary Property Access Only*

12.9. Dead End Street

A. Dead end streets shall be permitted only where there is no feasible connection to an adjacent street or if topographic or existing forested areas prevent such connections. Half streets, which do not provide for future full right-of-way width, shall not be allowed.

B. A dead end local street shall not be longer than 600 feet, measured from the centerline of the intersecting street to the center of cul-de-sac. The maximum length may be extended to 1,000 feet if 50 or fewer potential lots are to be served and there is a provision for emergency vehicle turnaround near mid-length.

C. Where possible, a pedestrian access shall be required to connect a cul-de-sac to adjacent streets, parks, schools, or other pedestrian facilities. The pedestrian access shall be in right-of-way or if approved, placed in a sidewalk easement. A turnaround facility shall be provided for a public or private dead end street where the street length is more than 150 feet, measured from the centerline of the intersecting street to the end of the dead-end street pavement.

D. A dead end street requires a hammerhead (allowed with approval from Fire Marshall for four lots or less) or cul-de-sac as a turnaround. Cul-de-sacs shall meet the following requirements:

1. The minimum right-of-way diameter across bulb section is 114~~1~~ feet for a permanent cul-de-sac or 84 feet for a temporary cul-de-sac.
2. The minimum diameter of surfacing across the bulb is 90 feet of paving without parking. The diameter shall be increase a minimum of 8’ for on street parking within the cul-de-sac.
3. A 5’ amenity strip is required around the diameter of the cul-de-sac.
4. A Cul-de-sac Island: Required feature for any permanent cul-de-sac. The island shall have full-depth vertical curb. Minimum diameter shall be 20 feet and there shall be at least 30 feet of paved traveled way in a curb type section around the circumference. Island shall be landscaped. The HOA or the adjacent property owners shall maintain the island.

5. At least for public streets, a landscaped median is required in the center of a cul-de-sac. The median will be maintained by the HOA or adjacent homeowners.

Page intentionally left blank.

Chapter 13. Intersection Design

The design criteria in this chapter apply to street intersections. Intersections include driveway access as well as an approach to a street.

13.1. General

Intersection design shall conform to the guidelines set forth in AASHTO A Policy on Geometric Design of Highways and Streets, the ITE Urban Street Geometric Design Handbook, and the Manual on Uniform Traffic Control Devices (MUTCD). Refer to the WSDOT Design Manual for state highways. All intersection designs shall meet the requirements for entering sight distance and stopping sight distances as stated in the above reference standards. Deviations from these standards may be requested through the deviation process contained herein.

13.2. Alignment

A. The angle of an intersection of two streets or alleys shall be 85° to 95°.

B. The extension of the centerline of each leg of an intersection shall not be offset by more than two feet into the oncoming lane.

13.3. Spacing

A. The minimum distance between adjacent intersecting streets (both public and private) shall be measured from centerline to centerline. Minimum intersection spacing along a specific street classification shall be:

1. Principal Arterial: 350 feet.
2. Minor Arterial: 300 feet.
3. Collector Arterial: 200 feet.
4. Residential Collector: 150 feet
5. Local Street: 150 feet
6. Alley and Woornerf: No intersection allowed.

13.4. Design Vehicles

A. Intersections shall be designed to accommodate the design vehicle appropriate for the highest classified street forming the intersection.

B. The intersection design shall accommodate the use of the roadway as a designated truck route, bus route, or school bus route.

C. The minimum design vehicle for a local roadway is the SU-30, although use of larger design vehicles may be required depending on roadway classification, transit routes, truck routes, adjacent land use, etc.

D. All elements of the intersection shall be designed so the design vehicle will not encroach onto curbs, sidewalks, traffic control devices, medians, or the travel lanes of opposing traffic flow.

13.5. Curb Radii

A. Curb radii design must balance vehicle-turning movements with pedestrian safety. Typically, it is appropriate to use the smallest turn radii possible that still accommodates the design vehicle.

B. For design, curb radii shall be rounded up to the nearest five-foot increment.

C. Curb radii based on street classification are shown in Table 13.1, Typical Curb Radii Design Values. However, these values may be impacted by site conditions, including width of receiving lanes, on-street parking, and angle of intersecting roadways. Final required curb radii will be determined by the City.

Table 13.1 Curb Radii Design Values

STREET CLASSIFICATION (for highest street classification at intersection)	RADIUS
Arterial to Arterial	25 feet
Arterial to Local Street	20 feet
Non-Arterial to Non-Arterial Street	20 feet
Non-Arterial to Private Street	10 feet
Non-Arterial to Alley	10 feet
Transit/Truck Route	30 feet
Where vehicular turn is prohibited	10 feet
Radii for curb setbacks and bulb-outs	15 feet

13.6. Drainage

A. An intersection shall be laid out and graded so that surface water drains away from the intersection to the curb, and the intersection is safe and accessible for vehicles, pedestrians and bicyclists.

B. Drainage structures shall not be placed in an ADA ramp or landing area.

C. Drainage structures shall be located outside the corner radii.

D. Drainage structures shall be placed at the upstream side of crosswalks and ADA ramp areas to reduce runoff or ponds in these locations.

13.7. Intersection Grades

A. Intersections shall be on grades as flat as practical.

B. At an unsignalized intersection, the maximum allowable grade in the intersection is four percent (4%) extending a minimum of 50 feet in each direction, measured from the outside edge of the traveled way of the intersecting street. Grades above two percent may be allowed only in areas with steep topography or other unusual circumstances that prevent a flatter grade and only with an approved deviation request.

C. At signalized intersections, the maximum grade is two percent (2%) within the intersection, extending extends 200 feet in each direction. Grades above two percent may~~will~~ be allowed only in areas with steep topography or other unusual circumstances that prevent a flatter grade and only with an approved deviation request.

D. On sloping approaches at an intersection, landings shall be provided with grade not to exceed a one-foot difference in elevation for a distance of 30 feet approaching an arterial or 20 feet approaching a collector or local street, measured from future right-of-way line (extended) of intersecting street. See Standard Plan 2-03 Intersection Landing.

E. The point of vertical curvature shall not encroach into a cross street any farther than the center of pavement of the cross street.

13.8. Pedestrian Treatments

A. In order to provide pedestrian safety, accommodations for pedestrians shall be designed into all intersections. Pedestrian accommodations include sidewalks, crosswalks, trails, pedestrian refuge islands, ADA elements for disabled persons, etc.

B. Vaults, covers, castings, drainage grates shall not be placed within the crosswalk, or within crosswalk curb ramps or landing areas.

C. When allowed by an approved deviation to be placed in the pedestrian areas, catch basin, junction box solid covers etc. shall have non-slip covers. The non-slip surface shall be a non-grit, metallic alloy surface with a hardness of up to 62 on the Rockwell “C” scale, SlipNOT or equal. Diamond or checker plate surfaces are not considered equal. Manhole covers shall have non-slip low profile waffle tread when approved by deviation to be placed in sidewalks, pathways, crosswalks, or other pedestrian use areas. All covers within a sidewalk shall meet current ADA and PROWAG requirements.

D. Crosswalks, as defined by RCW 46.04.160, at intersections are delineated by one or more of the following:

1. Projecting the curb and back of sidewalk lines across the street;
2. A line 10 feet behind the face of the curb or roadway pavement, when there is no sidewalk; or

3. Crosswalk markings.

E. Curb Ramps

1. Consistent with the American with Disabilities Act (ADA), all projects, including alteration and new construction, shall meet ADA requirements and standards.
2. Curb ramps shall be fully within the crosswalk and shall align with the adjacent crosswalk. No utility boxes, utility box lids, drainage inlets, signs, and other fixed objects shall be located within the ramp.
3. The landing at the top of the ramp shall be four feet by five feet at a minimum, and shall be clear of all vertical obstructions.
4. Utility box lids shall not be located in the landing area. In situations where there are no other options, with an approved deviation, a junction box can be allowed if it is made skid resistant per WSDOT specifications.

F. Compliant curb ramps with tactile warning strips shall be installed at each corner of an intersection where possible and corresponding companion ramps (ramps directly across the street of a new ramp) shall be retrofitted or constructed per RCW 35.68.075.

G. When street paving impacts an intersection or a modification to a curb ramp occurs, the curb ramps must be retrofitted to meet the current curb ramp standard. For the purposes of this specific item, impact to an intersection is defined as:

1. Nine square feet or more of disturbance to the sidewalk within the area bounded by the curb, the right-of-way or property lines, and the extension of said curb, right-of-way or property lines across the sidewalk; or
2. Three lineal feet of disturbance to the curb; or
3. Development projects requiring installation of frontage improvements; or
4. Roadway resurfacing defined as an alteration by the 2013 “Department of Justice/ Department of Transportation Joint Technical Assistance on Title II of the Americans with Disabilities Act requirements to provide curb ramps when streets, roads, or highways are altered though resurfacing”. This includes asphalt overlays or addition of new asphalt/concrete roadway surface.

5. See Chapter 9, Street Classification, for required sidewalk widths.

13.9. Clear Sight Triangle

The following applies to:

- The intersection of two public streets;
- The intersection of a commercial driveway with a public street;
- The intersection of a residential driveway with a public street; and
- The intersection of a private street or alley with a public street.

A. **Obstructions:** Sight obstruction is defined as parked vehicle, signage, fencing, landscaping, or other obstruction installed, set out, or maintained, which obstructs the view of motor vehicle operators at an intersection within a clear sight triangle area and between the height limits.

1. Intersection Other Than Single-Family Residential. Sight obstruction shall not be allowed between a height of three~~two and one-half~~ feet and ten~~seven and one-half~~ feet above the street surface within the sight triangle established by this section. Sight obstructions above seven and one-half feet above the street surface are allowed.
2. Intersection with a Residential Driveway. Sight obstruction is not allowed between ~~two and one-half feet~~three and seven~~six~~ feet above the street surface.
3. Landscaping, street furniture, marquees, awnings, or other such obstructions must not obscure sight lines to traffic control devices, such as signs or signals.
4. For intersections not clearly included in the above types and for which view problems may exist, the Public Works Director will establish setback lines as required.
5. Where unusual conditions preclude the application of this subchapter in a reasonable manner, the Public Works Director may establish minimum sight distances. These minimum sight distances may be more restrictive than provided herein.

~~B.~~ **Residential Driveway**: ~~For~~ T~~t~~he intersection of a residential driveway with a public street shall be considered as a stop controlled intersection.~~, the sight distance triangle for a site access point shall be determined by measuring 15 feet along the street edge and 15 feet along the edges of the driveway beginning at the respective points of intersection. The required sight~~

~~line each triangle shall be a line connecting the end points of the first two sides of each triangle. (See Figure 13.1)~~

~~Figure 13.1 Clear Sight Triangle – Residential Driveway~~

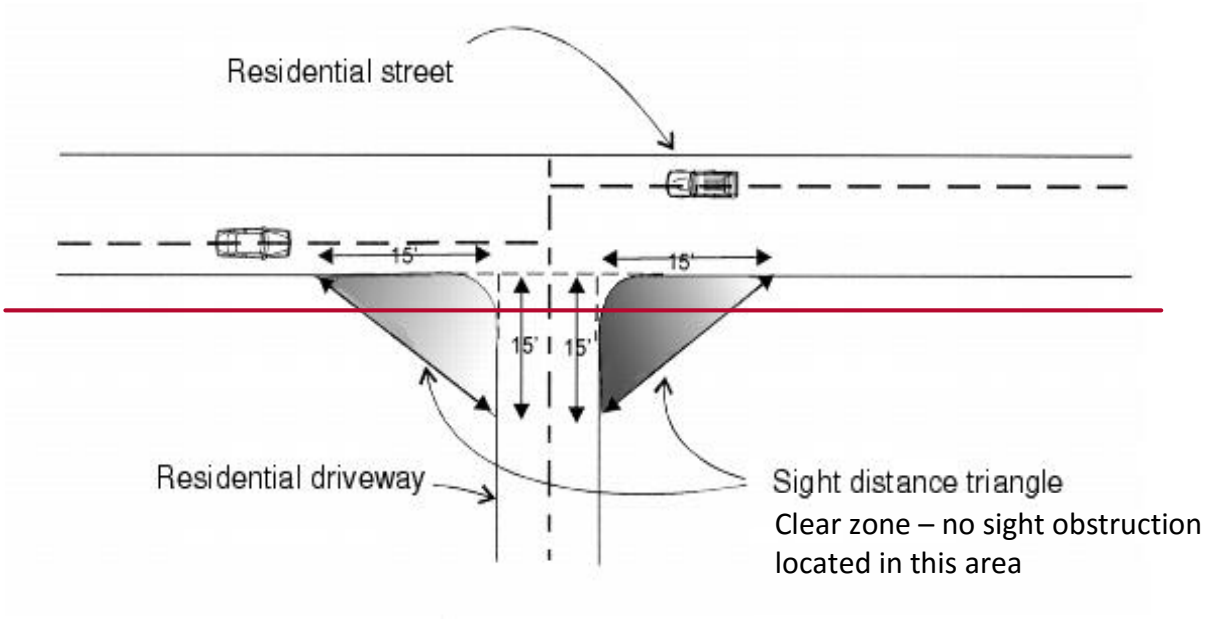

~~C.~~B. **Uncontrolled Crossing Intersection**. The setback lines are measured along the centerlines of each approaching roadway. Setback measurements are based on approaching street speed limit. See standard details.~~The setback line begins at a point 50 feet from the center of the intersection, and then extends to a part that is located 80 feet along the intersecting roadway to the right and left of the intersecting point. (See Figure 13.2)~~

~~Figure 13.2 Clear Sight Triangle – Uncontrolled Crossing Intersection~~

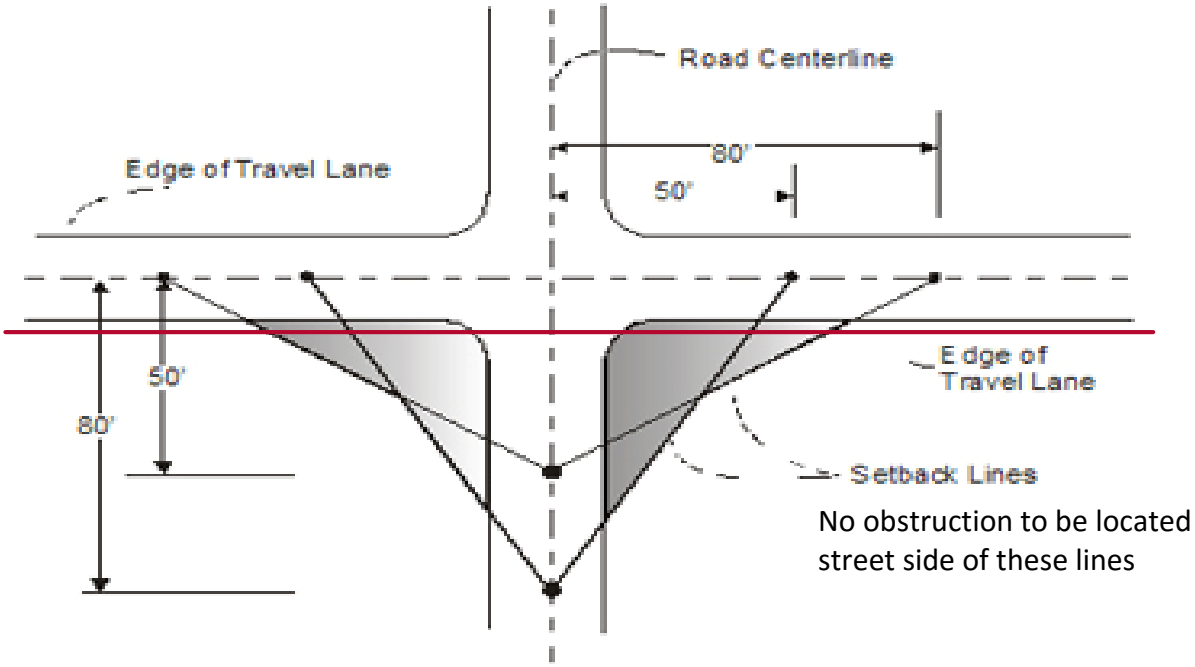

~~D. Yield Intersection and T Intersection~~Stop-Controlled Intersection: - The setback lines are measured along the centerlines of each approaching roadway. Setback measurements are based on approaching street speed limit. See standard details. ~~Yield intersections have a yield sign on one or both of the minor street approaches. The setback lines are determined by points along the center of each travel lane, and the center of the intersection. The setback line begins at a point located 25 feet from the nearest edge of the intersecting travel lane. The setback lines then extend to a point 100 feet right and left from the center of the intersection following the center of the travel lane. (See Figure 13.3)~~

~~E. Figure 13.3 Clear Sight Triangle – Yield and T Intersections~~

Exhibit 3

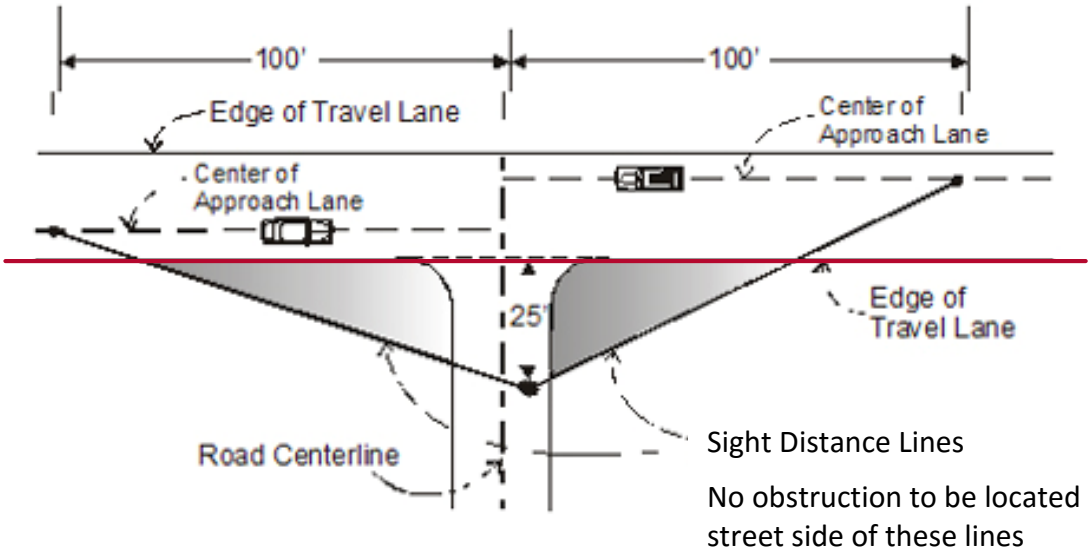

13.10. Pedestrian Sight Distance

A. The minimum sight distance for pedestrian safety shall be determined as follows: the driver of an existing vehicle shall be able to view a one-foot-high object 15 feet from either edge of the exit lane at the driveway throat when the driver's eye is 14 feet behind the back of the pedestrian walkway.

B. The minimum sight distance shall be maintained at all driveways, buildings, garage entrances, etc. where structures, wing walls, etc., are located adjacent to or in close proximity to a pedestrian walkway.

13.11. Roundabout Intersection

Roundabout intersections shall be designed in accordance with the specifications as set forth in the WSDOT Design Manual and WSDOT/APWA Standard Specifications unless otherwise authorized by the City.

13.12. Signalized Intersections

Signals systems shall be designed in accordance with the specifications as set forth in the WSDOT Design Manual, WSDOT/APWA Standard Specifications and King County Standards unless otherwise authorized by the City.

Page intentionally left blank.

Chapter 14. Non-Motorized Facilities

14.1. General

A. Non-motorized facilities and associated amenities shall be provided when required by state or federal regulations, the municipal code and/or public works standards, when planned in an adopted City plan, or when needed to ensure safe walking/biking conditions as mitigation through a traffic impact analysis.

B. All facilities shall meet Americans with Disabilities (ADA) requirements and/or Forest Service Trail Accessibility Guidelines (FSTAG), as applicable.

C. All facilities located outside the Right-of-Way shall meet the approved city trail standards unless an alternative standard is required or approved by the Parks and Recreation Director.

14.2. Sidewalks

Sidewalks are required on all streets, except alleys. Sidewalk shall be required on private street and street endings, See Chapter 12 Street Design.

A. All designs shall meet the current Americans with Disabilities Act (ADA) and Public Right of Way Accessibility Guidelines (PROWAG) requirements and standards. Refer to Chapter 13 Intersection Design for curb ramp requirements.

B. Sidewalks shall be located between the property/right-of-way line and the amenity zone unless otherwise approved by the Public Works Director.

C. Sidewalk widths shall follow the minimum requirements as stated in Chapter 9, Street Classifications, based on the classification of the roadway.

D. The required width of a sidewalk may be greater than required by those stated in Chapter 9 when in accordance with the adopted Town Center Plan/Infrastructure Plan, or other adopted City plan or regulation, or, as part of a mitigation requirement through review that determines that greater widths are warranted due to expected pedestrian traffic volume.

E. Sidewalks shall be separated from the roadway with an amenity strip.

F. Sidewalks shall maintain their full width around obstructions that cannot be relocated.

G. When a sidewalk must transition to the existing frontage that does not have a sidewalk, the transition shall meet ADA requirements. Generally, an asphalt transition is acceptable. Refer to Standard Plan 3-11 Temporary Asphalt Transition Ramp to Shoulder.

H. Parking stalls shall be designed and constructed so that no part of any parked vehicle obstructs the Pedestrian Access Route as defined by ADA and sidewalk. For example, vehicle overhangs of a Pedestrian Access Route would require that the minimum required sidewalk width be widened by 3-feet to maintain the minimum five-foot clear width.

14.3. Bicycle Facilities

A. Bicycle facilities shall meet the standards of the AASHTO Guide for Development of New Bicycle Facilities, MUTCD – Manual for Unified Traffic Control Devices, and WSDOT – Washington State Department of Transportation.

B. Facilities shall be designed for uniformity in design, signage and pavement marking for bicyclist and motorist safety.

C. Direction of travel for on-street bicycle facilities shall be in the same direction as the motor vehicle traffic, unless in facilities such as a cycle tract that are designed to protect bicycle travel.

D. Vaned grates or solid lids shall be used on catch basins within bicycle facilities.

14.4. Regional Trails

Regional Trails are multi-use trails that provide recreation and transportation connections through the City to neighboring communities and other trail systems. Regional trails can be either paved or soft surface.

Regional Nature Trails are trails that provide recreation for pedestrians and/or equestrians and are soft surface trails (e.g. Emerald Necklace Trail).

A. Widths:

1. Regional Trails shall be at least ten feet in width, and twelve feet is preferred. Regional Nature Trails shall be a minimum of 10 feet wide unless topography or other limitations are present.
2. A minimum two-foot graded shoulder is required on either side of a Regional Trail. A wider graded shoulder may be required when heavy pedestrian use is anticipated, or in accordance with an adopted City regulation or plan. A minimum one-foot wide shoulder is required on either side of a Regional Nature Trail.
3. A five-foot horizontal clear zone shall be maintained on either side of the trail.
4. Maintain a minimum of a 10-foot vertical clear zone.

14.5. Connector Trail

Connector Trails are important linkages between key areas within the City such as the Town Center. These multi-use trails can be paved or soft surface, and shall be located within a public easement or public right-of-way.

A. Widths:

1. Connector Trails shall be a minimum six feet wide.
2. A minimum two-foot graded shoulder is required on either side of the trail. A wider graded shoulder may be required when heavy pedestrian use is anticipated, or in accordance with an adopted City regulation or plan.
3. A five-foot horizontal clear zone shall be maintained on either side of the trail.
4. Connector Trails shall have a minimum of a 10-foot vertical clear zone.

14.6. Local Trail

Local trails are used as neighborhood link trails or internal park trails. These multi-use trails can be paved or soft surface, and shall be located within a public easement or public right-of-way.

A. Width:

1. Local Trails shall be a minimum four feet wide.
2. A minimum two-foot graded shoulder is required on either side of the trail.
3. A five-foot horizontal clear zone shall be maintained on either side of the trail.
4. Local Trails shall have a minimum of a 10-foot vertical clear zone.

14.7. Nature Trail

Nature Trails are soft surface trails used by pedestrians and often built within natural environments that are constrained with steep terrain and/or critical areas.

A. Width:

1. Nature Trails shall be a minimum two feet wide, and may be required to be between two and six feet in width.
2. A minimum one-foot graded shoulder is required on either side of the trail.
3. Nature Trails shall have a minimum of an 8-foot vertical clear zone.

14.8. Waterway Trail

Waterway trails provide access to waterbodies within the City such as Beaver Lake, Pine Lake and Lake Sammamish. These trails are used by pedestrians for transporting non-motorized personal water craft from parking areas to designated water access points and should be accessible. Trails along waterbodies that access adjacent land areas shall follow local trail standards.

A. Waterway Trail Width:

1. Shall be a minimum three feet wide, and may be required to be between three and six feet in width.
2. A minimum of two-foot graded shoulder on each side is required.
3. A five-foot horizontal clear zone shall be maintained on either side of the trail.

~~4.~~ Waterway Trails shall have a minimum of an 8-foot vertical clear zone.

Exhibit 3

14.9. Amenities

Amenities provide non-motorized users conveniences and include such items as benches, garbage receptacles, bicycle racks, and pet stations. The following is a list of some of the standard City of Sammamish amenities. Those not listed must be approved by the Parks and Recreation Director.

A. Benches:

1. Fair Weather, Plaza Series, Model PL-1.3, powder coated black semi-gloss finish. Manufacturer: Fair Weather Site Furnishings (www.fairweathersf.com), or equivalent.

B. Fair Weather, Plaza Series, Model PL-3, powder coated black semi-gloss finish. Manufacturer: Fair Weather Site Furnishings (www.fairweathersf.com) , or equivalent.

C. Trash Receptacles

1. Fair Weather, Model TR-12, 35-gallon liner, spun dome top, powder coated black semi-gloss finish. Manufacturer: Fair Weather Site Furnishings (www.fairweathersf.com) , or equivalent.

D. Bike Rack

1. Fair Weather, Model BR-1.5, powder coated black semi-gloss finish. Manufacturer: Fair Weather Site Furnishings (www.fairweathersf.com) or Huntco BR-5, powder coated black semi-gloss finish. Huntco Supply (www.huntco.com) , or equivalent.

E. Pet Stations

1. DOGVALET, Model 1005-2, Poly, Forest Green. Manufacture: DOGIPOT (http://www.dogipot.com/), or equivalent.

Page intentionally left blank.

Chapter 15. Roadside Features

15.1. Fixed Objects

A. Locate fixed objects so that vehicle and pedestrian sight distance meets the standards in Chapter 13 Intersection Design of this document.

B. Standard clearances shall be met in accordance with Table 15.1 Standard Horizontal Clearances and Table 15.2 Standard Vertical Clearances.

Table 15.1 Standard Horizontal Clearances

FROM	TO	STANDARD CLEARANCE
Curb Face	Closest part of any fixed object (excluding traffic control signs and signals and parking meter posts)	2 feet
Textured Surface of Wheel Chair Ramp	Closest part of any fixed object	1 foot
Edge of Sidewalk	Stair riser	2 feet
Utility or Light Pole Face, Fire Hydrant	Closest part of any fixed object (excluding traffic control signs and parking meter posts)	5 feet

Table 15.2 Standard Vertical Clearances

FROM	TO	STANDARD CLEARANCE
Roadway Surfaces	Any horizontal projection over surface: measured from the crown of the street to the lowest portion of the structure.	16 feet
Sidewalk Surfaces	Any horizontal projection over the surface	8 feet
Roadway Surfaces	Tree limbs	14 feet
Alley Surfaces	Any horizontal projection over paved surface	14 feet
Bicycle Path Surfaces	Any horizontal projection over surface	10 feet

C. Electrical Facilities. For projects that trigger installation of or adjustments to Puget Sound Energy (PSE) facilities, the applicant shall coordinate with PSE. Please visit the PSE website or PSE engineering for the most recent information on clearance requirements.

PSE and City staff will work closely with applicants to accomplish appropriate clearances required for design, during construction, and at final build-out. Communication and resolution of required clearances are critical to final design and construction approval of the proposal. Contact Puget Sound Energy for more information regarding service requirements.

15.2. Landscaping

The following criteria apply to landscaping improvements in the right-of-way. The landscaping design criteria in this section are based on transportation safety requirements and on minimum requirements for plants to achieve mature growth.

Please contact the City's Department of Community Development (DCD) for landscaping requirements on private property. This chapter applies to trees only where noted.

A. General

1. Any right-of-way landscaping disturbed by construction activity shall be replaced or restored to as existed or better condition.
2. All landscaping shall meet the sight distance and sight triangle requirements in Chapter 13, Intersection Design, of these standards.

B. Design Requirements

1. Plan
2. The right-of-way landscaping plan, shall be drawn to an engineering scale, and shall show property lines, plant and tree locations, right-of-way infrastructure, driveways, and intersections, as well as all specifications needed to install and inspect the installation.
3. Coordinate landscaping with transportation and utility plans. Adjust locations of trees to accommodate utilities, pedestrians, and sight distance.

4. Trees shall have maximum spacing of 35 feet on center starting 15 feet from the side property line (may be adjusted as approved by the City to allow a 10-foot clear zone on either side of a driveway)
5. Preserve existing trees and landscaping where possible.

C. Plant Selection

1. All plants shall conform to American Association of Nurserymen (AAN) grades and standards as published in the "American Standard for Nursery Stock" manual, provided that existing healthy vegetation used to augment new plantings shall not be required to meet these standards.
2. Plant selection shall consider adaptability to climatic, geology, and topographic conditions of the site.
3. New trees must be at least two-inch caliper measured six inches above the base and must be selected from the City-approved street tree list in Appendix F included herein. Ground cover plants must be at least four-inch pot, spaced 18 to 20 inches on center or one-gallon pot spaced at 20 inches on center. Low growth shrubs must be one-gallon pots spaced at three feet on center. Shrubs must be 18 to 24 inches in height (or three-gallon pot) spaced at five feet on center.
4. Location of trees shall be based on the plant's mature canopy and root mat width. For planting purposes, root mat width is assumed to be the same width as the canopy.
5. When right-of-way width allows, additional clearance distance must be provided from utilities.
    i. When right-of-way width is limited and the five-foot clearance cannot be met, the City will evaluate site conditions and may permit one or both of the following.
    ii. Tree installation less than five feet clearance from ductile iron or PVC pipe.
    iii. Tree installation less than five feet from concrete pipe that has rubber gaskets.
6. Adjust placement to avoid conflict with driveways, utilities, and other functional needs. Trees shall be placed:

i. 35 feet on center starting 15 feet from the side property line (must not obscure stop signs and street signs).

ii. Three and one half feet back from the face of the curb.

iii. Eight feet from underground utility lines (three feet with root barriers).

iv. 15 feet from power poles.

v. 10 feet from driveway edges.

vi. 20 feet from streetlights or existing trees.

vii. 30 feet from curb or edge of travel lane (where no curb exists) at street intersections.

viii. 10 feet from roadway edge where no curb is present.

ix. Mature tree and shrub root mats may overlap utility trenches as long as approximately 80 percent of the root mat area is unaffected.

x. Trees must be staked using five-foot tall staking, and root barriers between the tree and the sidewalk and curb.

xi. Mature tree and shrub canopies may not reach an above ground utility such as streetlights and power lines.

D. Soil

1. The landscaping plan shall provide soil specifications, including soil depths.
2. Improvements that include low impact development drainage facilities require specific specifications for the soils. Refer to current City of Sammamish Surface Water Design requirements general soil specifications.

15.3. Mailboxes

A. United States Postal Service (USPS) must approve all mailbox locations, including temporary relocations.

B. The approach to mailboxes must be clear of obstruction.

C. Refer to Standard Plans for mailbox placement.~~5.14 Mailbox Stand Non-Arterial and 5.15 Mailbox Stand w/o Amenity Zone.~~

D. During construction, existing mailboxes shall be accessible for delivery of mail.

15.4. Steps, Stairways

A. Steps and stairways, and associated landings from private property shall not extend into the right-of-way.

15.5. Pedestrian Railing

A. Railings in the right-of-way shall be consistent with Standard Plans 3-24 Pedestrian Railing, and shall be made of anodized aluminum, galvanized steel, or wrought iron.

B. Railing in the right-of-way shall be installed along a non-motorized transportation facility when there is a drop from the facility of 30 inches or more and:

1. The vertical wall face is less than four feet in horizontal distance from the near side face of the facility. See Figure 15.3, Case A.
2. The vertical wall face is greater than four feet horizontally to the near side face of the facility and the slope to the wall top is steeper than 1V:3H. See Figure 15.3, Case B.
3. The slopes adjacent to the facility average greater than 1V:2H. See Figure 15.3, Case C.

C. Railings in the right-of-way shall be installed along a non-motorized transportation facility when there is a vertical drop from the facility of 18 inches or more.

D. Pedestrian railings shall be designed in accordance with Standard Plans ~~3-24 Pedestrian Railing~~, and the WSDOT Standard Specifications.

Figure 15.3 Railing Scenarios

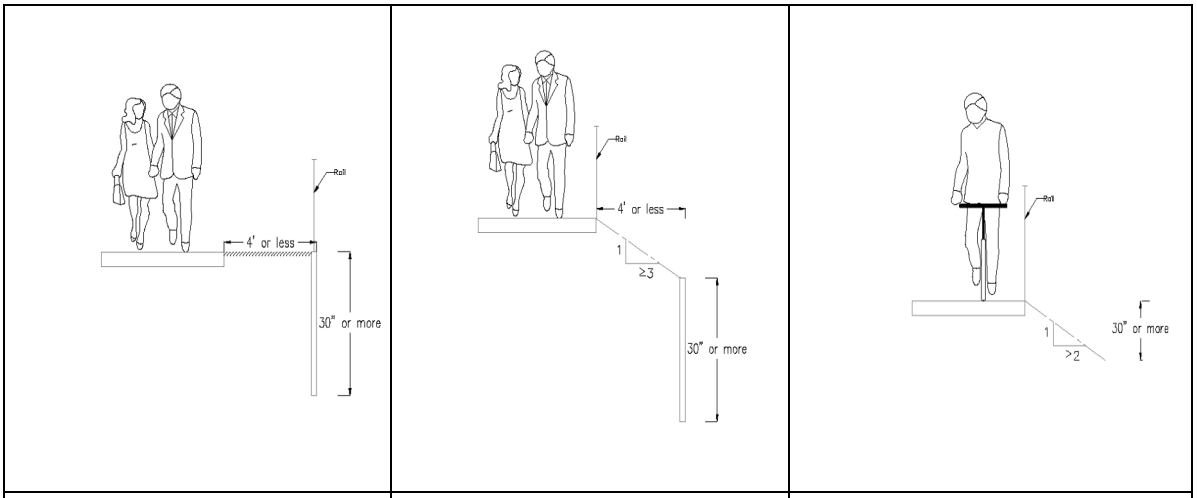

CASE A	CASE B	CASE C

15.6. Cut-and-Fill Slopes

A. Side slopes shall be 2H:1V or flatter on both fill slopes and cut slopes.

B. Side slopes shall be stabilized by grass sod or seed, or by other approved plant or surface materials.

15.7. Guardrail

Guardrail shall be provided and installed by the applicant as directed by the Public Works Director. For purposes of warrants, design, and location, all guardrails along public and private roadways shall conform to the criteria of the WSDOT Standard Plans and Specifications.

15.8. Bus Stops

In locations throughout the City, the transit provider recommends bus stop locations. The City shall work with the service provider to provide all final stop locations.

A. Locations of bus stops shall be designed with safety as a paramount concern. Major arterials with high traffic counts shall be avoided where possible and only allowed with approved bus pull-outs providing pedestrian safety.

B. All permanent bus stop locations shall be identified. This shall include pavement marking and approved signage.

C. Pedestrian shelters are required at all bus pull-outs, transfer centers, and bus stops as part of frontage improvements for developments. Shelters are to be maintained by the service provider, home owner's association, or apartment owner, whichever is appropriate.

D. Bus shelter design shall be approved by the Public Works Director.

E. Advertising is not permitted on bus shelters or benches when placed within the public right-of-way.

Page intentionally left blank.

Chapter 16. Surface Treatment

This chapter provides criteria for paving and for restoring traveled ways within the right-of-way.

16.1. General

A. Hard surfacing including asphalt concrete or Portland cement concrete (PCC) are required within the right-of-way.

B. Grades steeper than 20 percent (when approved by deviation) must be paved with PCC.

C. Use of permeable pavement in the right-of-way requires review and a deviation approval by the Public Works Director.

16.2. Asphalt Pavement Design

A. Arterial Streets

1. Any pavement for arterial streets shall consider the load bearing capacity of the soils, based on actual field tests, and the traffic-carrying requirements of the roadway.
2. The analysis shall include the traffic volume and axle loading, the type and thickness of roadway materials and the recommended method of placement. Pavement sections shall not be less than those required for collector arterials.
3. Pavement design must be prepared by an engineer licensed in Washington State who is proficient in pavement design. Soils tests are required to assess the California Bearing Ratio (CBR) for the subgrade.

B. Non-Arterial Streets

1. Minimum asphalt pavement sections are identified in Standard Plan 1-05 Typical Local Road as:

   i. Surfacing: Two inches of ~~Class B~~1/2-inch Hot Mix Asphalt (HMA)~~ Asphalt Concrete~~; plus

   ii. Base: Four inches of 1/2-inch ~~Class B Asphalt Concrete)~~HMA over six inches Crushed Surfacing Top Course (CSTC). In areas of pavement

restoration or adjacent to existing pavement, reconstruction shall at a minimum match the existing roadway section.

2. Poor Subgrade

   i. The minimum material thicknesses indicated herein are not acceptable if there is any evidence of instability in the subgrade. This includes free water, swamp conditions, fine-grained or organic soil, slides, or differential settlement. If there are any of these characteristics, the soil shall be sampled and tested sufficiently to establish a pavement design that will support the proposed construction. Any deficiencies, including an R-value of less than 55 or a CBR of less than 20, shall be fully considered and compensated for in the design.

16.3. Pavement Widening

A. Any widening of an existing roadway, either to add traveled way or paved shoulder, shall have the same surfacing material as the existing roadway. Or meet the minimum thickness standard in section 16.2.

B. When an existing shoulder is to become part of a proposed traveled way, a pavement evaluation shall be performed. The shoulder area shall match the existing roadway section or pavement design is required to determine if the shoulder is acceptable or if any improvements are necessary. Designs based on these evaluations are subject to review and approval by the Public Works Director. The responsibility for any shoulder material thickness improvement shall be considered part of the requirement for roadway widening.

Chapter 17. Traffic Control Devices

A. All traffic control devices shall conform to the Manual on Uniform Traffic Control Devices (MUTCD) and City of Sammamish standards.

B. All signs, such as street name, parking, stop, dead end, speed limit, and non-motorized indicators shall be approved as part of the project plan. The channelization plan showing pavement markings, permanent signing, and crosswalk locations shall be prepared by a licensed engineer.

C. Temporary traffic control to ensure traffic safety during construction activities shall be provided by the applicant and installed per MUTCD standards.

Page intentionally left blank.

DIVISION 3 – SURFACE WATER

Page intentionally left blank.

Chapter 18. Surface Water Standards

The following Surface Water Standards apply to all public and private development within the City.

The City of Sammamish has adopted the King County Surface Water Design Manual (KCSWDM) in order to comply with its NPDES II Municipal Stormwater Permit. The version will be as adopted by Ordinance. In addition, the City has adopted an addendum to this manual titled "City of Sammamish Surface Water Design Manual Addendum. This addendum is found at the following website:

http://www.sammamish.us/departments/publicworks/StormWaterManagement.aspx?page=developers

The City encourages the use of emerging storm water treatment technologies. Examples of emerging technologies include media filters, catch basin inserts, engineered erosion control products, and low impact development techniques. Proposed emerging technologies must be listed on either the Washington State Department of Ecology's Technology Assessment Protocol (TAPE) or Chemical Technology Assessment Protocol (CTAPE). The Public Works Director must approve the emerging technology for use.

Page intentionally left blank.

DIVISION 4 – CONSTRUCTION AND INSPECTION

Page intentionally left blank.

Chapter 19. Construction

19.1. Standards

Construction, workmanship, and materials shall be in accordance with the approved plans, permit conditions, and the standards referenced in this manual.

A. City of Sammamish Public Works Standard Details~~s~~

B. Latest edition of Standard Specifications for Road, Bridge, and Municipal Construction M 41-10, WSDOT.

C. Latest version of the adopted Surface Water Design Manual, ~~King County~~ together with "City of Sammamish Surface Water Design Manual Addendum.

D. Manual on Uniform Traffic Control Devices (MUTCD), Federal Highway Administration: http://mutcd.fhwa.dot.gov/

19.2. General

A. Work Hour Restrictions

1. Construction activities and noise shall meet the requirements of SMC 16.05.030.

B. Survey Monuments

1. Anyone performing construction, maintenance, or other work in Sammamish must protect all survey monuments within the area of work.
2. The applicant is responsible for all contractors working for him/her. If it is necessary to disturb a survey monument, the City Project Inspector must be notified and a permit from the Department of Natural Resources must be obtained before the disturbance occurs.
3. Failure to comply with Washington State requirements (RCW 58.04.015) regarding monument removal or destruction is a gross misdemeanor and is punishable by a fine and/or imprisonment, and liability for the cost of reestablishment.
4. Monuments shall be placed at the following locations:

i. All street intersections.

ii. At the points of curvature (PC) and points of tangency (PT) of all horizontal curves and at the point of intersection (PI) if it lies in the travelled roadway.

iii. At all DLC corners, section corners, quarter corners, and sixteenth corners that fall within the subdivision. Where these points fall outside of the pavement or sidewalks, a poured-in-place monument per City of Sammamish standards shall be set so that the top of the monument is one foot below the surface of the ground.

C. Vegetation

1. Drainage areas must be protected during construction. If an area has any type of channel/drainage swale that provides a hydrologic connection to a sensitive area(s) or wetland, the channel must also be protected throughout the construction phase by fencing and use of erosion control measures to prevent untreated construction site runoff from flowing into the channel.

2. Trees and tree root systems must be protected utilizing the following methods:

   i. Reducing soil compaction during the construction phase by protecting critical tree root zones;

   ii. Prohibiting the stockpiling or disposal of excavated or construction materials in the vegetation retention areas to prevent contaminants from damaging vegetation and soils;

   iii. Avoiding excavation or changing the grade near trees that have been designated for protection. If the grade level around a tree is to be raised, a dry rock wall or rock well shall be constructed around the tree. The diameter of this wall or well shall be at least equal to the diameter of the tree canopy plus five feet; and/or

   iv. Restricting trenching and excavation in critical tree root zone areas; (See Figure 19.1 Tree Protection Right of Way); and/or

v. Preventing wounds to tree trunks and limbs during the construction phase. In the event that a tree is damaged during construction, a licensed arborist shall inspect and determine if replacement is needed.

Figure 19.1 Tree Protection – Right-of-way

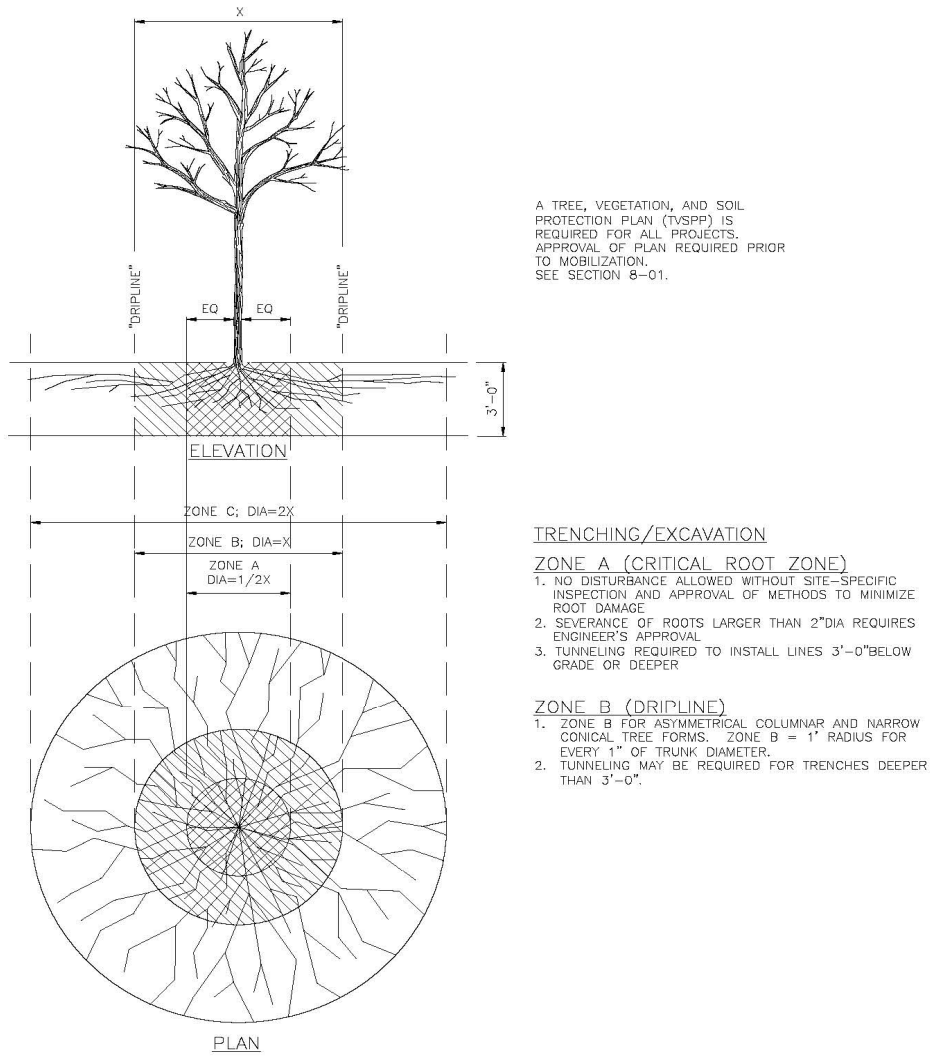

D. Permanent Traffic Control

1. All channelization and pavement markings, such as raised pavement markers, paint, thermoplastics, etc., shall be pre-marked by a City-approved striping contractor, and the layout approved by the City Inspector, prior to permanent installation by the contractor. Approval shall require a three working day advance notice.

2. The Applicant shall maintain traffic control devices in a condition acceptable to the City until the permit is final. The Applicant must maintain signs in good condition until the development and right-of-way are accepted by the City. Any damaged signs will be replaced by the applicant at her/his expense.

E. Cleanup, Incidental and Collateral Damage

1. The street right-of-way, material storage sites, construction staging areas, and all other areas affected by the work shall be left neat and presentable, and shall be fully restored to pre-existing or better condition.
2. Costs associated with site cleanup and restorations are integral to the project. If the City incurs additional cleanup costs, these costs shall be billed to the Applicant or contractor. Moreover, except as provided in RCW 19.122.030, any damage or destruction to existing public or private facilities done during the course of work shall be restored at the Applicant's or contractor's expense. This includes restoration of all traffic devices and pavement markings. The Public Works Director shall determine the extent of damage and order the scope and type of restoration.

19.3. Temporary Traffic Control

A. A traffic control plan shall be prepared for any activities within the right-of-way that disrupt traffic patterns for long periods.

B. A temporary traffic control (work zone) plan must be submitted and approved before beginning any work requiring traffic control for intermittent periods.

C. The Inspector shall approve field adjustments to traffic control to meet actual conditions.

D. The traffic control plan shall be consistent with the standards defined in the MUTCD. All of the following basic principles and standards must be observed by all those who perform work within a street right-of-way.

1. Work areas are safe and congestion is minimized; and
2. Motorized and non-motorized traffic is warned, controlled, and protected; and
3. Emergency access is maintained; and

4. All traffic is expedited through the work zone in a safe and timely manner.

E. The traffic control plan must allow for continued emergency services access to and through the work site. The plan shall contain adequate connections and clear signage for pedestrian and business disruption.

1. The traffic control plan shall show existing right-of-way conditions, such as accesses, channelization, lane widths, all traffic control devices, bicycle/pedestrian paths, bus stops, and pavement edge.

2. If steel plates are approved for use, the plates shall be non-skid, shimmed and pinned and cold mix asphalt ramps shall be added to provide suitable transition from the roadway to the top of the steel plates.

3. If the contractor work includes grooved pavement, abrupt lane edges, steel plates, or loose gravel, the roadway must be posted with signs stating the condition, as required by current law in RCW 47.36.200.

19.4. Staking

A. At a minimum, items that require staking include property corners, subgrade elevations, slope (grade) stakes, right-of-way location, drainage structures (with cut/fill to grate or lid) and other permanent structures including signal and light pole bases, junction boxes, utility vaults, controllers, etc.

B. In the right-of-way, all surveying and staking must be performed by an engineering or surveying firm capable of performing such work. The engineer or surveyor directing such work will be licensed by the State of Washington.

C. A pre-construction meeting must be held with the City prior to commencing staking. The minimum staking of streets will be as follows:

1. Stake centerline alignment every 25 feet (50 feet in tangent sections), points of vertical curvature (PVCs), points of vertical tangency (PVTs), high points and low points with cuts and/or fills to subgrade; and

2. Stake top of ballast and top of crushed surfacing at centerline and edge of pavement at the above described intervals; and

3. Stake top back of curb at a consistent offset for vertical and horizontal alignment at the above described intervals with cuts and/or fills to subgrade; and
4. Staking will be maintained by the applicant throughout construction period.

19.5. Trenches

A. General

1. The Public Works Director shall require trenchless methods such as boring or jacking) when it is demonstrated that trenching methods are not possible due to surface and subsurface conflicts or soil conditions, or b) when the utility is installed after reconstruction or overlay of the road.
2. Open trench sides shall be kept as nearly vertical as possible and follow WISHA safety requirements.
3. When ground water is anticipated or encountered during trenching, a dewatering plan must be provided for approval.

B. Backfill

1. All subgrade will be compacted to 95 percent maximum density as described in Section 2-03 of the latest version of the WSDOT Standard Specifications;
2. Crushed surfacing materials used for backfill will conform to Section 4-04 of the latest version of the WSDOT Standard Specifications;
3. Granular material will conform to Section 9-03.19 of the latest version of WSDOT Standard Specifications;
4. Native material may only be used if deemed acceptable by the City. Soils test are required to determine if the material is acceptable and to test for adequate compaction;
5. Controlled Density Fill (CDF) shall meet the requirements of 2-09.3 of the WSDOT Standard Specifications. CDF shall not be used within 10 feet of a steam line.

C. Temporary Trench Closure

1. Trenches that will receive traffic or that will be left open overnight before final restoration shall be covered by a temporary patch or by installation of steel plates. The temporary patch material can be hot mix, cold mix, or asphalt-treated base (ATB) dumped directly into the trench, bladed out, and compacted. The trench must be filled flush to the surrounding surfaces to provide a smooth riding surface.
2. Use of steel plates requires approval from the Inspector. If approved, follow section 28.4 of this chapter.
3. Steel plate(s) shall cover CDF for at least 48 hours prior to pavement placement.
4. Prior to predicted or possible snow events, the Inspector must be notified of all steel plate locations.

19.6. Traffic Signal Loops

A. Coordination of disruptions to signal loops during construction will occur at the project pre-construction meeting.

B. No splicing of traffic signal loops shall be permitted within the roadway.

19.7. Sidewalks

A. Where approved, temporary sidewalks shall be at least five feet wide, except temporary sidewalks installed during construction in accordance with Chapter 7.5, Frontage Improvements.

B. Permanent Sidewalks

1. During removal, panels shall be removed to the nearest complete and competent panel.
2. Installation:
   - i. See Standard Plan 3-09 Sidewalk,
   - ii. Install an 18-inch root barrier placed between trees and sidewalks/curbs/driveways;

iii. Use Class 4000 PCC four-inches thick with a non-slip broom finish, except driveway approaches, where the concrete shall be six-inches thick;

iv. The concrete shall be placed and finished per WSDOT Standard Specifications 8-14.3(3);

v. All concrete shall be free of postmarks, graffiti, footprints, and tire marks prior to acceptance;

vi. Concrete sidewalks shall be cured for at least 72 hours before it can be used. During curing time, sidewalk must be protected from pedestrian and vehicle traffic;

vii. An expansion joint consisting of 3/8-inch or 1/4-inch x 2-inch, full depth of pre-molded joint material shall be placed around fire hydrants, poles, posts, utility castings, and along walls or structures in paved areas;

viii. An expansion joint consisting of 3/8-inch or 1/4-inch x 2-inch of pre-molded full depth joint material shall be placed in curbs and sidewalks at of 10-foot intervals and at sides of drainage inlets. When curbs and/or sidewalks are placed by slip-forming, a pre-molded strip up to 1/2-inch thick and up to full depth shall be used;

ix. Expansion joints in sidewalks shall match the joints in the curb whether the sidewalk is adjacent to the curb or separated by an amenity zone;

x. Tool joints consisting of 1/4-inch V-grooves shall be made in the sidewalk at intervals equal to the width of the sidewalk;

xi. Interface between curb and adjacent sidewalks on integral pour construction shall be formed with 1/4-inch radius edging tool. On separate pour construction an expansion joint consisting of 3/8-inch or 1/4-inch x 2-inch full depth premolded joint material shall be placed between the curb (or thickened asphalt edge) and the adjacent sidewalk.

19.8. Landscaping

A. Soil

1. All disturbed soils that do not have structures on them shall be remediated according to BMP T5.13 Post Construction Soil Quality and Depth (Stormwater Manual); except
2. Soils for improvements, such as bio filtration and raingardens, shall meet specified material and installation requirements.

B. Trees

1. Installation of trees shall follow all notes shown in Figure 19.2 – Tree Installation – Right-of-Way.

~~1.~~2. Root barrier shall be required for all landscaping within amenity strips (aka landscape strips) within or adjacent to public roadway or drainage facilities.

Figure 19.2 Tree Installation – Right-of-way

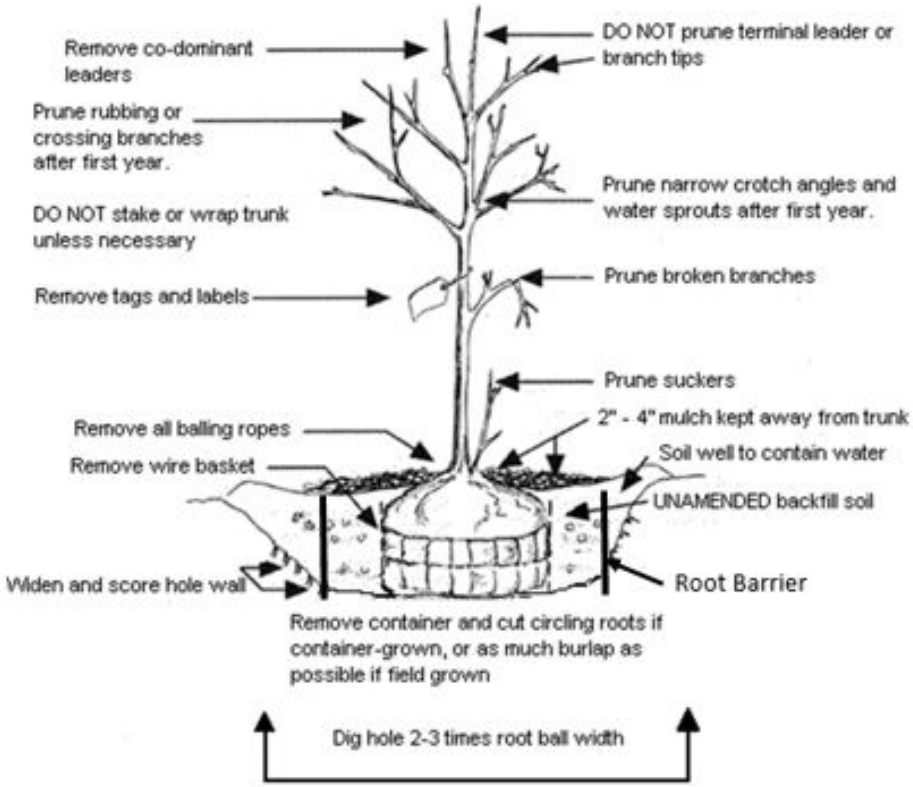

19.9. Grading

A. Amenity zone: The final grade of soil surfaces in planting strips must accommodate runoff from sidewalk surfaces cross-sloped to drain toward the street.

B. Tree pits and location

1. Tree wells shall be graded to provide a soil surface two inches below the adjacent sidewalk and curb elevation, and shall then be top-dressed with bark or wood chips to surrounding grade.

19.10. Curb, Gutter, Access Approach

A. Type A vertical curb and gutter shall be used on all street classifications. Refer to Standard Plan 03-12 Curbs.

B. All curb and gutter shall be constructed with Class 4000 PCC furnished and placed in accordance with WSDOT Standard Specifications, Sections 6-02, 8-04, and 8-14. Cold weather precautions as set forth in WSDOT Standard Specifications Sections 5-05.3(14) and 6-02.3(6) shall apply.

C. All curb removals shall be to the nearest joint.

D. Subgrade compaction for curbs, gutters, and sidewalks shall meet a minimum 95 percent of maximum density ASTM D1557.

E. Extruded curb is not allowed in the public right-of-way, unless it is temporary and approved by the Public Works Director.

1. When temporarily allowed, extruded cement concrete curb shall be anchored to existing pavement by either steel tie bars or adhesive in conformance with WSDOT Standard Specification Section 8-04.
2. When temporarily allowed, extruded asphalt curb shall be anchored by means of a tack coat of asphalt in accordance with WSDOT Standard Specification Section 8-04.
3. A concrete access approach must have a construction joint at the right-of-way line.

19.11. Pavement Restoration

A. General: Anyone cutting into and removing an area of the roadway surface in the right-of-way is responsible for permanent pavement restoration.

1. Temporary cold mix patches must be installed within 3 days.
2. Final pavement restoration must be completed within 30 days of trench closure.
3. Concrete Pavement
   i. Concrete roadways shall be restored to the nearest full panel.

ii. Concrete shall be replaced or patched with concrete per Section 5-05 and Section 6-02.3(2) B.

iii. Any concrete pavement traffic lane affected by the trenching shall have all affected panels replaced.

iv. Concrete pavement shall be connected to existing concrete pavement with dowels and epoxy and restored with a WSDOT approved mix.

v. Concrete pavement shall be restored consistent with WSDOT Standard Plan A-60.10-02.

B. Asphalt Pavement

1. Refer to Standard Plan for Trench-Pavement Restoration.
2. Asphalt pavement removal shall be by full depth saw cut or drum grinder.
3. Asphalt pavement cut widths, based on the final trench width, however, the Inspector shall extend cut limits to competent roadway pavement.
4. The Inspector shall approve the restoration limits before restoration begins.

Table 19.1 Pavement Cut Dimensions

TRENCH DEPTH (FT)	MINIMUM CUT BEYOND TRENCH (FT) ALL FOUR SIDES
Up to 4	1.0
More than 4 up to 6	1.5
More than 6 up to 8	2.0
10	2.5
12	3.0
14	3.5
16	4.0
18	4.5
20	5.0

Resource: Utility Cuts in Paved Roads, FHWA-SA-97-049

5. Cuts in asphalt must be wide enough to accommodate compaction equipment.
6. Cuts shall be expanded to include joints, panel edges, existing patches, or cracks within four feet of the opening.
7. Cuts shall be expanded to ensure that new longitudinal joints are not located in a wheel path.
8. The cut face shall be neat, straight, and vertical. The corners shall be square.
9. When an existing asphalt paved street is to be widened, the edge of pavement shall be saw-cut to provide a clean, vertical edge for joining to the new asphalt at the time of the placement of the new asphalt. After placement of the new asphalt section, the joint shall be sealed.
10. When a pavement cut extends beyond half the travel lane's width, the pavement repair shall be extended to include the full width of the travel lane.

C. Overlay

1. A public street shall be overlaid as indicated when any of the following conditions exist:

i. Utility installation parallel to the pavement centerline requires half-street overlay from the centerline to the curb line for the entire length of the utility extension. If the utility trenching encroaches on both sides of the centerline, a full width street overlay will be required;

ii. Utility installation consisting of three or more perpendicular (transverse) trenches within 150 feet, measured along the pavement centerline, requires overlay from the curb line to the centerline for the full length plus 5 feet on each end. If a trench extends beyond the centerline, a full width street overlay will be required;

iii. Utility installation at an angle to the pavement centerline: requires an overlay from the centerline to the curb line for the entire length plus 5 feet on each end of the utility installation. If the utility trenching encroaches on both sides of the centerline, a full width street overlay will be required;

iv. Road cuts are made in a moratorium overlay street that has been resurfaced or constructed within the last 5-years

v. Plane existing road at ends of the overlay perpendicular to the roadway for at least 40 feet for arterials and 15 feet for non-arterial roadways to provide a flush transition. For half-street or full-street overlays, planing (grinding) of the entire paving area is required (centerline to gutter or gutter to gutter). All asphalt joints and tapered transitions shall be sealed with AR4000 or equivalent.

D. Testing

1. Prior to placing any asphalt surface materials on the roadway, the Inspector shall review and approve density test reports, certified by a professional engineer, for the crushed surfacing base course and the crushed surfacing top course.

2. Testing shall be performed by a certified independent testing laboratory. The cost of testing is the responsibility of the franchise utility or contractor. The testing and approval by the Inspector does relieve the contractor from any liability for the trench restoration.

3. Material testing shall be required for trench backfill (native or imported), asphalt, and concrete.
4. All densities shall be determined by testing specified in WSDOT Standard Specifications.
5. Compaction of all lifts of asphalt shall be 91 percent of maximum density as determined by WSDOT Standard Specifications.
6. Testing of CDF shall be in accordance with WSDOT Standard Specifications.
7. The compaction tests in back filled trenches shall be performed in maximum increments of two feet. The number of tests required shall be determined per square feet of compaction area as follows:
    - i. One test for less than 50 square feet;
    - ii. Two tests for 50 to 100 square feet;
    - iii. Three tests for 100-plus to 300 square feet;
    - iv. One test for every 200 square feet over 300 square feet or every 100 lineal feet of crushed rock.
    - v. Proof rolling shall be required by the inspector prior to asphalt installation.

Chapter 20. Inspection

The City's inspectors inspect work performed under an approved permit. Public Works right-of-way inspectors provide inspection services for permitted right-of-way development, site development and franchise permits in the right-of-way.

A. Inspections for the City's capital improvement projects (CIP) are governed by the CIP contract and are not addressed in this manual.

B. The following pertains to inspections by Public Works ROW Inspectors.

20.1. Authority and Duties of Inspectors

A. The Inspector functions as a resource for Permittees and contractors. At a minimum the Inspector:

1. Conducts field investigations;
2. Interprets and applies standards;
3. Troubleshoots and assists with field changes;
4. Monitors compliance with permit conditions;
5. Monitors utilities protection;
6. Monitors traffic control and pedestrian access;
7. Monitors excavation, shoring, backfill and restoration, and public safety;
8. Reviews the Stormwater Pollution Prevention Plan during construction;
9. Reviews as-constructed drawings (record drawings).

B. The Inspector has the authority to reject defective material and suspend work that is being done improperly. The Inspector may advise the Applicant or contractor of any faulty work or materials; however, failure of the Inspector to advise the Applicant or contractor does not constitute acceptance or approval. The Inspector has the authority to require revisions to approved engineering plans when necessary due to conflicting field conditions.

C. The Inspector is not authorized to revise, alter, or relax the provisions of these standards. Such changes must be approved by the Public Works Director through the deviation process outlined in Appendix H of these standards.

20.2. Requirements

A. At all times during construction, the Applicant/contractor must have the issued permits and approved plans and specifications on the job site.

B. All construction or work for which a permit is required shall be subject to inspection by the City. The City may inspect any project at any stage of the work to determine that adequate control is being exercised.

C. Approval as a result of an inspection shall not be construed to be an approval of a violation of approved standards or City ordinances.

D. It shall be the duty of the Applicant to cause the work to remain accessible and exposed for inspection purposes. Failure to notify the City of readiness for inspection in a timely manner will result in the requirement to remove and/or replace buried or hidden elements. The City shall not be liable for the expense entailed in the removal or replacement of any material required to allow an inspection to occur.

E. Site and right-of-way inspections may include the items listed below. Specific inspections are determined at the pre-construction meeting:

1. Survey monuments;
2. Survey stakes;
3. Construction staking prior to construction, including contour lines of boundaries and depth of all existing floodplains, wetlands, channels, swales, streams, storm drainage systems, roads (low spots), bogs, depressions, springs, seeps, swales, ditches, pipes, groundwater, and seasonal standing water; property corners, subgrade elevations, slope (grade) stakes, right-of-way location; field verification of existing and proposed grading contours; work limits and clearing limits; and foundation form elevations (before concrete is poured);
4. Stormwater Pollution Prevention Plan installation and maintenance;

i. Including prompt street sweeping and prevention of tracked dirt on adjacent streets;

ii. Native vegetation protection and critical area buffers;

iii. Locations of proposed infiltration facility areas to be protected;

iv. Staging and stockpile areas;

v. Construction traffic routing, traffic control, signage and channelization;

vi. Surface water facilities – materials and installation;

vii. Retaining walls;

viii. Utility installation depth and location;

ix. Pavement cuts;

x. Trench backfill/compaction;

xi. Roadway centerline elevations;

xii. Elevations at curb radii, PVC's, PVI's, and PVT's;

xiii. Right-of-way pavement restoration;

xiv. Landscaping installation and restoration plants, root barriers, and irrigation;

xv. Clean-up;

xvi. Record drawing with as-constructed information;

xvii. Punch list.

Page intentionally left blank.

APPENDIX A - ACRONYMS AND DEFINITIONS

These acronyms and definitions are for use with this Engineering Development Manual. Unless specifically defined below, words or phrases used in this manual shall be interpreted to give them the meaning they have in common usage and to give this manual its most reasonable application.

Page intentionally left blank.

Acronyms

AASHTO	American Association of State Highway and Transportation Officials
ADA	Americans with Disabilities Act
ADT	Average Daily Traffic
APWA	American Public Works Association
ASTM	American Standards for Testing Materials
ATB	Asphalt treated base
BMP	Best Management Practices
C	Long Chord Length (straight line between PC and PT) – horizontal curve
CDF	Controlled Density Fill
CFR	Code of Federal Regulations
CSTC	Crushed Surfacing Top Course
CWA	Clean Water Act
DCD	City of Sammamish Department of Community Development
DNR	Department of Natural Resources
e	Rate of Super elevation – horizontal curve
FEMA	Federal Emergency Management Agency
FHWA	Federal Highway Association
HMA	Hot Mix Asphalt
HPA	Hydraulic Project Approval

ITE	Institute of Transportation Engineers
JARPA	Joint Aquatic Resource Permit Application
KCSWDM	King County Surface Water Design Manual
L	Curve Length – horizontal curve
MUTCD	Manual on Uniform Traffic Control Devices, current edition
NAD	North American Datum, horizontal, of 1983/1991
NAVD	North American Vertical Datum
NGVD	National Geodetic Vertical Datum of 1929
NPDES	National Pollutant Discharge Elimination System
NTU	Nephelometric Turbidity Units
PC	Point of Curvature (point at which the curve begins) – horizontal curve
PCC	Portland Cement Concrete
PI	Point of Intersection (point at which the two tangents intersect) – horizontal curve
PIT	Pilot Infiltration Test
PROWAG	Public Right of Way Accessibility Guidelines
PSE	Puget Sound Energy
PT	Point of Tangent (point at which the curve ends) – horizontal curve
PVI	Point of vertical interception (intersection of initial and final grades) – vertical curve
PW	Public Works
PWS	Public Works Standards

R	Radius – horizontal curve
SMC	City of Sammamish Municipal Code
SWPE	Solid Wall Polyethylene
SWPPP	Stormwater Pollution Prevention Plan
T	Tangent Length – horizontal curve
TESC	Temporary erosion and sediment control
TIR	Technical Information Report
TIP	Transportation Improvement Plan
TSS	Total Suspended Solids
WAC	Washington Administrative Code
WISHA	Washington Industrial Safety and Health Administration
WSDOT	Washington State Department of Transportation

Definitions

Access. The safe, adequate, and usable ingress/egress (entrance/exit) between private property and the public street system. Usually defined at the right-of-way/property line.

Adverse Effect or. Effect that is a direct or indirect result of a proposed action, or its interrelated or interdependent actions, and the effect is not discountable, insignificant, or beneficial. In the event that the overall effect of the proposed action is beneficial, but is also likely to cause some adverse effects, then the proposed action is considered to result in an adverse effect.

Alley. A service roadway, not designed for general travel, providing a means of automobile, service vehicle, or emergency vehicle access to abutting property and not intended for primary traffic or pedestrian circulation.

Alignment. The route of the road or other facility, defined as a series of horizontal tangents and curves.

Amenity Zone. That area, adjacent to the curb or paved roadway and within the right-of-way, which is commonly landscaped, but may include other features for the City's benefit such as utilities, traffic signs, mailboxes, rain gardens, etc.

Annual Average Daily Traffic. Daily traffic that is averaged over one calendar year.

Average Daily Traffic (ADT). The average number of vehicles passing a specified point during a 24-hour period.

Average Weekly Traffic (AWT). The average number of vehicles passing a specified point turn a 7-day period.

Applicant. Any person, governmental agency, or other entity that executes the necessary forms to procure official approval of a project or a permit to carry out construction of a project within the City ROW. This could be the property owner, contractor, developer or permittee.

As-Constructed. Actual surveyed locations of constructed elements. As-constructed (or as-built) information is included on Record Drawings.

Auxiliary Lane. The portion of the roadway adjoining the traveled way for parking, turning, or other purposes supplementary to through-traffic movement.

Best Management Practices. When used with reference to stormwater it is defined as: Schedules of activities, restrictions, maintenance procedures, and structural and/or managerial practices, that when used singly or in combination, prevent or reduce the release of pollutants and other adverse impacts to Waters of the State.

Bicycle Facilities. A general term denoting improvements and provisions to accommodate or encourage bicycling, including parking and storage facilities, and shared roadways specifically designated for bicycle use. AASHTO

Bicycle Lane or Bike Lane. A portion of a roadway which has been designated by pavement markings and, if used, signs, for the preferential or exclusive use of bicyclists. AASHTO

Bicycle Path or Bike Path. A pathway that is exclusively used by bicyclists, where a separate, parallel path is provided for pedestrians and other wheeled users. Most pathways are shared between bicyclists and other users: see Shared Use Path. AASHTO

Bikeway. A generic term for any road, street, path or way which in some manner is specifically designated for bicycle travel, regardless of whether such facilities are designated for the exclusive use of bicycles or are to be shared with other transportation modes. AASHTO

Building. Any structure used or intended for supporting or sheltering any use or occupancy.

Bulb. Area for vehicle turnaround typically located at the end of a cul-de-sac street.

City. The City of Sammamish.

City Engineer. The City of Sammamish City Engineer or designee.

Clear sight triangle. An area of unobstructed vision at street intersections or street and driveway intersections defined by lines of sight between points at a given distance from the intersection of street and/or driveway lines.

Clearance. The minimum distance between elements in, under and above the street right-of-way.

Clearing. The cutting, moving or removal of vegetation from a site by physical, mechanical, chemical, or other means which exposes the earth's surface or any actions which disturb the existing ground surface. This does not mean landscape maintenance or pruning consistent with accepted horticultural practices. Clearing is an activity, which does not require reforestation per an approved Forest Practices Application/Notification issued under the Forest Practices Act.

Commercial Driveway. A driveway which is used to provide access to business and non-single family residential enterprises, including but not limited to sales, service, industry, churches or other quasi-public buildings

Comprehensive Plan. The latest edition of the plan and amendments as described in SMC Chapter 24.

Conveyance System. Natural and man-made drainage features that collect, contain, and convey surface water. Natural drainage features include swales, streams, rivers, lakes, and wetlands. Man-made features include swales, gutters, ditches, pipes, and detention/retention facilities.

Critical Areas. Critical areas as defined in SMC Chapter 21A.

Cross Section. Vertical section of a roadway showing the position and number of vehicle and bicycle lanes and sidewalks, along with their cross slope or banking. Cross sections also show drainage features, utilities, pavement structure, and other items outside the category of geometric design.

Cul-de-Sac. The circular turnaround at the terminus of a street end.

Crosswalk. The portion of the roadway between the intersection area and a prolongation or connection of the farthest sidewalk line or in the event there are no sidewalks then between the intersection area and a line 10 feet there from, except as modified by a marked crosswalk. See RCW 46.04.160

Dead End. Street End. A road or street without an exit.

Declaration of Covenant. A legal document between the City and persons holding title to the property requiring the titleholder to perform required maintenance and repairs on drainage facilities necessary to meet the City's specified standards within a reasonable time limit.

Design Speed. A selected speed used to determine the various geometric features of the roadway.

Developer. The person or entity that owns or holds purchase options or other development control over property for which development activity is proposed.

Development (Land Use). The division of a parcel of land into two or more parcels; the construction, reconstruction, conversion, structural alteration, relocation, or enlargement of any structure; any mining, dredging, drilling, paving, clearing, or grading; changes to surface or ground waters; or any use, change of use, or extension of the use of land. See SMC Chapter 19.

Development (Flood). Any man-made change to improved or unimproved real estate in the Regulatory Floodplain, including but not limited to buildings or other structures, mining, dredging, filling, grading, paving, excavation or drilling operations, storage of equipment or materials, subdivision of land, removal of more than five percent of the native vegetation on the property, or alteration of natural site characteristics. For definition related to surface water, refer to the Stormwater Manual.

Development Project. Any project submitted to the City for permitting and construction within the City of Sammamish City limits.

Development Review Engineer. Public Works Department Engineer that is responsible for the review of a development.

Deviation. Written permission from the City to depart from the requirements of the Public Works Standards.

Director. The Public Works Director or designee, except that when referring to enforcement of permitting and review processes defined in SMC Chapter 21A Director shall mean the Director of Community Development or designee.

Discharge. To throw, drain, release, dump, spill, empty, emit, or pour forth any matter or to cause or allow matter to flow, run or seep from land or be thrown, drained, released, dumped, spilled, emptied, emitted or poured into water.

Drainage. Collection, conveyance, containment, and/or discharge of surface water and stormwater runoff.

Driveway. The ~~on-site portion of an~~direct access between~~to~~ a property and public right-of-way or access tract.. Driveway is privately owned and maintained.

Driveway Approach. That area of an access to a property lying between the pavement edge of the intersecting street and the right-of-way/property line.

Driveway Apron. See Driveway Approach.

Easement. A grant by a property owner of an interest and/or the use of a strip of land by the public, an entity, or person for specific purposes.

Emergency Vehicle Access. An all-weather drivable surface that is constructed and maintained for emergency vehicle access.

Emerging Technologies. Stormwater Treatment technologies that have not been evaluated with Department of Ecology approved protocols, but for which preliminary data indicate they may provide a necessary function(s) in a stormwater treatment system

Engineer Geotechnical. A practicing, professional civil engineer licensed by the State of Washington, who has at least four years of professional employment as a geotechnical engineer.

Engineer – Professional. An engineer, licensed to practice in the State of Washington as a Professional Engineer.

Engineer – Soils. See Engineer – Geotechnical.

Engineering – Geotechnical. The application of soil mechanics in the investigation, evaluation, and design of civil works involving the use of earth materials and the inspection or testing of the construction thereof.

Engineering – Geologist. A geologist certified by the State as experienced and knowledgeable in engineering geology.

Engineering – Geology. The application of geologic knowledge in the investigation and evaluation of naturally occurring rock and soil for use in the design of civil works.

Eyebrow. A partial bulb located adjacent to the serving road that provides access to lots and serves as a vehicle turnaround.

Financial Guarantee. A surety, bond, cash deposit, escrow account, assignment of funds, irrevocable letter of credit, or other means acceptable to the City to guarantee acceptable performance, execution, completion of the work and maintenance, in accordance with the project's approved plans and in accordance with all applicable governmental requirements.

Fire Apparatus Access Road. As defined in the International Fire Code.

Fire Lane. As defined in the International Fire Code.

Fixed Object. An object having properties greater than a four-inch by four-inch wooden post.

Frontage. Any lot line abutting street right-of-way.

Frontage Improvements. Motorized and non-motorized facilities, transit facilities, utilities, landscaping, and other such features located within the public right-of-way.

Grading. See Land Disturbing Activity.

Ground Disturbance. See Land Disturbing Activity.

Grubbing. The removal and disposing of all unwanted vegetative matter from underground, such as sod, stumps, roots, buried logs and other debris.

Half-Street. A street constructed utilizing at least half the regular width of the right-of-way and permitted as an interim facility pending construction of the other half.

Hard Surface. An impervious surface, a permeable pavement, or a vegetated roof.

Impervious Surface. A hard surface area, which either prevents or retards the entry of water into the soil mantle as under natural conditions prior to development. A non-vegetated area, which causes water to run off the surface in greater quantities or at an increased rate of flow from that present under natural conditions prior to development. Common impervious surfaces include, but are not limited to, roof tops, walkways, patios, driveways, parking lots or storage areas, concrete or asphalt paving, gravel roads, packed earthen materials, and oiled macadam or other surfaces which similarly impede the natural infiltration of stormwater. Open, uncovered retention/detention facilities shall not be considered as impervious surfaces for the purposes of determining whether the thresholds for application of minimum requirements are exceeded. Open, uncovered retention/detention facilities shall be considered impervious surfaces for purposes of runoff modeling.

Improvements. Any improvement to public, real, or personal property, including but not limited to, installation of streets, roads, pedestrian/bike facilities, streetlights, landscape features, sewer and waterlines, bridge structures, storm drainage facilities, and traffic control devices.

Infiltration. The downward movement of water from the surface to the subsoil.

Inspector. Designee of the Public Works Director or City Engineer.

Internal Street. A road that is contained within the development.

Intersection. The area from the intersection of a roadway to the radius tangent point or stop bar on each approach, whichever is greater.

Land Disturbing Activity. Any activity that results in movement of earth, or a change in the existing soil cover (both vegetative and non-vegetative) and/or the existing soil topography. Land disturbing activities include, but are not limited to clearing, grading, grubbing, filling, and excavation. Compaction that is associated with stabilization of structures and road construction shall also be considered a land disturbing activity. Vegetation maintenance is not considered land disturbing activity. Stormwater facility maintenance is not considered a land-disturbing activity if conducted according to established standards and procedures.

Land Surveying. Establishment of corners, lines, boundaries, and monuments, the laying out and subdivision of land, the defining and locating of corners, lines, boundaries and monuments

of land after they have been established, the survey of land areas for the purpose of determining the topography thereof, the making of topographical delineations and the preparing of maps and accurate records thereof, when the proper performance of such services requires technical knowledge and skill.

Landing. A road or driveway approach area to any public or private road or intersection.

Loop. Road of limited length forming a loop, having no other intersecting road, and functioning mainly as direct access to abutting properties. A loop may be designated for one-way or two-way traffic.

LID Best Management Practices. Distributed stormwater management practices, integrated into a project design, that emphasize pre-disturbance hydrologic processes of infiltration, filtration, storage, evaporation, and transpiration. LID BMPs include, but are not limited to, bio retention/rain gardens, permeable pavements, roof downspout controls, dispersion, soil quality and depth, minimal excavation foundations, vegetated roofs, and water re-use.

Low Impact Development (LID). A stormwater and land use management strategy that strives to mimic pre-disturbance hydrologic processes of infiltration, filtration, storage, evaporation and transpiration by emphasizing conservation, use of on-site natural features, site planning, and distributed stormwater management practices that are integrated into a project design.

Low Impact Development (LID) Principles. Land use management strategies that emphasize conservation, use of on-site natural features, and site planning to minimize impervious surfaces, native vegetation loss, and stormwater runoff.

Maintenance. Repair and maintenance includes activities conducted on currently serviceable structures, facilities, and equipment that involves no expansion or use beyond that previously existing and results in no significant adverse hydrologic impact. It includes those usual activities taken to prevent a decline, lapse, or cessation in the use of structures and systems. Those usual activities may include replacement of dysfunctional facilities, including cases where environmental permits require replacing an existing structure with a different type structure, as long as the functioning characteristics of the original structure are not changed. One example is the replacement of a collapsed, fish blocking, round culvert with a new box culvert under the same span, or width, of roadway. Concerning stormwater facilities, maintenance includes

assessment to ensure ongoing proper operation, removal of built up pollutants (i.e. sediments), replacement of failed or failing treatment media, and other actions taken to correct defects as identified in the maintenance standards of the latest version of the City of Sammamish Stormwater Drainage Manual.

Municipal Separate Stormwater System (MS4). A conveyance, or system of conveyances (including roads with drainage systems, municipal streets, catch basins, curbs, gutters, ditches, manmade channels, or storm drains), owned or operated by the state, City, county, or special purpose district having jurisdiction over disposal of wastes, stormwater, or other wastes, or a designated and approved management agency under section 208 of the CWA that discharges to waters of the United States; designed or used for collecting or conveying stormwater; which is not a combined sewer; and which is not part of a Publicly Owned Treatment Works (POTW) as defined at 40 CFR 122.2.

National Pollutant Discharge Elimination System (NPDES). The national program for issuing, modifying, revoking, and reissuing, terminating, monitoring and enforcing permits, and imposing and enforcing pretreatment requirements, under sections 307, 402, 318, and 405 of the Federal Clean Water Act, for the discharge of pollutants to surface waters of the state from point sources. These permits are referred to as NPDES permits and, in Washington State, are administered by the Washington Department of Ecology.

Native Vegetation. Vegetation comprised of plant species, other than noxious weeds, that are indigenous to the coastal region of the Pacific Northwest and which reasonably could have been expected to naturally occur on the site. Examples include trees such as Douglas Fir, western hemlock, western red cedar, alder, big-leaf maple, and vine maple; shrubs such as willow, elderberry, salmonberry, and salal; and herbaceous plants such as sword fern, foam flower, and fireweed.

Nephelometric Turbidity Units (NTU). These units are a quantitative measure of water clarity based on the scattering of a standard beam of light directed into a standard sample of the water when the scattering is measured at right angle to the beam. A higher reading means the sample is cloudier. See also the definition for “turbidity” included below.

Off-Street Parking Space. An area accessible to vehicles, exclusive of right-of-way, that is improved, maintained, and used for the purpose of parking a motor vehicle.

Operation and Maintenance Plan. A set of instructions and schedules to keep drainage facilities working to meet the design performance criteria.

Pavement Width. Paved area on shoulder-type roads or paved surface between curb, thickened edge, or gutter flow line on all other roads.

Peak Hour of Generator. A development that generated additional traffic on the roadways as determined through a Traffic Analysis and standards adopted by ITE.

Performance Guarantee. See Financial Guarantee.

Permeable Pavement. Pervious concrete, porous asphalt, permeable pavers, or other forms of pervious or porous paving material intended to allow passage of water through the pavement section. It often includes an aggregate base that provides structural support and acts as a stormwater reservoir.

Pervious Surface. Any surface material that allows stormwater to infiltrate into the ground. Examples include lawn, landscape, pasture, native vegetation areas, and permeable pavements.

Pipe Stem. A strip of land having a width narrower than that of the lot or parcel to be served and is designed for providing access to that lot or parcel.

Plans. The plans, profiles, cross sections, elevations, details, and supplementary specifications showing the location, character, dimensions, and details of the work to be performed.

Pollution. Contamination or other alteration of the physical, chemical, or biological properties of waters of the state that will or is likely to create a nuisance or render waters harmful, detrimental, or injurious 1) to public health, safety, or welfare, or 2) to domestic, commercial, industrial, agricultural, recreational, or other legitimate beneficial uses, or 3) to livestock, wild animals, birds, fish, or other aquatic life. Contamination includes discharge of any liquid, gas, or solid, radioactive, or other substance. Alteration includes temperature, taste, color, turbidity, or odor.

Project Manager. City of Sammamish DCD staff member responsible for review of a development project.

Project. Activity encompassing all phases of the work to be performed and is synonymous with the term “improvement”, “work”, “development” or “redevelopment.” A project may entail work on one or more parcels of land.

Project Site. That portion of a property, properties, or right-of-ways subject to land disturbing activities, new hard surfaces, or replaced hard surfaces. See Hard Surface above.

Profile. When referring to roadway design: Vertical aspect of the road, including crest and sag curves, and the straight grades connecting them.

Public Works Director. The City of Sammamish Public Works Director or designee.

Rainy Season. The period starting on October 1 of each year and ending April 30 of the following year. These dates may be adjusted by the Public Works Director based on climatic conditions for a particular year.

Record Drawings. Drawings that document as-constructed (or as-built) conditions of a permitted development or redevelopment project. See As-Constructed definition above.

Redevelopment. For surface water purposes: on a site that is already substantially developed (i.e., has 35 percent or more of existing impervious surface coverage), the creation or addition of impervious surfaces; the expansion of a building footprint or addition or replacement of a structure; structural development including construction, installation or expansion of a building or other structure; replacement of impervious surface that is not part of a routine maintenance activity; and land disturbing activities.

Replaced hard surface. For structures, the removal, and replacement of hard surfaces down to the foundation. For other hard surfaces, the removal down to bare soil or base course and replacement.

Replaced Impervious Surface. For structures, the removal, and replacement of impervious surfaces down to the foundation. For other impervious surfaces, the removal down to bare soil or base course and replacement.

Right-of-Way. Property granted or reserved for, or dedicated to, public use for street purposes and utilities, together with property granted or reserved for, or dedicated to, public use for walkways, sidewalks, bikeways, horse trails, and parking whether improved or unimproved, including the air rights, sub-surface rights and easements thereto.

Road. Interchangeable with “Street,” “Roadway,” or “Street Way.”

Runoff. Water that travels across the land surface and discharges to water bodies either directly or through a collection and conveyance system. See also “Stormwater.”

Sediment/Erosion-Sensitive Feature. An area subject to significant degradation due to the effect of construction runoff, or areas requiring special protection to prevent erosion. See the latest edition of the City of Sammamish Stormwater Manual.

Shoulder. The paved or unpaved portion of the roadway outside the traveled way.

Sidewalk. All hard-surface walkways within public rights-of-way or a public easement in the area between the street margin and the roadway.

Sight Distance. The distance along a roadway throughout which an object of specified height is continually visible. This distance depends on the height of the driver’s eye above the road surface, the height of the specified object above the road surface, and the height and lateral positions of obstructions within the driver’s line of sight. See AASHTO: A Policy on Geometric Design

Sight Distance – Stopping. The distance needed a driver to perceive and react to a discernible hazard and then brake to a stop before reaching the hazard. (Urban Street Geometric Design Handbook, ITE)

Sight Distance – Intersection. The distance needed to safely make a right turn or a left turn from an access or to a cross street, or for a driver to safely make a left turn from a street to an access. (Urban Street Geometric Design Handbook, ITE)

Sight Distance – Decision. The distance needed for a driver to ascertain and safely respond to an unexpected difficult or unfamiliar situation. Regarding access location, sight distance should

give familiar and unfamiliar drivers enough distance to safely turn into the desired access. (Transportation Research Board, 2003. Urban Street Geometric Design Handbook, ITE)

Site. Any tract, lot, or parcel of land, or combination of tracts, lots, or parcels of land which are in one ownership, or are contiguous and in diverse ownership, where development is to be performed as a part of a unit, subdivision, or project.

Site Plan. The development plan for one or more lots on which is shown the existing and proposed conditions of the lot, topography, vegetation, drainage, flood plains, walkways; means of ingress and egress; circulation; utility services; structures and buildings; signs and lighting; berms, buffers, and screening devices; surrounding development; or any other information that reasonably may be required in order that an informed decision can be made by the reviewing authority.

Special Drainage Areas. An area which has been formally determined by the City to require more restrictive regulation than City-wide standards afford in order to mitigate severe flooding, drainage, erosion or sedimentation problems which result from the cumulative impacts of development.

Stabilization. The prevention of soil movement by any various vegetative and/or structural means.

Storm Drainage Plan. A set of drawings and documents submitted as a prerequisite to obtaining a development permit. The plan contains all of the information and specifications pertaining to surface water management both on-site and offsite.

Stormwater. Water runoff during and following precipitation and snowmelt events, including surface runoff, drainage, or interflow.

Stormwater Manual. The most recent version of the City of Sammamish Stormwater Design Manual.

Street. A public or recorded private thoroughfare providing pedestrian and/vehicular access through neighborhoods and communities and to abutting property.

Surface Water. Water originating from rainfall and other precipitation that is found on ground surfaces and in drainage facilities, creeks, rivers, streams, springs, seeps, ponds, lakes, wetlands, as well as shallow ground water.

Surveyor. A person licensed by the State of Washington to engage in the practice of land surveying, as defined by RCW 18.43.020.

Traveled Way. The part of the road made for vehicle travel excluding shoulders and auxiliary lanes.

Turbidity. The visual cloudiness of runoff especially as caused by suspended solids and settle able solids that are being carried by the runoff.

Utility. Private or municipal corporations owning or operating, or proposing to own or operate facilities that comprise a system or systems for public service. Private utilities include gas, oil, electric, telecommunications, cable, storm drainage, sewer, or water companies that are subject to the jurisdiction of the State Utilities and Transportation Commission and that have not been classified as competitive by the commission.

Waters of the State. Those waters as defined as "waters of the United States" in 40 CFR Subpart 122.2 within the geographic boundaries of Washington State and "waters of the state" as defined in chapter 90.48 RCW which includes lakes, rivers, ponds, streams, inland waters, underground waters, salt waters and all other surface waters and water courses within the jurisdiction of the State of Washington.

Woonerf: A private roadway that gives equal priority to all modes of transportation such as pedestrians, bicycles, and vehicles. The roadway includes design for shared spaces, traffic calming, and low speeds.

Page intentionally left blank.

APPENDIX B - SURVEY CRITERIA

Page intentionally left blank.

Survey Format and Content

The following applies to surveys submitted to Public Works for development under review and use for city projects. Contact Community Development for survey requirements for land use as stated in the SMC. A survey acceptable to the City Public Works Department must contain the elements listed below. Review of the survey will be done as part of the plan review process.

1. The surveyor's stamp, signature, contact information and the date signed (see Note 1).
2. North arrow, graphic scale, legend, and vicinity map
3. Legal Description, if needed (see Note 2)
4. Both NAVD 88 and NAD83/91 are required (see Note 3)
5. Monuments within the project area (see Note 4)
6. Site benchmarks (see Note 5)
7. Rights-of-way with dimensions, source references, and methods used to determine (see Note 6)
8. Easements with type, dimensions, and source references (see Note 7)
9. Property lines with bearings and distances (see Note 8)
10. Buildings (see Note 9)
11. Streets and street improvements (see Note 11)
12. Utilities (see Note 11)
13. Contours (see Note 12)
14. Steep slopes (See Note 13)
15. Topography (see Note 14)
16. Significant Trees (see Note 15)

17. Water features (see Note 16)

18. Protected areas, including wetland boundaries (see Note 17)

19. Setbacks (see Note 18)

20. Underground hazards (see Note 19)

21. Any monuments in the project area that may be disturbed, destroyed, or removed shall be noted on the plans as requiring replacement. An application for a permit to remove or destroy a survey monument must be filed with the Washington State Department of Natural Resources, pursuant to RCW 58.24.040(8). Under such conditions, add Note 21 to General Notes on plan (see Note 20).

Survey Requirements Notes

Note 1. **Land Surveyor's Stamp** – Work consisting of the Practice of Land Surveying shall be done by or under the direction of a Surveyor licensed to practice in the State of Washington (RCW 18.43.010), and shall conform to all RCWs and WACs pertaining to surveying and engineering. Plans, specifications, plats, and reports prepared by the Surveyor shall be signed, dated, and stamped with the Surveyors' seal. (RCW 18.43.070) Washington State law defines the "practice of land surveying" as "assuming responsible charge of the surveying of land for the establishment of corners, lines, boundaries, and monuments, the laying out and subdivision of land, the defining and locating of corners, lines, boundaries and monuments of land after they have been established, the survey of land areas for the purpose of determining the topography thereof, the making of topographical delineations and the preparing of maps and accurate records thereof, when the proper performance of such services requires technical knowledge and skill." (RCW 18.43.020(9))

Note 2. **Legal Description** – Legal Descriptions are needed for plats, short plats, easements containing City utilities, pathways, walkways, sidewalks etc. Include the plat name or short plat number, block number if any, and lot number or parcel letter, or the metes and bounds description of the parcel.

Note 3. **Datum** – The Washington State Lambert Grid Coordinate System North Zone, using the NAD83 (1991) datum as established in accordance with Chapter 58.20 Revised

Code of Washington. The unit of measurement shall be the U.S. Survey Foot. The plans shall show the horizontal control used to establish ties to the datum, with type, size, and location, date visited, and the State Plane coordinates for each monument used. Show at least two monuments on each street in the project.

Project control may be shown on the design drawings, or on its own sheet. The Vertical datum for all survey work (including but not limited to mapping, platting, planning design, right-of-way surveys, and construction surveys) shall be the North American Vertical Datum of 1988 (NAVD 1988). The plans shall show the benchmarks used to establish ties to the datum, with reference number, description, location, and elevation of each benchmark used, and any project site benchmarks. Information on horizontal and vertical control monuments can be found in the Washington Council of County Surveyors Data Warehouse at http://plso.wadnr.gov/surveycontrol/data.htm.

Other acceptable sources for benchmarks are WSDOT, King County, and NOAA. When another benchmark is used, establish one benchmark for each datum and show on the plans. Include a local conversion factor between the two data. The benchmark used to establish the conversion factor must be the benchmark nearest to the project site.

Note 4. **Monuments** – The plans shall show all monuments, geometry, and references used to establish the right-of-way, lines referencing the right-of-way, property lines, easements, and any rights in real property shown. The plans shall show bearing and distance on monument lines, or radius, delta angle, and curve length on curving monument lines, and the station at each monument. If construction baselines other than the monument line are used, show the relation of each baseline to the monument line. Survey control and boundary information shall be shown on the design drawings, the vicinity map, or on its own sheet. The survey shall tie into a minimum of two (2) monuments with the state plane coordinate system.

Note 5. **Benchmarks** – Show site benchmarks. Project site benchmarks shall be established by measurement from two local benchmarks, meeting Third Order procedural requirements as specified in the Geospatial Positioning Accuracy Standards by the Federal Geographic Data Committee. Site benchmarks shall be set in a location that will not be disturbed by the proposed construction.

Note 6. **Rights-of-way –** Show the width on each side of the monument line, and the references used. If the right-of-way is of variable width, show the width at each end of the block.

Note 7. **Easements –** Show easements, Native Growth Retention Areas, and critical area buffers within the project area, with type, dimensions, and source reference.

Note 8. **Property Lines –** Show bearings and distances for straight property lines, and radius, delta angle, and arc length for curves.

Note 9. **Buildings –** Show the location of all existing buildings, including projections, roof overhangs, and covered breezeways. Show the perpendicular distance to the property and right-of-way lines when significant to development. Show footprints of recently demolished buildings.

Note 10. **Streets –** Show the right-of way lines, monument lines, concrete surfaces, asphalt surfaces, gravel surfaces, and channelization, centerlines, pavement edges, pavement widths, shoulders, ditch lines, curbs, sidewalks, and access locations.

Show the curbs, curb cuts, wheelchair ramps, gutter and flow lines, sidewalks, landscape areas, pedestrian and bike paths.

Note 11. **Utilities –** Field locate and show all visible utilities, structure and appurtenances. Show buried utilities and the source of the information used. Show the location, size, and description of all utilities including water, power, gas, sewer, and storm drainage systems, and appurtenances. Show elevations at rim and inverts of manholes, catch basins, and inlets. Locate and dimension all fire hydrants, vaults, utility poles, wells, etc.

Note 12. **Contours –** Show existing and proposed contours at two-foot intervals for portions of the site that will be graded and areas with slopes less than 40 percent. Show 5-foot intervals for portions of the site with slopes that exceed 40 percent but will not be disturbed.

Note 13. **Steep Slopes –** Identify the top and toe slopes 15 percent and steeper. Show the top and toe of slopes 40 percent or steeper.

Note 14. Topography – Show rockeries, retaining walls, fences, bridges, swales, culverts, etc. Show the location, length, and height above finished grade of all fences, rockeries, and retaining walls. Note heights at end and mid points.

Note 15. Significant Trees – Show evergreen trees that are eight inches or more in diameter and deciduous trees that are twelve inches or more in diameter. Diameter is measured four feet above existing grade. Label each tree with common name and diameter. Show drip lines.

Note 16. Water Features – Show lakes, rivers, streams, ditches, ponds, and other surface water features. Show the line of ordinary high water and the top of any well-defined banks. Show the 100-year floodplain, and show wetland boundaries. Show protected areas: top of bank of Type 1, 2, and 3 streams, and the centerline of Type 4 streams.

Note 17. Environmentally Sensitive Areas – Show areas defined in Sammamish's Critical Areas Ordinance (SMC Chapter 21A.50) and in the Surface Water Design Manual. If the survey shows protected areas on or adjacent to the site, contact the Department of Community Development for boundary verification prior to designing the project.

Note 18. Setbacks – Show the required primary setbacks from the protected areas.

Note 19. Underground Hazards – Show areaways, tunnels, mines and other underground hazards.

Page intentionally left blank.

APPENDIX C - SURFACE WATER REPORT GUIDELINES

Page intentionally left blank

Surface Water Report Guidelines

The Surface Water Report or Technical Information Report (TIR) is a comprehensive supplemental report containing all technical information and analyses related to storm drainage/surface water design for a project. A full TIR or abbreviated version is required for a project according to the thresholds identified in the Surface Water Design Manual. The content will also depend on the complexity of the project and site conditions.

The TIR must be prepared, stamped, and dated by a licensed Civil Engineer in Washington State.

The report submitted to the City must address each requirement and element in the Surface Water Design Manual. If a section does not apply, the engineer may simply mark "N/A" with a brief explanation. This standardized format allows a quicker, more efficient review of information required to supplement the site improvement plan.

When the report requires revisions, the revisions must be submitted in a complete revised report.

Submit two copies of the bound or stapled, 8.5” x 11” report and one PDF electronic version on a compact disk. Figures and drawings may be on larger paper. Include 11” x 17” copy of all drainage plans as an appendix of the report. Figures and drawings larger than 11” x 17” shall be provided separately from the bound document. Please number each page, including figures, and include a Table of Contents.

Page intentionally left blank.

APPENDIX D - GEOTECHNICAL REPORT GUIDELINES

Page intentionally left blank

Geotechnical Report Guidelines

The City may require a geotechnical investigation and report based on the nature of the proposal. Site development for one single-family residence on a site with no steep slopes, erosion hazards, or critical areas, may submit a report previously prepared for that site if:

- The report is less than five years old and no significant changes have occurred.
- The geotechnical engineer/engineering geologist who signed the report provides a letter stating the report is still applicable to the site and currently proposed project.

The report must be stamped, signed, and dated by a licensed professional civil engineer in Washington State, who meets the City's criteria for geotechnical engineer. The attached report outline describes the contents for the elements in a geotechnical report; the report submitted to the City must address each element in the outline.

The content under each element will depend on the complexity of the project and site conditions. For example, a single-family residence on a glacial till site without groundwater issues warrants a short, simple report. A high-rise structure with a deep excavation on an alluvial site warrants a longer, more detailed report. The report shall state "Not applicable" for each outline element that does not apply.

The Geotechnical Engineer determines the actual scope of investigation, analysis, and reporting necessary to meet the Standard of Practice with respect to the project and its geotechnical requirements.

Please use double-sided printing for the report.

Number each page.

Cover Sheet

A. The cover sheet has the:

1. Project name and address;
2. Applicant's name, address, and telephone number;
3. Engineering firm's name, address, and contact information;
4. Engineer's name and license number;
5. Report date and revision dates.

Summary

The report summary presents the major conclusions of the geotechnical investigation and their bases. This section shall be included in all lengthy or complex reports.

Introduction

The introduction sets the stage for the entire report and contains the following sections:

Overview

Introduce the formal project name, address, and parcel numbers.

Describe slope classification(s) according to SMC 21A.

Describe briefly the current or previous work used to form the basis for the conclusions and recommendations contained in the report.

Background

Describe the project's history when relevant to the reason for the investigation.

List other geotechnical reports completed for the site or adjacent sites and note whether any environmental site assessments or other environmental work has been completed.

Describe the scope of work, including grading, retaining walls, structures, construction materials, and utilities. Include dimensions, quantities, proposed finish floor elevations, maximum depth of cut or fill, foundation and floor loads, etc.

Describe all assumptions that were relied upon to develop the conclusions and recommendations contained in the report.

Purpose and Scope of Services

State succinctly the primary purpose for the geotechnical engineering services.

Summarize the scope of geotechnical engineering services that form the basis for the conclusions and recommendations contained in the report.

Indicate any limitations to the scope of geotechnical engineering services provided, particularly if the scope represents a departure from services typically provided on similar projects.

Investigations Summary

Provide the dates, general nature, and extent of the geotechnical investigation. This section should include data research, borings, test pits, geophysics, physical laboratory testing, chemical testing, field instrumentation or testing, etc.

If the investigation was complex, present a complete and detailed explanation and results in the form of an appendix.

Report Overview

Introduce and describe other sections of the report, directing the reader to critical sections, if appropriate.

Identify and describe all attachments and appendices.

SITE CONDITIONS

Describe all site features relevant to the study and the geotechnical engineering conclusions and recommendations. Terminology shall be clear and consistent through the entire report.

Location and Surface Conditions

Provide the cross streets, addresses, and parcel numbers in order to locate the site.

Describe the site and adjoining properties, including surface elevation, topography, and drainage.

Provide current uses of the site and adjacent properties.

Identify all current structures, subsurface utilities, wells, manmade fills and other surface features.

Describe vegetation, topsoil, paving, and other surface coverings.

Describe any indications of historic geological processes or hazards on or near the site (e.g., slope instability, landslides, liquefaction, flooding, etc.)

Describe any indications of surface releases or other contamination or potential contamination sources.

Describe any planned changes to the surface conditions described above which will take place after the investigation.

Geological Setting

Provide an overview of regional geology, local stratigraphy, groundwater occurrence, etc.

Subsurface Soil Conditions

Describe each soil or geologic unit encountered by their classifications and group units with respect to the properties that are most relevant to the conclusions and recommendations. Give each group unit a unique, clear, common title and consistently refer to this unit by its given title throughout the report.

Provide important results of the laboratory physical property testing and its indications of soil behavior.

Provide design infiltration rate per the current Sammamish SWDM.

Avoid detailed descriptions of the sequence of units found in individual borings; rather, focus on variations in the units across the site, if appropriate. Refer the reader to the exploration logs for details.

Describe any expected changes in subsurface conditions that may occur with time after the investigation.

Groundwater Conditions

Describe the nature and occurrence of groundwater.

Provide an opinion on likely seasonal variations in groundwater levels or flows, and the possibility for changes from those encountered at the time of exploration.

Show groundwater levels on soil logs.

Subsurface Contamination

Describe the nature and extent of soil and/or groundwater contamination as revealed by the explorations. Reference any applicable Environmental Assessments if performed.

Provide important results of the analytical laboratory testing and indications about contamination distribution and concentration.

Indicate limitations of knowledge on the nature and extent of contamination.

Discuss possible changes that may occur in these conditions over time.

DISCUSSION AND CONCLUSIONS

The Discussion and Conclusions shall set out major geotechnical issues and alternatives for the project, along with the Geotechnical Engineer's conclusions, in a succinct and clear manner. This section shall clearly describe the logic and reasoning supporting the recommended approach, or alternative approaches. Specific recommendations shall be presented in the Recommendations section.

Discussions and Conclusions should:

1. Build on information described in the previous sections;
2. Describe project features, soils and construction materials using consistent terminology;
3. Explain any apparent inconsistencies in the data or investigations;
4. Describe clearly any limitations or restrictions to the conclusions and recommendations.

Slope Stability

- Summarize data and analysis used to evaluate slope stability.
- Provide an opinion regarding the risk of instability on the site or adjacent properties currently, during construction, and after the project is completed.
- Describe how design and construction recommendations will reduce or eliminate the risk of stability.
- Discuss any construction or post-construction measures necessary to verify slope stability.

Seismic Considerations

- Provide an opinion on the expected level of ground motion during a major earthquake.
- Describe any seismic risks associated with an earthquake such as liquefaction, lateral spreading, landslides, or flooding.
- Describe how design and construction recommendations will reduce or eliminate the impact of seismic risks.

Site Work

- Describe proposed site grading and earthwork and provide an opinion on the proper sequence and approach to accomplish the site work.
- Describe key issues, which will impact earthwork, including short-term slope stability, on-site and import fill materials, groundwater and drainage, rainfall and moisture sensitive soils, and erosion.
- Describe how these key issues will be addressed during construction, including dewatering, temporary retaining structures, and erosion control.
- Include specific recommendations for on-site erosion control based on soil erodibility and the presence of groundwater, surface water, and slopes.
- Include statements regarding the importance of construction monitoring by a geotechnical engineering firm.
- Describe suitability of the possible use of native soils for structural backfill.

Retaining Structures

- Recommend appropriate temporary retaining systems.
- Recommend the most appropriate permanent retaining system or systems and describe their expected performance with respect to stability and deflection.
- Summarize the data and analysis used to evaluate permanent retaining systems.
- Clearly define all limitations on backfill materials, reinforcement, and drainage for reinforced soil slopes and reinforced soil backfill.
- Describe the limitations on such systems.
- Emphasize any aspects of site work, particularly with respect to the native soil materials, backfill and drainage, which could impact performance of the retaining structures.

- Include statements regarding the importance of construction monitoring by a geotechnical engineering firm.

Rockeries

- Emphasize that rockeries usually protect a slope face from erosion. Indicate which rockeries will protect the slope face by preventing soil erosion and sloughing.
- Include the design criteria for rockeries that serve as retaining structures. Indicate which rockeries will function as retaining structures.
- Recommend locations for rockeries such that a contractor can reach them for maintenance and repair.
- Discuss what type of inspection and testing may be required during rock wall construction.

Foundation Support

- Summarize the data and analysis used to evaluate foundation systems.
- Provide an opinion on the most appropriate foundation system and possible alternatives, along with the expected level of performance with respect to load capacity and settlement.
- Emphasize any aspects of site work that could impact the performance of foundations.
- Include statements regarding the importance of construction monitoring by a geotechnical engineering firm.

RECOMMENDATIONS

The Recommendations shall present all detailed geotechnical engineering recommendations for design and construction in a clear and logical sequence.

For each item covered in the recommendations sections, present the following:

Specific design recommendations along with their limitations, factors of safety, minimum dimensions, and effect of expected variations in actual conditions.

Specific construction recommendations including definitions, materials, execution, monitoring testing, or other quality control measures and any other construction requirements to support the design recommendations

Responsibility for seeing that each recommendation is met, such as owner, geotechnical engineer or other design consultant or contractor.

Site Grading and Earthwork

Provide specific design recommendations for:

1) Depth of stripping

2) Soil excavation limits and slopes

3) Depth and lateral limits of over-excavation to remove unsuitable materials

4) Preload fills

5) Location and thickness of particular fill material or compaction requirements

6) Maximum temporary and permanent slopes

7) Permanent surface and subsurface drainage systems

8) Permanent erosion controls.

Provide specific construction recommendations for:

1) Clearing

2) Use of on-site and/or import fill materials

3) Excavation and compaction equipment

4) Fill material moisture conditioning, placement, and compaction 5) Proof-rolling, in-place density testing and other quality control measures

6) Temporary seepage and drainage control measures

7) Permanent surface of subsurface drainage system installation (as appropriate)

8) Temporary slope protection and erosion control measures.

All design and construction methodologies shall be specific and identifiable; generalized or vague statements are NOT acceptable.

Temporary Shoring and Retaining Walls

Provide specific design recommendations for:

1) Active and passive earth pressures

2) Surcharge pressures

3) Bearing capacity

4) Minimum or maximum dimensions and depth of penetration

5) Lateral support

6) Wall or backfill drainage systems

7) Any other appropriate structured details

If appropriate, provide specific design recommendations for tie-back anchors including:

1) Anchor inclination

2) No load zones

3) Minimum anchor length

4) Anchor bond zone

5) Anchor adhesions

6) Corrosion protection

Provide specific construction recommendations for:

1) Installation

2) On-site and/or import backfill materials

3) Backfill material moisture conditioning, placement, and compaction

4) In-place density testing or other control measures

5) Seepage and drainage control

If appropriate, provide construction recommendations for tie-back anchors including:

1) Anchor installation methods

2) Anchor testing

3) Monitoring

Rockeries

Provide recommendations as outlined in the Associated Rockery Contractors (ARC) Standard Rock Wall Construction Guidelines (December 1992).

The geotechnical engineer shall provide direct input to the design of the rockeries and provide construction monitoring and testing as appropriate. Specific design parameters may include rock quality, density, and frequency of testing, slopes, keyways, surcharges, drainage, rock sizes, face inclination, and surface drainage.

Reinforced Soil Structures

Geogrid or geotextile fabric may be used to reinforce a fill. If reinforced slopes are used, the geotechnical engineer shall specify, at a minimum, the fill soil materials, vertical spacing of the reinforcement, the specific type of reinforcement and the distance to which it must extend into the fill, the amount of overlap at the reinforcement joints, and the construction sequence. Additional design parameters will be required for each specific site.

Structure and Foundations

Provide seismic design recommendations for

1) Building Code soil type and site coefficients

2) Any specific recommendations to reduce the risk of damage due to earthquakes.

Spread footing foundations – provide design recommendations for:

1) Bearing soils

2) Bearing capacity

3) Minimum footing depths and widths for both interior and exterior footings

4) Lateral load resistance

5) Foundation drainage systems

6) Frost protection

Mat foundations – provide design recommendations for:

1) Bearing soils

2) Bearing capacity

3) Modulus of subgrade reaction

4) Minimum dimensions

5) lateral load resistance

Pile foundations – provide design recommendations for:

1) Type of pile

2) Means of support (end of friction)

3) Minimum dimensions and depths

4) Allowable vertical and uplift capacity

5) Allowable lateral loads and deflections

6) Group effects and minimum spacing

Spread footing or mat foundations – provide construction recommendations for:

1) Foundation subgrade preparation and protection

2) Verification of bearing capacity

3) Installation of foundation drainage system

Pile foundations – provide construction recommendations for:

1) Pile driving equipment

2) Pile installation

3) Pile load tests or verification piles

4) Monitoring and testing during pile installation

Floors

Slab-On-Grade Floors – provide design recommendations for

1) Slab base rock thickness

2) Capillary break

3) Vapor barrier

4) Floor system drainage

Supported Wood Floors – provide design recommendations for

1) Vapor barrier

2) Crawl space drainage.

Slab-On-Grade Floors – provide construction recommendations for:

1) Subgrade preparation

2) Slab base rock placement and compaction

3) Capillary break and vapor barrier installation

4) Floor drainage system installation (when appropriate)

Pavements

Provide design recommendations for pavement design section and pavement drainage.

Provide construction recommendations for pavement subgrade preparation and verification, and pavement base and subbase materials, placement and compaction.

Utilities

Provide construction recommendations for

1) Utility excavation

2) Bedding material placement

3) Backfill material (native and/or imported), placement and compaction

Drainage

Recommend provisions for subsurface drainage at walls, floors, and footings.

Evaluate permanent and temporary surface and subsurface drainage for both walls and floors if applicable. Provide approximate flow rates in gallons per minute and pipe sizes if required by design.

Provide design and recommendation for infiltration facilities, including setbacks from steep slopes per the adopted Stormwater Design Manual.

Hazards

Present additional information if natural or man-made hazards exist on the property. The City's Critical Areas maps identify hazards such as wetlands, streams and flood hazards, erosion, and steep slopes. Recommendations shall be general, and further studies may be required.

FIGURES AND ILLUSTRATIONS

Vicinity Map

Include a Vicinity or Location Map that presents adequate street and/or other physical references to allow clear identification or the project location. This map may be an individual figure or may be included on the Site Plan.

Site Plan

Show the project boundaries, property lines, existing features and the proposed development and structures. A north arrow and scale shall be included along with all subsurface exploration locations. The accuracy of exploration locations shall be indicated on the Site Plan or in the report.

Exploration Logs

Include logs of all explorations describing soil units encountered, soil classification, density or stiffness, moisture conditions, groundwater levels, stratigraphic sequence, common geologic unit name, and other descriptive information.

Laboratory Test Data

Include figures or tables of laboratory test results if presentation of all the data, in the text, would require more than a simple paragraph to supplement the data provided in the exploration logs.

Cross Sections

Include cross sections to visually present all but the simplest subsurface conditions.

Standard Plans

Include figures, graphs and other visual aids to clearly present detailed recommendations. Provide design details (stamped by a licensed professional civil engineer in Washington State) on drawings such as: rockeries, reinforced earth, interceptor trenches, wall and footing drains, utility backfill and other details used for a particular design.

PROJECT ENGINEER'S CERTIFICATION

The report shall contain a page with the professional engineer's seal, signature, and date signed, with the following statement:

"I hereby state that this geotechnical report for _____ (name of project) has been prepared by me or under my supervision and meets the standard of care and expertise which is usual and customary in this community for professional engineers. I understand that the City of Sammamish does not and will not assume liability for the sufficiency, suitability, or performance of facilities prepared based on this report."

APPENDIX E - TRAFFIC IMPACT ANALYSIS REPORT GUIDELINES

Page intentionally left blank

Traffic Impact Analysis Guidelines

A. Introduction

A traffic impact analysis (TIA) is a specialized study of the impacts a certain type and size of development will have on the surrounding transportation system. The traffic impact analysis is an integral part of the development impact review process. It is specifically concerned with the generation, distribution, and assignment of traffic to and from the development.

The purpose of a TIA is to determine what impact development traffic will have on the existing and proposed street network and what impact the existing and projected traffic on the street system will have on the project.

These guidelines have been prepared to establish the requirements for a TIA. The public works department will be responsible under SEPA as well as City ordinances for determining the need for a TIA.

B. When Required

To adequately assess a development's traffic impact on the transportation system and its level of service (LOS), the public works department may require a traffic impact analysis (TIA). The requirement for a TIA will be based on the size of the development proposed, existing street and intersection conditions, traffic volumes, accident history, community concerns, and other pertinent factors relating to traffic impacts attributable to the development.

If a site action requires that an environmental checklist be prepared, a TIA may be required if any of the following conditions are met:

1. The development generates 10 or more trips in the peak hour(s) at any given intersection. This would include site-generated traffic for all turning movements for the peak hour(s) at all affected intersections. The public works department may require analysis of either or both the a.m. and/or p.m. peak hour, and/or peak hour of generator; or
2. The development proposes a use of the subject property, which will increase the amount of site-generated traffic; or

3. The original TIA is more than two years old.
4. Where the increase in traffic volume as measured by ADT, peak hour, or peak hour of the critical movement is more than 10 percent. If the department of public works has made the determination to require a TIA, the TIA shall follow the format outlined in subsection (D).

C. Qualifications for Preparing TIA Documents

The TIA shall be conducted under the direction of a responsible individual or firm. The TIA shall be prepared by an engineer licensed to practice in the state of Washington with special training and experience in traffic engineering and who is a member of the Institute of Transportation Engineers (ITE).

D. Scope of Work

The level of detail and scope of work of a TIA will vary with the size, complexity, and location of the development. A TIA shall be a thorough review of the immediate and long-range effects of the development on the transportation system.

1. Development Prospectus
   - **i.** Provide a reduced copy of the site plan showing the type of development, street system, rights-of-way limits, access points, and other features of significance in the development. The site plan shall also include pertinent off-site information such as locations of adjacent intersections and driveways, land use descriptions, street right-of-way limits for the existing roadways and other features of significance.
   - **ii.** Provide a vicinity map of the project area showing the transportation system to be impacted by the development
   - **iii.** Discuss specific development characteristics such as type of development proposed (single-family, multifamily, retail, industrial, etc.), internal street network, proposed access locations, parking requirements, zoning, and other pertinent factors attributable to the development.

iv. Discuss project completion and the occupancy schedule for the development. Identify horizon years for traffic analysis purposes.

2. Existing Conditions

i. Discuss street characteristics including functional classification, number of traveled lanes, lane width, shoulder treatment, bicycle path corridors, and traffic control at study intersections. A figure shall be used to illustrate existing transportation facilities.

ii. Identify safety and access problems including discussions on accident history, sight distance restrictions, traffic control, and pedestrian conflicts.

iii. Obtain all available traffic data from the City of Sammamish and surrounding jurisdictions if applicable. If data is unavailable, the individual or firm preparing the TIA shall collect the necessary data to supplement the discussions and analysis in the TIA.

iv. Conduct peak hour turning movement counts at study intersections if traffic volume data is more than two years old, unless otherwise required by the public works department. A copy of the reduced data shall be attached to the TIA when submitted to the City for review.

v. A figure shall be prepared showing existing average daily traffic (ADT) and peak(s) hour traffic volumes on the adjacent streets and intersections in the study area. Complete turning movement volumes shall be illustrated. This figure shall represent the base-line traffic volumes for analysis purposes.

3. Development Traffic

This element of the TIA shall be conducted initially to identify the limits of the study area. The study area shall include all pertinent intersections and streets impacted by development traffic.

The threshold requirement of development traffic exceeding 10 vehicles in the peak hour(s) on the adjacent streets and intersections shall apply. The individual or firm preparing the TIA shall submit to the public works department a figure

illustrating the proposed trip distribution for the development. The trip generation shall be included in a table format on the figure with the peak hour traffic volumes assigned to the study area in accordance with the trip distribution.

Once approved by the public works department, a formal “scoping” with the public works department of the development proposal shall be conducted to clearly identify the study area and contents expected in the TIA. The methodology and procedures used in preparing the trip generation and trip distribution elements of the TIA are as follows:

i. *Trip Generation*. Site-generated traffic of developments shall be estimated using the latest edition of the ITE Trip Generation Manual. Variations of trip rates will require the approval of public works. Average trip rates shall be used for all land use categories where applicable and/or required by public works. Site traffic shall be generated for p.m. and/or a.m. peak hour periods as required by public works. Adjustments made for passer-by and mixed-use traffic volumes shall follow the methodology outlined in the latest edition of the ITE Trip Generation Manual. A passer-by traffic volume discount for commercial centers shall not exceed 25 percent. For multi-use and/or phased projects, a trip generation table shall be prepared showing proposed land use, trip rates, and vehicle trips for daily and peak hour periods and appropriate traffic volume discounts if applicable.

ii. *Trip Distribution*. The trip distribution for a development shall be approved by public works prior to the formal scoping of the TIA. The methodology shall be clearly defined and discussed in detail in the TIA.

A regional trip distribution map will be required for large-scale development projects. The TIA shall identify other transportation modes that may be applicable, such as transit use, bicycle, and pedestrian facilities. Developments are encouraged to implement transportation demand management practices such as flextime for employees and ridesharing programs including carpools, vanpools, shuttle buses, etc.

4. Future Traffic

   i. *Future Traffic Conditions Not Including Site Traffic.* Future traffic volumes shall be estimated using information from transportation models for applying an annual growth rate to baseline traffic volumes. The future traffic volumes shall be representative of the horizon year for project development. Public Works shall determine an appropriate growth rate, if that option is utilized. In addition, proposed on-line development projects shall be taken into consideration when forecasting future traffic volumes.

   ii. *Future Traffic Conditions Including Site Traffic.* The site-generated traffic shall be assigned to the street network in the study area based on the approved trip distribution model. The site traffic shall be combined with the forecasted traffic volume to show the total traffic conditions estimated at development completion. A figure will be required showing daily and peak period turning movement volumes for each traffic study intersection. In addition, a figure shall be prepared showing the base-line volumes with site-generated traffic added to the street network. This figure will represent site-specific traffic impacts to existing conditions.

5. Traffic Operations

   i. The level of service (LOS) and capacity analysis shall be conducted for each pertinent intersection in the study area as determined by the TIA scoping process. The methodology and procedures for conducting the capacity analysis shall follow the guidelines specified in the latest Highway Capacity Manual. The individual or firm preparing the TIA shall calculate the intersection LOS for each of the following conditions:

      1) Existing peak hour traffic volumes (figure required).

      2) Future traffic volumes not including site traffic but including pipeline projects (figure required).

      3) Future traffic volumes including site traffic (figure required).

      4) LOS results for each traffic volume scenario (table required).

ii. The LOS table shall include LOS results for a.m. peak, p.m. peak, and peak hour of generator if applicable. The table shall show LOS conditions with corresponding vehicle delays for signalized intersections and LOS conditions for the critical movements at unsignalized intersections. For signalized intersections, the LOS conditions and average vehicle delay shall be provided for each approach and the intersection as a whole. The capacity analyses for existing signalized intersections shall include existing phasing, timing, splits and cycle lengths in the analysis as observed and measured during the peak hour traffic periods. All traffic signal system operational data will be made available by the City of Sammamish.

iii. If the "new development" is scheduled to be completed in phases, the TIA shall conduct a LOS analysis for each separate development phase. The incremental increases in site traffic from each phase shall be included in the LOS analysis for each proceeding year of development completion. A figure will be required for each horizon year of phased development.

iv. If the development impacts a traffic signal coordination system currently in operation, the TIA will include an operational analysis of the system. Timing plans and proposed modifications to the coordination system will be analyzed. The capacity analysis shall be conducted using a City approved software package. The computer worksheets of each capacity analysis shall be submitted concurrently with the TIA document. For unsignalized intersections, the methodology from the latest edition of the Highway Capacity Manual shall be used. For roundabout intersections, the capacity analysis shall be conducted using City approved roundabout analysis software. A copy of the capacity analyses worksheets shall be submitted concurrently with the TIA document.

6. Mitigation

The TIA shall include a proposed mitigation plan. The mitigation may be either the construction of necessary transportation improvements or contributions to the City

for the developments of a fair share of the costs for identified future transportation improvements. Level of service of “E” and “F” shall be used as the threshold for determining appropriate mitigating measures on roadways and intersections in the study area. Mitigating measures shall be required to the extent that the transportation facilities operate at a level of service “D” condition or better upon completion of the development. The following guidelines shall be used to determine appropriate mitigating measures of traffic impacts generated by new developments.

i. On transportation facilities where the need is to construct improvements by the horizon year of the development, the cost for the mitigation will be entirely borne by the development. However, in the event public works identifies more than one development under simultaneous review, cumulative impacts, and distribution of mitigation costs will be considered. A latecomer’s agreement could be formulated by the applicant for reimbursement of mitigation costs.

ii. On transportation facilities programmed for improvements as part of a City project, the adverse traffic impacts of the development will be considered mitigated by the applicant providing a proportionate share contribution of the costs for the proposed improvements. The proportionate share of costs for the improvements shall be based on the percentage of highest peak hour development traffic generated through the intersection. The percentage shall be based on the total projected peak hour traffic volumes for the horizon year of the transportation facility.

iii. If the transportation facility currently operates at less than level of service “D”, the development may be required to make interim facility improvements to improve the level of service to LOS “D” or better. The cost of the interim improvements will be deducted from the development’s proportionate share of costs for the programmed facility improvements only if the cost of the interim improvements is less than the ultimate proportionate share. If the interim improvements cannot be incorporated into the ultimate improvements programmed for the

transportation facility, there will be no reimbursement for interim costs incurred.

iv. On transportation facilities where the existing level of service condition is less than LOS "D" and where no improvements are programmed to improve capacity and traffic operations, the "new development" shall mitigate the intersection to an acceptable level of service "D" condition or wait until the improvements are implemented by the City or other developments.

v. Unsignalized intersections that currently operate less than a level of service "D" condition shall be analyzed for traffic signal and intersection improvements. If traffic signal warrant is satisfied, signal, or roundabout, or intersection improvements will be required as a mitigating measure for the development. If it is determined by the Public Works Department that traffic signal warrants are close to being satisfied by the development's horizon year, the TIA shall determine if traffic signal warrants and intersection improvements would be needed within a five-year period after the development's horizon year. The development would be required to provide a proportionate share of the cost as a traffic mitigation fee towards future traffic signal and intersection improvements if warranted within the five-year period.

However, if traffic signal warrants were not satisfied after a five-year period from the development's horizon year, mitigation fees would not be required from the development for traffic signal improvements.

vi. Signalized intersections where the projected level of service condition is at "D", but where one or more of the level of service conditions on the approaches falls below level of service "D", mitigating measures may be required to improve the capacity and traffic operations at the intersection. The City reserves the right to review all adverse traffic impacts at these intersections and to determine appropriate mitigating measures.

vii. Where there are no bicycle lanes on abutting streets, which have been identified in the City's capital improvement plan or bike, trails, bikeways,

pathways plan as streets to have bicycle lanes, the applicant shall provide sufficient right-of-way to allow the construction of the planned bicycle lane.

viii. To mitigate pedestrian impacts, a concrete gutter/curb/sidewalk section shall be constructed along abutting streets. For formal plats, to provide for the safety of schoolchildren walking to the bus, concrete curbs, gutters, and sidewalks shall be provided along each side of all interior plat roads. To mitigate pedestrian impacts, a bus stop shelter on a concrete pad shall be constructed where Metro Transit and/or the school district has identified a need for a bus stop to serve the development and the citizens of Sammamish. Metro Transit and/or the school district shall provide design standards for the bus shelter.

Page intentionally left blank.

APPENDIX F - RIGHT-OF-WAY STREET TREE LIST

Page intentionally left blank.

Right of Way Street Tree List

The following list is a guide for general use within the public Rights of Way (ROW) in the City of Sammamish. Any changes or additions requested shall be required to be approved by the Public Works and Parks & Recreation Directors on a case by case basis. For consideration of conifers within the ROW at a minimum there must be:

1. Ample area for root growth whereas roots will not impact finish surfaces (asphalt, concrete, etc.)
2. No impact to pedestrian and vehicular sight distances
3. The recommendation shall be made by a licensed arborist and include all details necessary pertaining to the tree species proposed.
4. Vertical clearances shall be maintained in a manner appropriate for the application.

Exhibit 3

Exhibit 3

LARGE COLUMNAR TREES

Scientific & Common Name	Mature Height (ft.)	Spread (ft.)	Under Wires/View Covenants	Min Strip Width (ft.)	Flower Color	Fall Color	Comments
Acer nigrum 'Green Column' Green Column Black Sugar Maple	50	10	No	6	N/A		Good close to buildings
Nyssa sylvatica Tupelo	50	25	No	6	N/A		Handsome chunky bark – Great Plant Pick
Quercus 'Crimschmidt' Crimson Spire Oak	45	15	No	6	N/A		Hard to find in the nursery trade
Quercus frainetto Italian Oak	50	30	No	6	N/A		Drought resistant – beautiful green, glossy leaves in summer. Great Plant Pick
Quercus robur 'fastigiata' Skyrocket Oak	40	15	No	6	N/A		Columnar variety of oak

LARGE TREES

Scientific & Common Name	Mature Height (ft.)	Spread (ft.)	Under Wires/View Covenants	Min Strip Width (ft.)	Flower Color	Fall Color	Comments
Acer saccharum 'Bonfire' Bonfire Sugar Maple	50	40	No	8	N/A		Fastest growing sugar maple
Acer saccharum 'Commemoration' Commemoration Sugar Maple	50	35	No	8	N/A		Resistant to leaf tatter. Great Plant Pick
Acer saccharum 'Green Mountain' Green Mountain Sugar Maple	45	35	No	8	N/A		Reliable fall color. Great Plant Pick

Exhibit 3

Scientific & Common Name	Mature Height (ft.)	Spread (ft.)	Under Wires/View Covenants	Min Strip Width (ft.)	Flower Color	Fall Color	Comments
Acer saccharum 'Legacy' Legacy Sugar Maple	50	35	No	6	N/A		Limited use - where sugar maple is desired in limited planting strip area. Great Plant Pick
Aesculus flava Yellow Buckeye	60	40	No	8			Least susceptible to leaf blotch – large fruit – fall color is varied, but quite beautiful
Cercidiphyllum japonicum Katsura Tree	40	40	No	6	N/A		Needs lots of water when young – can produce large surface roots. Great Plant Pick
Fagus sylvatica Green Beech	90	40	No	8	N/A		Silvery-grey bark
Fagus sylvatica 'Asplenifolia' Fernleaf Beech	70	40	No	8	N/A		Beautiful cut leaf. Great Plant Pick
Gymnocladus dioicus 'Espresso' Espresso Kentucky Coffee	50	35	No	8	N/A		Very coarse branches - extremely large bi-pinnately compound leaves
Liriodendron tulipifera Tulip Tree	60	30	No	8	N/A		Fast-growing tree – can get very large in open conditions
Quercus bicolor Swamp White Oak	50	45	No	8	N/A		Interesting shaggy peeling bark
Quercus coccinea Scarlet Oak	50	40	No	8	N/A		Best oak for fall color
Quercus imbricaria Shingle Oak	60	50	No	8	N/A		Nice summer foliage - leaves can persist throughout the winter
Quercus muhlenbergii Chestnut Oak	60	50	No	8	N/A		coarsely toothed leaf

Exhibit 3

Scientific & Common Name	Mature Height (ft.)	Spread (ft.)	Under Wires/View Covenants	Min Strip Width (ft.)	Flower Color	Fall Color	Comments
Quercus robur English Oak	50	40	No	8	N/A		Large, sturdy tree. Acorns do not need dormant cold period to germinate, so can be invasive.
Quercus rubra Red Oak	60	45	No	8	N/A		Fast growing oak – large tree that needs space
Quercus velutina Black Oak	70	50	No	8	N/A		More drought tolerant than red oak
Taxodium distichum Bald Cypress	65	35	No	8	N/A		A deciduous conifer, broadly spreading when mature – columnar when young. Great Plant Pick
Ulmus 'Homestead' Homestead Elm	60	35	No	6	N/A		Complex hybrid - close in form to American elm - Resistant to Dutch elm disease
Ulmus 'Frontier' Frontier Elm	50	35	No	6	N/A		Resistant to Dutch elm disease
Zelkova serrata 'Greenvase' Green Vase Zelkova	45	40	No	6	N/A		Attractive exfoliating bark provides Winter appeal. Dark green leaves turn orange-red and purple in Fall. Great Plant Pick
Zelkova serrata 'Village Green' Village Green Zelkova	40	40	No	6	N/A		Green Vase, Mussichino and Halka are improved forms. Great Plant Pick

MEDIUM / LARGE TREES

Scientific & Common Name	Mature Height (ft)	Spread (ft)	Under Wires/View Covenants	Min Strip Width (ft)	Flower Color	Fall Color	Comments
Acer campestre Hedge Maple	40	30	No	5	N/A		Contrary to its name, this is not a small tree – nice overall shape and structure
Acer campestre 'Evelyn' Queen Elizabeth Hedge Maple	40	30	No	5	N/A		More upright branching than the species.
Acer freemanii 'Autumn Blaze' Autumn Blaze Maple	50	40	No	6	N/A		Cross between red and silver maple – fast growing with good fall color
Acer miyabei 'Morton' State Street Maple	40	30	No	8	N/A		Similar to, but faster growing and larger than Hedge maple
Acer pseudoplatanus 'Atropurpureum' Spaethii Maple	40	30	No	8	N/A		Leaves green on top purple underneath.
Aesculus x carnea 'Briottii' Red Horsechestnut	30	35	No	6			Resists heat and drought better than other horsechestnuts
Nothofagus antarctica Antarctic Beech	50	30	No	6	N/A		Rugged twisted branching and petite foliage – difficult to find in the nursery trade
Tilia americana 'Redmond' Redmond Linden	60	35	No	8	N/A		Pyramidal, needs extra water when young

Tilia cordata 'Greenspire' Greenspire Linden	40	30	No	6	N/A		Symmetrical, pyramidal form – sometimes has structural issues due to tight branch attachements
Ulmus parvifolia 'Emer II' Allee Elm	60	40	No	8	N/A		Exfoliating bark and nice fall color – Resistant to Dutch Elm Disease

MEDIUM COLUMNAR TREES

Scientific & Common Name	Mature Height (ft)	Spread (ft)	Under Wires/View Covenants	Min Strip Width (ft)	Flower Color	Fall Color	Comments
Carpinus betulus 'Fastigiata' Pyramidal European Hornbeam	35	20	No	6	N/A		Broadens when older. Great Plant Pick
Fagus sylvatica 'Dawyck Purple' Dawyck Purple Beech	45	15	No	6	N/A		Purple foliage.
Liriodendron tulipifera 'Fastigiatum' Columnar Tulip Tree	60	20	No	6			Good next to buildings – can have problems with tight branch angles. Great Plant Pick
Malus 'Tschonoskii' Tschonoskii Crabapple	30	15	Yes	4			Sparse green fruit, pyramidal
Oxydendron arboreum Sourwood	35	15	No	4			Consistent and brilliant fall color. Great Plant Pick

Pyrus calleryana 'Cambridge" Cambridge Pear	40	15	No	4			Narrow tree with better branch angles and form than the species – brittle limbs may be a problem with ice or wet snow. Limit large plantings.

MEDIUM TREES

Scientific & Common Name	Mature Height (ft)	Spread (ft)	Under Wires/View Covenants	Min Strip Width (ft)	Flower Color	Fall Color	Comments
Acer grandidentatum 'Schmidt' Rocky Mt. Glow Maple	25	20	Yes	5	N/A		Intense red fall color - Limited availability in nursery trade
Acer truncatum x A. platanoides 'Keithsform Norwegian Sunset Maple	35	25	No	6	N/A		Reliable fall color - nice reddish orange
Acer truncatum x A. platanoides 'Warrensred' Pacific Sunset Maple	30	25	Yes	6	N/A		Limited use under higher wires
Betula albosinenesis var septentrionalis Chinese Red Birch	40	35	No	6	N/A		White and pink peeling bark. Great Plant Pick
Carpinus caroliniana American Hornbeam	25	20	Yes	6	N/A		Outstanding fall color (variable – yellow, orange, red) – nice little tree. Great Plant Pick

Exhibit 3

Scientific & Common Name	Mature Height (ft)	Spread (ft)	Under Wires/View Covenants	Min Strip Width (ft)	Flower Color	Fall Color	Comments
Cladrastis kentukea Yellowwood	40	40	No	6			White flowers in spring, resembling wisteria flower – blooms profusely only every 2 to 4 years – yellow/gold fall color
Cornus controversa 'June Snow' Giant Dogwood	40	30	No	6			Frothy, 6-inch clusters of white flowers in June – Great Plant Pick
Crataegus crus-galli 'Inermis' Thornless Cockspur Hawthorne	25	30	Yes	4			Red persistent fruit
Cornus 'Eddie's White Wonder' Eddie's White Wonder Dogwood	30	20	Yes	4			A hybrid of C. florida and C. nuttalii
Crataegus x lavalii Lavalle Hawthorne	25	20	Yes	4			Thorns on younger trees. Great Plant Pick
Davidia involucrata Dove Tree	40	30	No	6		N/A	Large, unique flowers in May. Great Plant Pick
Eucommia ulmoides Hardy Rubber Tree	50	40	No	8	N/A	N/A	Dark green, very shiny leaves – insignificant fall color
Fagus sylvatica 'Rohanii' Purple Oak Leaf Beech	50	30	No	8	N/A	N/A	Attractive purple leaves with wavy margins. Great Plant Pick
Halesia monticola Mountain Silverbell	45	25	No	4			Attractive small white flower
Halesia tetraptera Carolina Silverbell	35	30	No	4			Attractive bark for seasonal interest

Exhibit 3

Scientific & Common Name	Mature Height (ft)	Spread (ft)	Under Wires/View Covenants	Min Strip Width (ft)	Flower Color	Fall Color	Comments
Koelreuteria paniculata Goldenrain Tree	30	30	Yes	4			Midsummer blooming – slow growing. Great Plant Pick
Magnolia denudata Yulan Magnolia	40	40	No	4		N/A	6" inch fragrant white flowers in spring. Great Plant Pick
Magnolia grandiflora 'Victoria' Victoria Evergreen Magnolia	25	20	Yes	4		N/A	Evergreen magnolia – can be damaged in years with wet, heavy snow. Limit large plantings. Most suitable for protected locations close to buildings. Great Plant Pick
Magnolia kobus 'Wada's Memory' Wada's Memory Magnolia'	30	20	Yes	4			Does not flower well when young. Great Plant Pick
Ostrya virginiana Ironwood	40	25	No	4	N/A		Hop like fruit – slow growing
Phellodendron amurense 'Macho' Macho Cork Tree	40	40	No	6	N/A		This variety is fruitless – fall color can be varied. High drought tolerance
Prunus cerasifera 'Krauter Vesuvius' Vesuvius Flowering Plum	30	20	Yes	4		N/A	Burgundy colored leaves – tree best used as an accent rather than in mass plantings
Quercus Ilex Holly Oak	40	30	No	6	N/A	N/A	Evergreen oak - Underside of leaf is silvery-white. Often has a prominent umbrella form

Exhibit 3

Scientific & Common Name	Mature Height (ft)	Spread (ft)	Under Wires/View Covenants	Min Strip Width (ft)	Flower Color	Fall Color	Comments
Rhamnus purshiana Cascara	30	20	Yes	4	N/A		Native tree – fall color depends on exposure – purplish fruit feeds many native birds
Sorbus x hybridia Oakleaf Royal Mt. Ash	30	20	Yes	4			It has leaves which are similar to English oak, and interesting bark for seasonal features.
Styrax japonica Japanese Snowbell	25	25	Yes	4			Reliable and easy to grow, it has plentiful, green ½" inch seeds. Flowers similar to lily in the valley. Great Plant Pick
Tilia cordata 'De Groot' De Groot Littleleaf Linden	40	20	Yes	5	N/A		One of the smaller stature littleleaf lindens.
Tilia cordata 'Chancole' Chancelor Linden	35	20	No	6	N/A		Pyramidal when young. Fragrant flowers that attract bees.
Ulmus parvifolia 'Emer I' Athena Classic Elm	30	35	No	4	N/A		High resistance to Dutch Elm Disease. Drought resistant. Cinnamon colored exfoliating bark for seasonal interest.

SMALL COLUMNAR TREES

Scientific & Common Name	Mature Height (ft)	Spread (ft)	Under Wires/View Covenants	Min Strip Width (ft)	Flower Color	Fall Color	Comments

Maackia amurensis Amur Maackia	30	20	Yes	4		N/A	Interesting exfoliating bark – flowering in June or July - varies in intensity from year to year
Malus 'Adirondack' Adirondack Crabapple	20	10	Yes	4			Very resistant to apple scab – one of the narrowest crabapples – persistent reddish ¼" fruit. Great Plant Pick
Malus 'Red Barron' Red Barron Crabapple	20	10	Yes	4			Deep pink blossom and persistent red berries for seasonal interest
Prunus serrulata 'Amanogawa' Amanogawa Flowering Cherry	20	10	Yes	4			Pinkish flower bud, changing to white flower.
Sorbus americana 'Dwarfcrown' Red Cascade Mountain Ash	20	10	Yes	4			Nice winter form - Red berries persistent in clusters

SMALL TREES

Scientific & Common Name	Mature Height (ft)	Spread (ft)	Under Wires/View Covenants	Min Strip Width (ft)	Flower Color	Fall Color	Comments
Acer buegerianum Trident Maple	25	25	Yes	4	N/A		Somewhat shrub-like – must train to a single stem – interesting bark. Great Plant Pick
Acer ginnala 'Flame' Flame Amur Maple	25	20	Yes	4			Clusters of small cream colored flowers in spring – very fragrant. Nice fall color. Informal branch structure.

Exhibit 3

Scientific & Common Name	Mature Height (ft)	Spread (ft)	Under Wires/View Covenants	Min Strip Width (ft)	Flower Color	Fall Color	Comments
Acer griseum Paperbark Maple	25	20	Yes	4	N/A		Peeling cinnamon colored bark for seasonal interest. Great Plant Pick
Acer palmatum Japanese Maple	20	25	Yes	4	N/A		Many varieties available – select larger varieties for street planting
Acer triflorum Three-Flower Maple	25	20	Yes	4	N/A		Multi seasonal interest with tan, exfoliating bark and red, orange/red fall color. Great Plant Pick
Amelanchier grandiflora 'Princess Diana' Princess Diana Serviceberry	20	15	Yes	4			Good for narrower planting strips
Amelanchier x grandiflora 'Autumn Brilliance Autumn Brilliance Serviceberry	20	15	Yes	4			Good for narrower planting strips – reliable bloom and fall color
~~*Arbutus unedo* 'Marina'~~ ~~Strawberry Tree~~	~~25~~	~~20~~	~~Yes~~	~~4~~		~~N/A~~	~~Substitute for Pacific madrone – can suffer severe damage or death due to cold weather – evergreen. Limit large plantings.~~
Carpinus japonica Japanese Hornbeam	30	25	Yes	6	N/A		Wide spreading, slow growing – fall color is not outstanding. Great Plant Pick
Cercis canadensis Eastern Redbud	25	30	Yes	4			Deep pink flowers on bare twigs in spring
Cercis siliquastrum Judas Tree	25	30	Yes	4			Deep pink flowers on bare twigs in spring – drought resistant

Exhibit 3

Scientific & Common Name	Mature Height (ft)	Spread (ft)	Under Wires/View Covenants	Min Strip Width (ft)	Flower Color	Fall Color	Comments
Cornus alternifolia Pagoda Dogwood	25	25	Yes	4			Small white flowers in flat clusters – fall color is varied. Great Plant Pick
Cornus kousa 'Chinensis' Kousa Dogwood	20	20	Yes	4			Does not do well on harsh, dry sites. Limit large plantings. Great Plant Pick
Cotinus obovatus American Smoke Tree	25	25	Yes	4			Showy pinkish panicles of flowers in the spring – reddish purple leaves on some varieties. Great Plant Pick
Lagerstroemia 'tuscarora' Tuscarora Hybrid Crape Myrtle	20	20	Yes	4			Light cinnamon brown bark lends year round interest – drought resistant – likes a warm site
Magnolia 'Elizabeth' Elizabeth Magnolia	30	20	Yes	4		N/A	Yellowish to cream colored flower in spring. Great Plant Pick
Magnolia 'Galaxy' Galaxy Magnolia	25	25	Yes	4			Showy pink flowers. Great Plant Pick
Magnolia x loebneri Loebner Magnolia	20	20	Yes	4			Flower is 'star' shaped rather than tulip like – white to pinkish white in March or April. Great Plant Pick
Malus 'Golden Raindrops' Golden Raindrops Crabapple	20	20	Yes	4			Disease resistant – persistent yellow fruit in fall and winter. Great Plant Pick

Exhibit 3

Scientific & Common Name	Mature Height (ft)	Spread (ft)	Under Wires/View Covenants	Min Strip Width (ft)	Flower Color	Fall Color	Comments
Malus 'Donald Wyman' Donald Wyman Crabapple	25	25	Yes	4			Large white blossom – nice green foliage in summer
Malus 'Lancelot' ('Lanzam') Lancelot Crabapple	15	15	Yes	4			Red flower buds, blooming white – red persistent fruit
Parrotia persica Persian Parrotia	30	25	Yes	4			Blooms before it leafs out – drought tolerant - Varied fall color - reds, oranges and yellows. Great Plant Pick
Prunus 'Frankthrees' Mt. St. Helens Plum	20	20	Yes	4		N/A	Burgundy colored leaves – tree best used as an accent rather than in mass plantings
Prunus 'Newport' Newport Plum	20	20	Yes	4		N/A	Burgundy colored leaves – tree best used as an accent rather than in mass plantings
Prunus 'Snowgoose' Snow Goose Cherry	20	20	Yes	4			This selection sports abundant white flowers and healthy green, disease-resistant foliage
Prunus x yedoensis 'Akebono' Akebono Flowering Cherry	25	25	Yes	4			Has masses of large, semi-double, pink flowers – most widely planted cherry in Pacific Northwest
Sorbus alnifolia Korean Mountain Ash	40	25	No	6			Simple leaves and beautiful pink/red fruit. Great Plant Pick

Exhibit 3

Scientific & Common Name	Mature Height (ft)	Spread (ft)	Under Wires/View Covenants	Min Strip Width (ft)	Flower Color	Fall Color	Comments
Stewartia monodelpha Orange Bark Stewartia	30	20	Yes	4			Extraordinary cinnamon colored bark – avoid hot, dry sites. Great Plant Pick
Stewartia psuedocamellia Japanese Stewartia	30	20	Yes	6			Patchwork bark, white flower in spring. Great Plant Pick
Styrax obassia Fragrant Styrax	25	20	Yes	4			Smooth gray bark and fragrant white flowers. Great Plant Pick

Page intentionally left blank.

Exhibit 3

APPENDIX G - RECORD DRAWING CRITERIA

Page intentionally left blank.

Record Drawing Requirements (As-Builts)

Record drawings for all right-of-way construction projects and for surface water drainage systems that connect to City infrastructure, are required prior to a request for final inspection or issuance of Certificate of Occupancy.

A. Record drawings shall accurately reflect revisions made to approved plans during construction. The record drawings shall locate all newly installed, existing, and abandoned utilities encountered during construction, but not shown on the approved plans.

B. Record drawings shall be stamped, signed, and dated by a State of Washington Registered Civil Engineer.

C. As-constructed survey information provided on a record drawing shall be provided by a licensed land surveyor.

D. The Applicant shall provide the City inspector preliminary record drawings on paper. Once the City approves the preliminary submittal, the Applicant provides the final record drawings in the following formats. Each plan sheet shall bear the engineer and the surveyor stamps, signature, and date signed:

1. Paper (for review only);
2. Mylar (22 inches by 34 inches) (Upon request after completed review);
3. AutoCAD format; and
4. PDF electronic file

E. Each sheet of the record drawings shall include the following statement located in the bottom right hand corner of the sheet.

> **"These plans are record drawings and the information shown accurately reflects existing field conditions as of this date _____."**

F. Final corrected drainage Technical Information Report (TIR) shall be submitted in accordance to the requirements of the Surface Water Design Manual.

CAD GUIDELINES

A. Required Electronic Submittals:

1. AutoCAD Civil 3D 2014.
2. Xref file (External reference files) = these are other files that are linked to the main drawing such as other drawings and images. All Xref files shall be merged into one drawing file.
3. *.ctb files = this is the color settings file.
4. PDF file of the complete drawing.

B. Survey Info:

1. Horizontally referenced to WA State Plane Coordinates, North Zone, NAD 83 HARN GCS 4602 in Survey Feet.
2. Vertically referenced to NAVD 1988, feet.
3. Provide eastings and northings for existing and new monuments and benchmarks in the coordinate system referenced, as an embedded or separate table.

C. Drafting Guidelines

1. When record drawings reflect changes in the permitted plans, strike throughs shall be used on design details such as pipe inverts, pipe soffits, pipe slopes, pipe sizes, pipe materials, and grading changes and the recorded information displayed adjacent to the strike out details.
2. Layering Designations in CAD Files shall be separated and delineated for storm facilities (separate layers for pipes, catch basins and other structures), water utilities, sanitary sewer utilities, buildings, pavement edges, sidewalks, curb ramps, water bodies, wetlands, poles, trees, property lines, ROW boundaries, luminaires, signs, pavement markings, traffic signals, barriers, handrails, guard rails, landscape areas and fences.

3. All lines shall be snapped and closed, and attributes shall be defined on Layer 0.
4. Drawings shall be purged of empty, unused, or non-essential drawing data.
5. Drawings shall be in full-scale format (1ft =1ft).
6. All plan sheets shall be drafted to fit 22x34 inch paper scale.
    - **i.** Layout Management:
    - **ii.** All elements shall be created in Model space. (Note: The City's GIS software does not draw features created in Paper space).

Page intentionally left blank.

APPENDIX H - ENGINEERING DEVIATION CRITERIA

Page intentionally left blank.

Deviation from Public Works Standards Guidelines

Deviations from public works standards is a mechanism to allow the City to grant an adjustment in the application of the public works standards where there are unique circumstances relating to the proposal.

A. Decision Criteria

The Director of Public Works shall grant a deviation from the Public Works Standards only if the applicant demonstrates all of the following;

1. The granting of such deviation will not be materially detrimental to the public welfare or injurious or create adverse impacts to the property or other property(s) and improvements in the vicinity in which the subject property is located.
2. The authorization of such deviation will not adversely affect the implementation of the Comprehensive Plan adopted in accordance with State Law.
3. The deviation shall not conflict with the standards of the critical areas regulations SMC 21A.50.
4. The deviation from the Public Works Standards shall only be granted if the proposal meets the following:
    - **i.** Conform to the intent and purpose of the Sammamish Municipal Code;
    - **ii.** Based upon sound engineering judgement;
    - **iii.** The requirements for safety, environmental consideration, function, appearance, and maintainability are fully met;
    - **iv.** The deviation is in the best interest for the public.
5. A deviation from roadway design standards must meet the objectives for fire protection. Any deviation that does not meet the International Fire Code shall also require approval by the Fire Marshall.

B. Procedure

1. Applicant shall submit a deviation request in the format of the approved City of Sammamish Deviation Review form. Any supporting figures and plans shall be on a size no larger than 11”x17”.
2. The Engineering department shall review the deviation request to ensure that all decision criterial are met. Recommendations shall be submitted to the Public Works Director for approval or denial.
3. The Public Works Director shall approval or deny the deviation request and provide a summary of conclusions to the applicant.

APPENDIX I - RIGHT OF WAY VACATION

Page intentionally left blank.

Street and Alley Vacation Procedures

A street "vacation" means that the public is letting go of, or "vacating," the public interest in a public right-of-way. After a street or an alley is vacated, the public no longer has a right to the use of the property for access. The purpose of the appendix section is to establish the procedures, notice requirements and fees for the vacation of streets and within the City. This appendix is intended to implement the authority granted to the City by Chapter 35.79 RCW and RCW 35A.47.020 and to conform to their provisions.

A. Initiation of Vacation

The owners of an interest in any real property abutting upon any public right-of-way who may desire to vacate the full right-of-way, or any part thereof, may petition the City council. In the alternative, the City council may itself initiate a vacation by resolution. The petition or resolution shall be filed with the City clerk.

B. Petition for Vacation

The petition shall be in the form prescribed by the Public Works Director. The petition shall also discuss the criteria set forth. The sufficiency of the petition shall be governed by RCW 35A.01.040.

C. Petition Fees

Every petition for the vacation shall be accompanied by a fee in the amount established by resolution by the City to defray the administrative costs incurred in processing the petition, publishing, posting and mailing notices, plus any consulting costs incurred by the City during the review process.

D. Survey, Vicinity Map, Plat Map and Legal Description

1. Every petition shall be accompanied by:

    i. A survey, containing an exact legal description of the portion of the right – of-way to be vacated prepared and sealed by a professional land surveyor, registered in the State of Washington;

    ii. A vicinity map showing the general area of the proposed vacation;

iii. A plat map prepared and sealed by a professional land surveyor, registered in the State of Washington, indicating the specific parcels abutting the proposed right of way to be vacated;

iv. A name and address of all property owners for the properties which lie within three hundred (300) feet of the right of way to be vacated.

2. Flagging which indicates the boundaries of the right-of-way shall be installed within the survey is conducted.

E. Setting of Hearing

Upon receipt of the petition, fee, and all required documents, the City Clerk shall make a determination whether the petition has been signed by the owners of more than two-thirds (2/3) of the property owners abutting the part of the right-of-way to be vacated. The City clerk shall then forward the petition and required documents to the Public Works Director for further review and action. If the petition has been signed by required signatures, the petition shall be forwarded to the City Council. The City council shall, by resolution, fix a time when the petition will be heard and determined by the City council or committees. The hearing shall not be more than 60 days nor less than 20 days after the date of adoption of the resolution. Where the City Council initiates the vacation by resolution, that resolution shall fix a time when the proposed vacation will be heard by the City Council or committee.

F. Staff Report

The public works department shall prepare a report concerning the proposed vacation, which shall address the criterial listed in this Appendix. The City Council shall use this report in determining whether to vacate the right-of-way or a portion thereof, and such other information as deemed appropriate by the department. In preparing the report, the department shall solicit comments from the police, fire, other City departments, utilities, and other governmental agencies which may be affected by the right-of-way vacation. The report shall be submitted to the City Council, or Committee members hearing the matter, and to the petitioners, not less than five (5) days before the hearing.

G. Notice of Hearing

Upon passage of the resolution fixing the time for the hearing the petition or proposal for vacation, the City Clerk shall give notice to the time, place and purpose of the hearing as set forth in RCW 35.79.020 and by;

1. Publishing written notice once in the City's official newspaper;
2. Posting a placard in a visible palace at each end of right-of-way to be vacated. The placard shall be highly visible and at least 11 by 14 inches in size, and shall include a map showing the location of the right-of-way to be vacated;
3. Mailing written notice to all petitioners at the address on the petition and all owners of property abutting the right-of-way to be vacated, as shown on the records of the King County assessor. In addition, notice shall be given to the owners of property which lie within 300 feet beyond the right-of-way to be vacated, measuring in both directions around the subject area. The public works department shall send the same written notice to the petitioners at the address on the petition.

H. Protest

If 50 percent or more of the owners of the abutting property file written objections with the City clerk, prior to the time of the hearing, the City shall not proceed with the resolution.

I. Compensation for the Vacation

1. Where a vacation has been initiated by petition, the owners of the property abutting the area vacated, shall pay to the City, prior to the effective date of the ordinance vacating the area, a sum equal to one-half of the appraised value of the area, plus the full cost of physical closure and road repairs.
2. Where the vacation was initiated by the City Council or was a requirement by the City as a condition of a permit or approval, the owners of the property abutting the area vacated shall not be required to pay such sum that includes the appraised value of the area and costs associated with the physical closure.

3. Where the vacation was acquired at public expense, the owners of the properties abutting the vacated area shall pay to the City a sum equal to the full appraised value of the area to be vacated.
4. Conveyance of other property acceptable to the City may be made in lieu of the required payment, where required to mitigate adverse impacts of the vacation. When the conveyance is made for street purposes, one-half of the fair market value of the land conveyed shall be credited to the required payment. When the conveyance is made in fee for purposes other than street purposes, the full appraised value of the land conveyed shall be credited to the required payment.
5. When the value of the in-lieu parcel is less than the required payment, the petitioners shall pay the difference to the City. When value of the in-lieu area exceeds the required payment, the City shall pay the difference to the petitioners.

J. Appraisals

1. The director of public works shall determine the appraised value of the area vacated based on an appraisal from a state-certified real estate appraiser who has an MAI or SRA designation from the Appraisal Institute. To obtain such appraisal, the director shall present to the representatives of the petitioners a list of three such certified and designated appraisers from which one shall be selected. The petitioner shall pay from the appraisal. If the director is not satisfied with eh appraisal, the director may order a second appraisal form a state-certified appraiser. The City shall pay for the second appraisal.
2. The director shall use the appraisal having the highest value for the area to be vacated. The Director of Public Works shall be responsible for obtaining the appraisal for areas to be granted to the City in-lieu of cash payment as stated in this Appendix.

K. Payment of Compensation of Conveyance

After determining the appraisal value of the right-of-way to be vacated, the Director of Public Works shall notify the representative of the petitioners of the amount of compensation. The payment shall be delivered to the director, who upon receipt of payment, shall transmit it to the

finance department for deposit in the street fund and shall make a written report of the payment to the City council. If the petitioner has been authorized to deliver an instrument granting or dedicating to the City a parcel or parcels of land in lieu of cash payment, the director, at the petitioner's expense, may obtain either a policy of title insurance insuring title of the property in the City, or a certificate of title as to the title thereof. Upon receipt of such policy or certificate, the director shall transmit it to the City Council.

Page intentionally left blank.

Exhibit 4

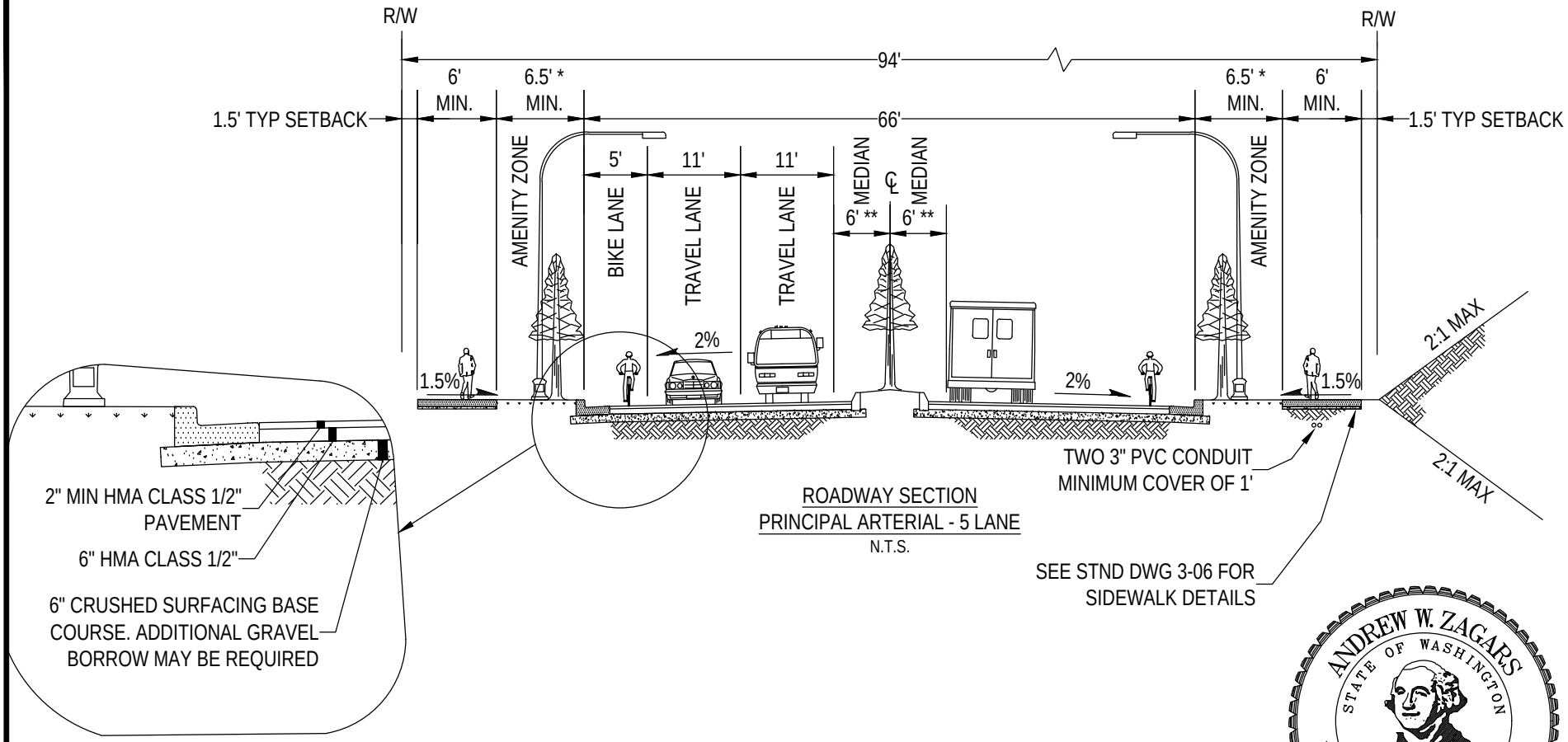

ROADWAY SECTION
PRINCIPAL ARTERIAL - 5 LANE
N.T.S.

Preliminary

11/09/2016 1:37:18 PM

NOTES:

1. NO ON-STREET PARKING PERMITTED.
2. SUBGRADE SHALL BE COMPACTED TO 95% INCLUDING UNDER CURB, GUTTER, AND SIDEWALK.
3. PROOF ROLL OF SUBGRADE MAY BE REQUIRED BY ENGINEER.
4. SIDEWALK WIDTH IS DETERMINED BY ADJACENT LANDUSE.

* MAY BE ELIMINATED OR WIDTH REDUCED WHERE THERE IS INSUFFICIENT RIGHT-OF-WAY OR CRITICAL AREAS, SUBJECT TO CITY ENGINEER'S APPROVAL.

** MAY BE REDUCED WHERE THERE IS INSUFFICIENT RIGHT-OF-WAY OR OTHER FACTORS, SUBJECT TO CITY ENGINEER'S APPROVAL. FACE OF MEDIAN CURB IS OFFSET ONE FOOT FROM TRAVEL LANE.

REV

CITY OF SAMMAMISH
DEPARTMENT OF PUBLIC WORKS

ROADWAY SECTION
PRINCIPAL ARTERIAL

APPROVED BY
CITY ENGINEER _____ DATE _____

DWN	CKD	DATE	FILE
TTC	AWZ	AUG-XX-2015	FIG01-01

REV. NO. X

Exhibit 4

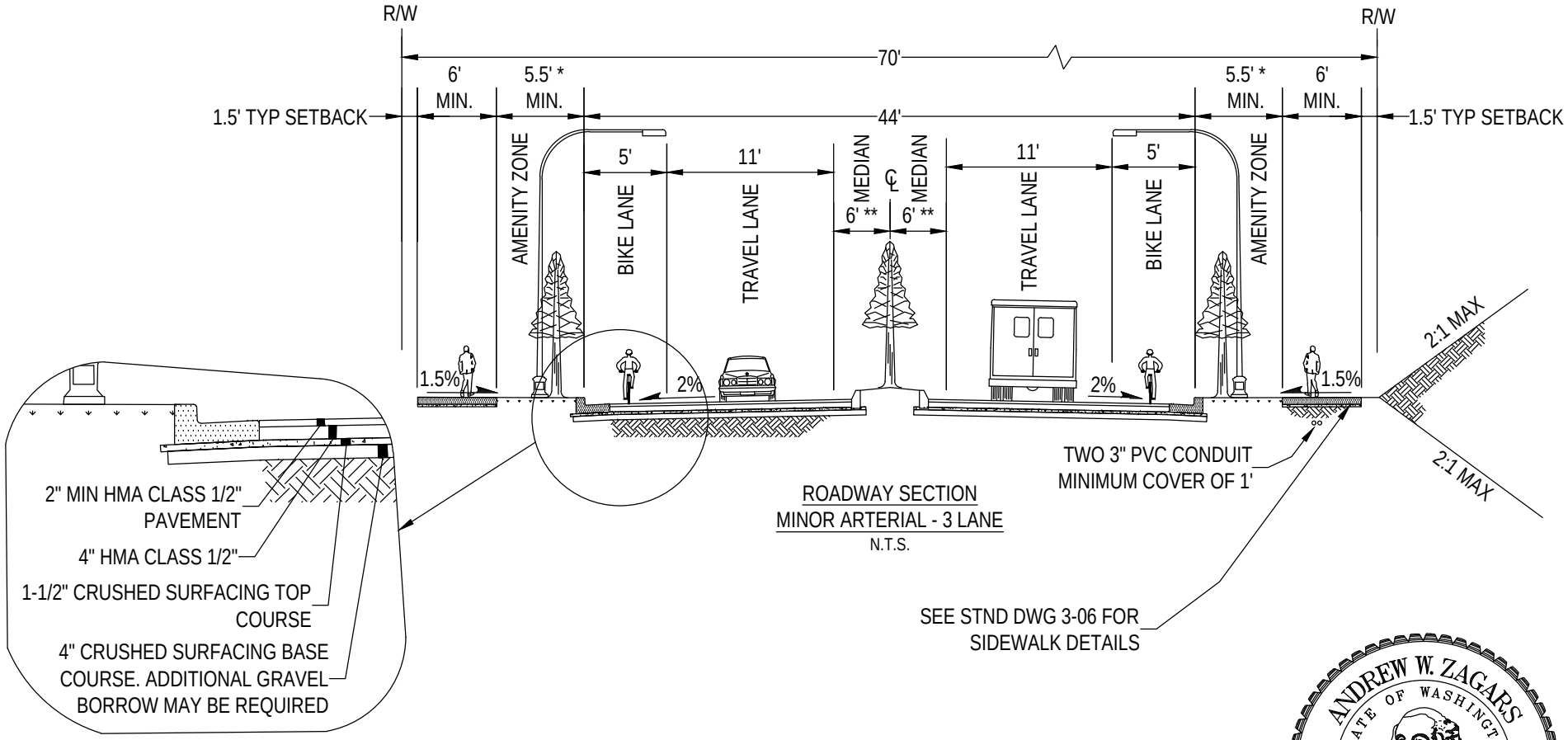

ROADWAY SECTION
MINOR ARTERIAL - 3 LANE
N.T.S.

NOTES:

1. WIDTH OF ROADWAY SECTION AND RIGHT-OF-WAY MAY BE INCREASED TO ALLOW PARKING.
2. SUBGRADE SHALL BE COMPACTED TO 95% INCLUDING UNDER CURB, GUTTER, AND SIDEWALK.
3. PROOF ROLL OF SUBGRADE MAY BE REQUIRED BY ENGINEER.
4. SIDEWALK WIDTH IS DETERMINED BY ADJACENT LANDUSE.

* MAY BE ELIMINATED OR WIDTH REDUCED WHERE THERE IS INSUFFICIENT RIGHT-OF-WAY OR CRITICAL AREAS, SUBJECT TO CITY ENGINEER'S APPROVAL.

** MAY BE REDUCED WHERE THERE IS INSUFFICIENT RIGHT-OF-WAY OR OTHER FACTORS, SUBJECT TO CITY ENGINEER'S APPROVAL. FACE OF MEDIAN CURB IS OFFSET ONE FOOT FROM TRAVEL LANE.

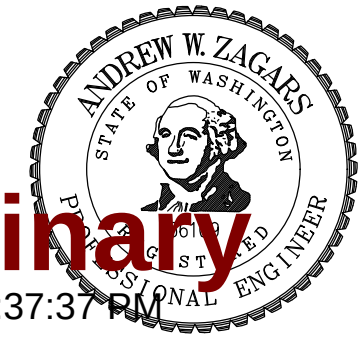

Preliminary

11/09/2016 1:37:37 PM

CITY OF SAMMAMISH
DEPARTMENT OF PUBLIC WORKS

ROADWAY SECTION
MINOR ARTERIAL

APPROVED BY
CITY ENGINEER _____ DATE _____

REV	DWN	CKD	DATE	FILE
	XXX	XXX	AUG-XX-2015	FIG01-02

REV. NO. X

Exhibit 4

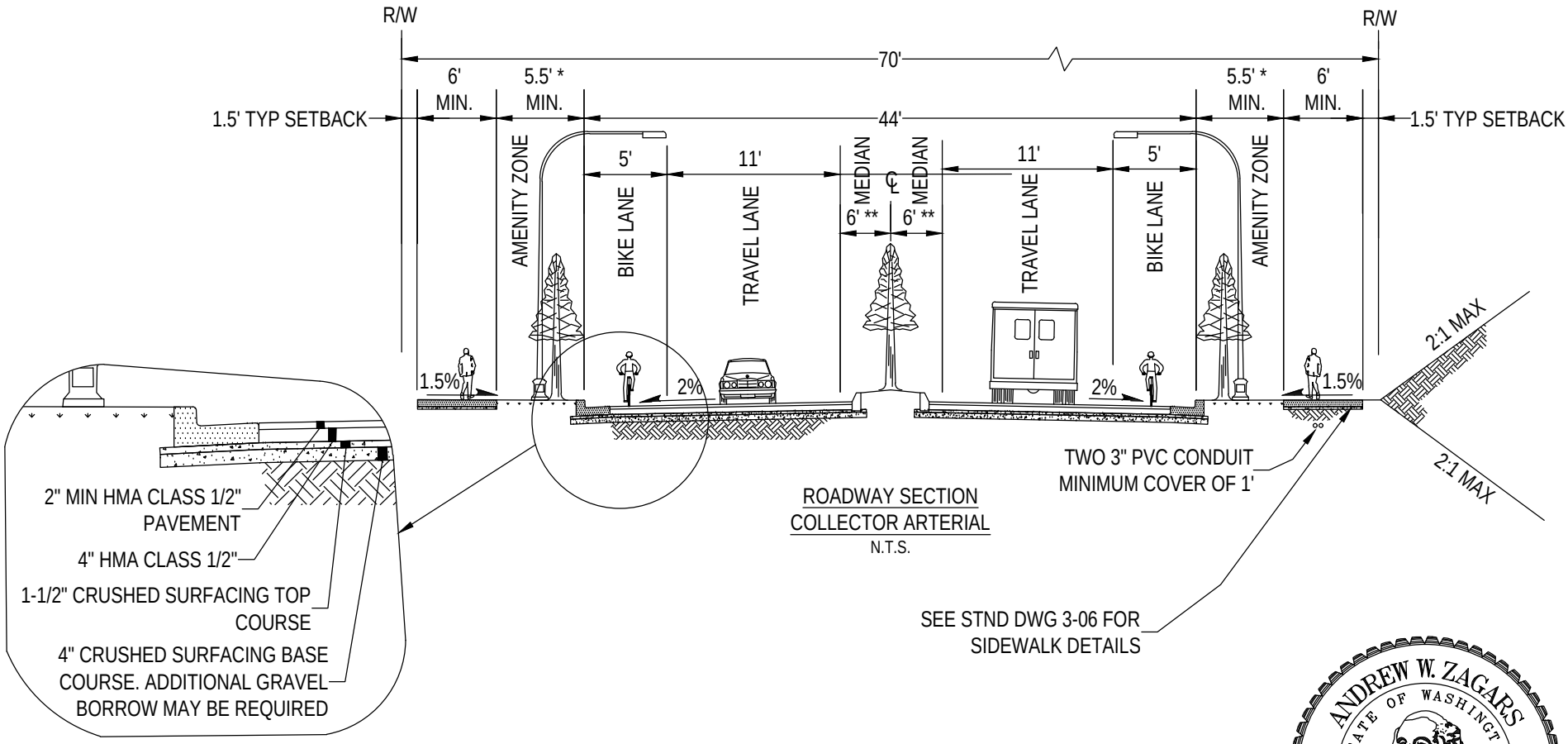

ROADWAY SECTION
COLLECTOR ARTERIAL
N.T.S.

NOTES:

1. WIDTH OF ROADWAY SECTION AND RIGHT-OF-WAY MAY BE INCREASED TO ALLOW PARKING.
2. SUBGRADE SHALL BE COMPACTED TO 95% INCLUDING UNDER CURB, GUTTER, AND SIDEWALK.
3. PROOF ROLL OF SUBGRADE MAY BE REQUIRED BY ENGINEER.
4. SIDEWALK WIDTH IS DETERMINED BY ADJACENT LANDUSE.

* MAY BE ELIMINATED OR WIDTH REDUCED WHERE THERE IS INSUFFICIENT RIGHT-OF-WAY OR CRITICAL AREAS, SUBJECT TO CITY ENGINEER'S APPROVAL.

** MAY BE REDUCED WHERE THERE IS INSUFFICIENT RIGHT-OF-WAY OR OTHER FACTORS, SUBJECT TO CITY ENGINEER'S APPROVAL. FACE OF MEDIAN CURB IS OFFSET ONE FOOT FROM TRAVEL LANE.

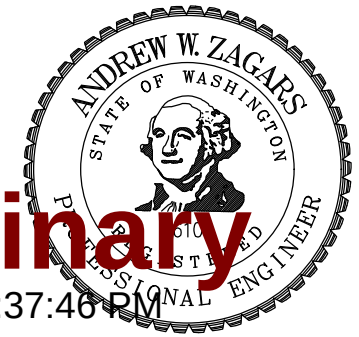

Preliminary

11/09/2016 1:37:46 PM

CITY OF SAMMAMISH
DEPARTMENT OF PUBLIC WORKS

ROADWAY SECTION
COLLECTOR ARTERIAL

APPROVED BY
CITY ENGINEER _____ DATE _____

REV	DWN	CKD	DATE	FILE
	XXX	XXX	AUG-XX-2015	FIG01-03

REV. NO. X

Exhibit 4

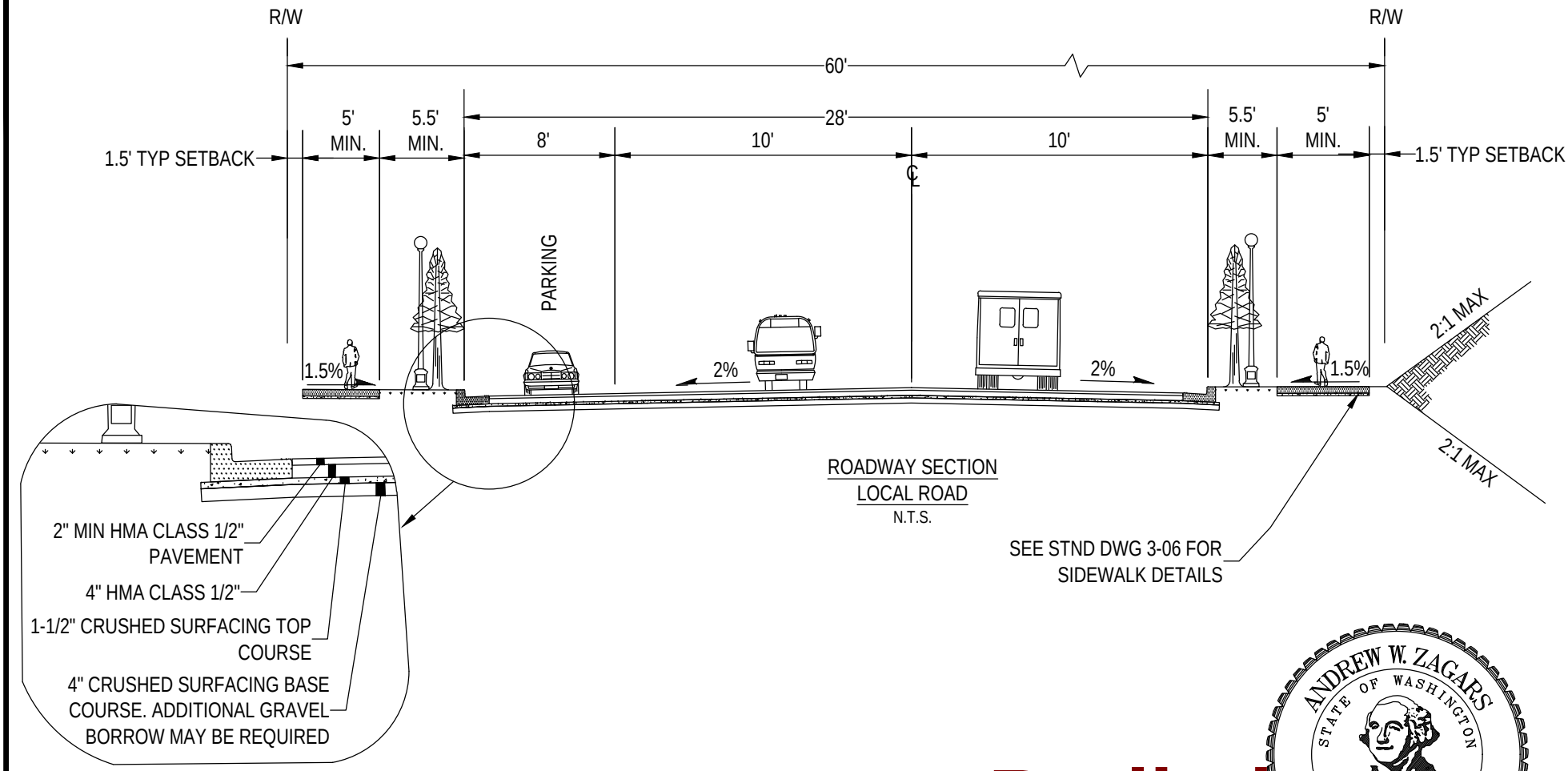

ROADWAY SECTION
LOCAL ROAD
N.T.S.

NOTES:

1. PARKING ON ONE SIDE OF ROAD ONLY. APPROVAL OF WHICH SIDE BY CITY ENGINEER.
2. PARKING LANE BASED ON TRAFFIC GENERATION.
3. INSTALL NO PARKING SIGNS ON ONE SIDE OF STREET PER DIRECTION OF ENGINEER.
4. SUBGRADE SHALL BE COMPACTED TO 95% INCLUDING UNDER CURB, GUTTER, AND SIDEWALK.
5. PROOF ROLL OF SUBGRADE MAY BE REQUIRED BY ENGINEER.
6. SIDEWALK WIDTH IS DETERMINED BY ADJACENT LANDUSE.

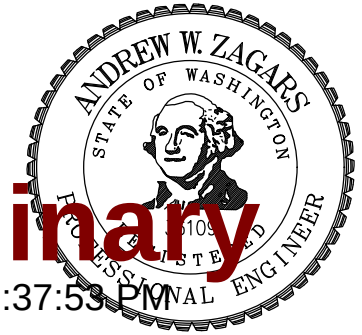

Preliminary

11/09/2016 1:37:53 PM

CITY OF SAMMAMISH
DEPARTMENT OF PUBLIC WORKS

ROADWAY SECTION
NON-ARTERIAL ROADWAY

APPROVED BY
CITY ENGINEER _____ DATE _____

REV	DWN	CKD	DATE	FILE
	XXX	XXX	AUG-XX-2015	FIG01-05

REV. NO. X

Exhibit 4

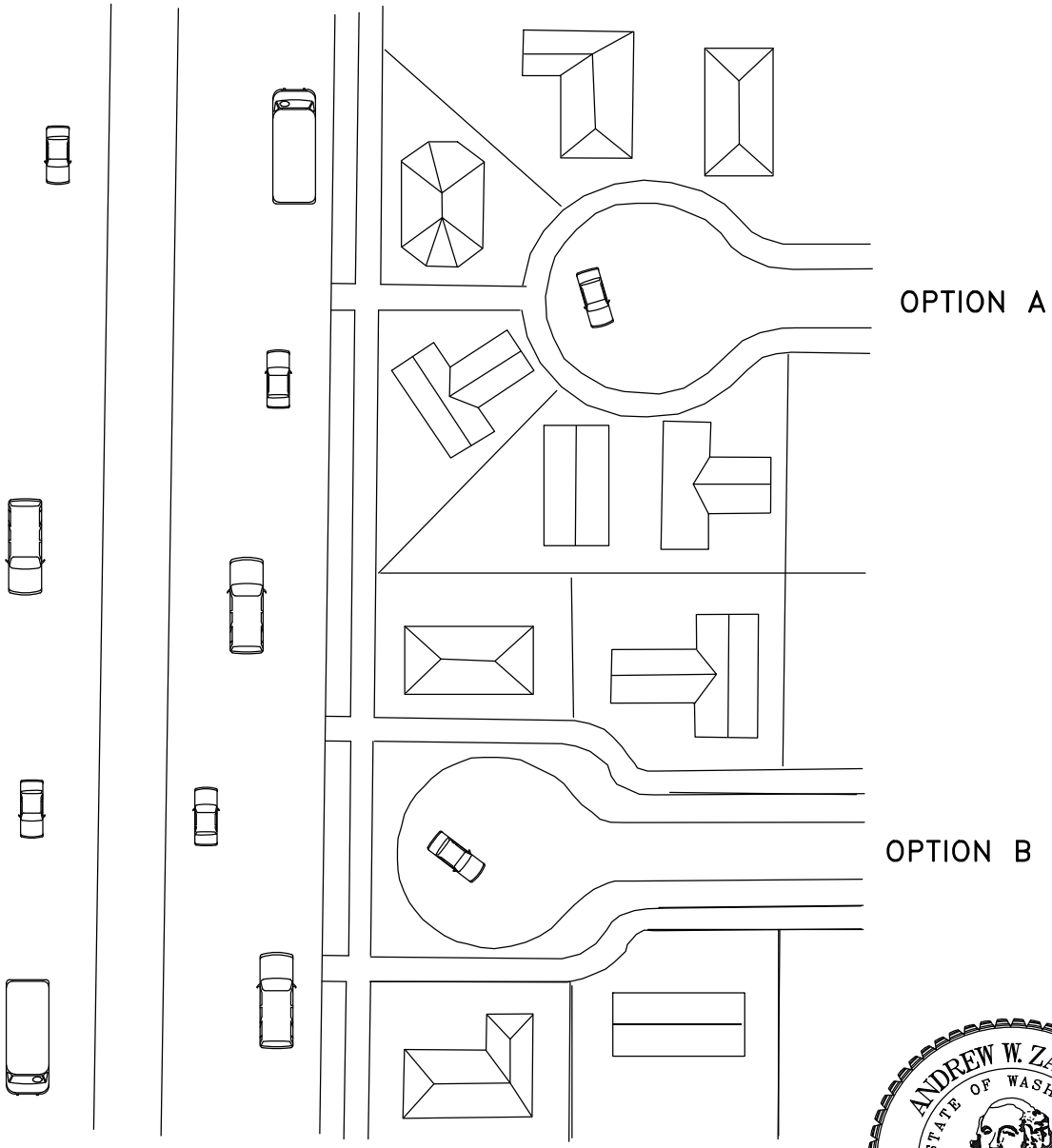

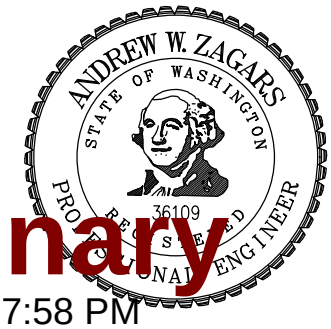

Preliminary

11/09/2016 1:37:58 PM

CITY OF SAMMAMISH DEPARTMENT OF PUBLIC WORKS			
PEDESTRIAN BIKE PATH CONNECTION BETWEEN THROUGH STREET AND CUL-DE-SAC			
APPROVED BY CITY ENGINEER _____ DATE _____			
REV	DWN XXX	CKD XXX	DATE AUG-XX-2015	FILE FIG01-06

REV. NO. X

Exhibit 4

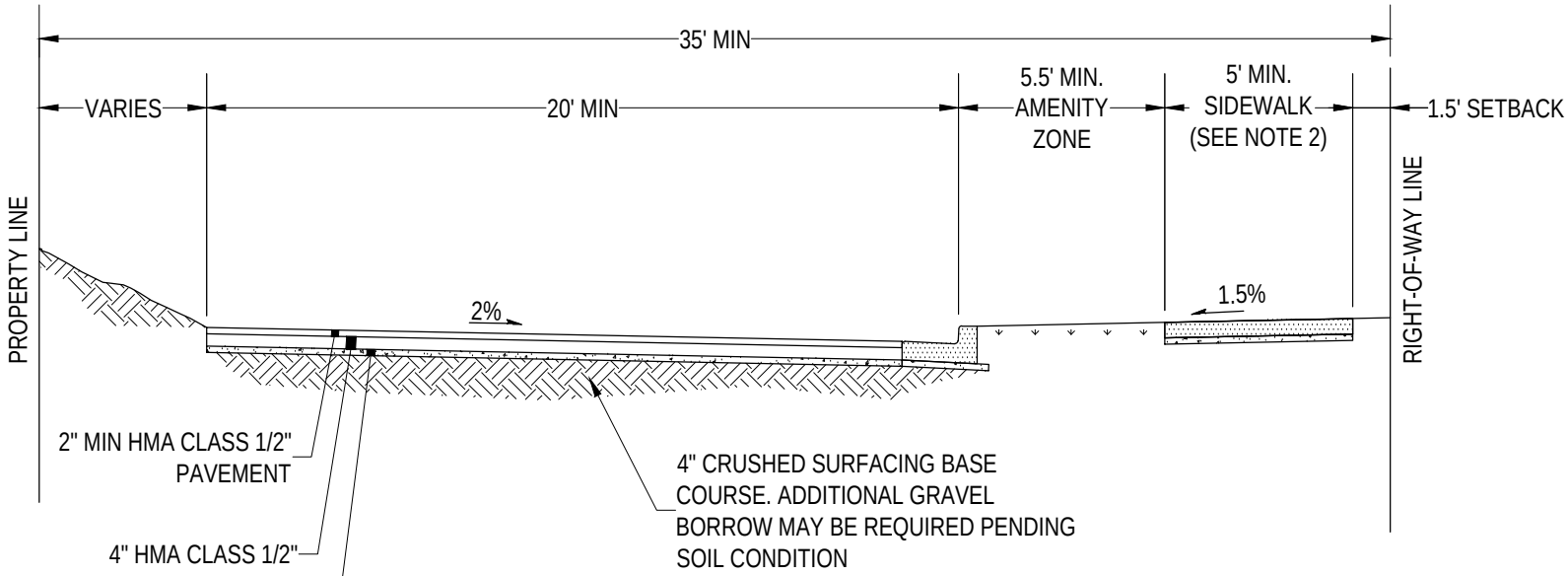

ROADWAY SECTION
HALF STREET

N.T.S.

NOTES:

1. EDGE OF PAVEMENT TO BE CONSTRUCTED AS SHOWN FOR CUT OR FILL SECTION AS APPROPRIATE.
2. SEE STND DWG 3-06 FOR SIDEWALK DETAILS.
3. PROOF ROLL OF SUBGRADE MAY BE REQUIRED BY ENGINEER.
4. IF PAVING SEAM IS REQUIRED, IT SHALL BE PLACED AT FUTURE CROWN LOCATION.
5. INSTALL NO PARKING SIGNS ON BOTH SIDE OF STREET PER DIRECTION OF ENGINEER.

Preliminary

11/09/2016 1:38:01 PM

ANDREW W. ZAGARS
STATE OF WASHINGTON
36
REGISTERED
PROFESSIONAL ENGINEER

CITY OF SAMMAMISH
DEPARTMENT OF PUBLIC WORKS

NON–ARTERIAL ROADWAY
SECTION HALF STREET

APPROVED BY
CITY ENGINEER _____ DATE _____

REV	DWN	CKD	DATE	FILE
	XXX	XXX	AUG–XX–2015	FIG01–07

REV. NO. X

Exhibit 4

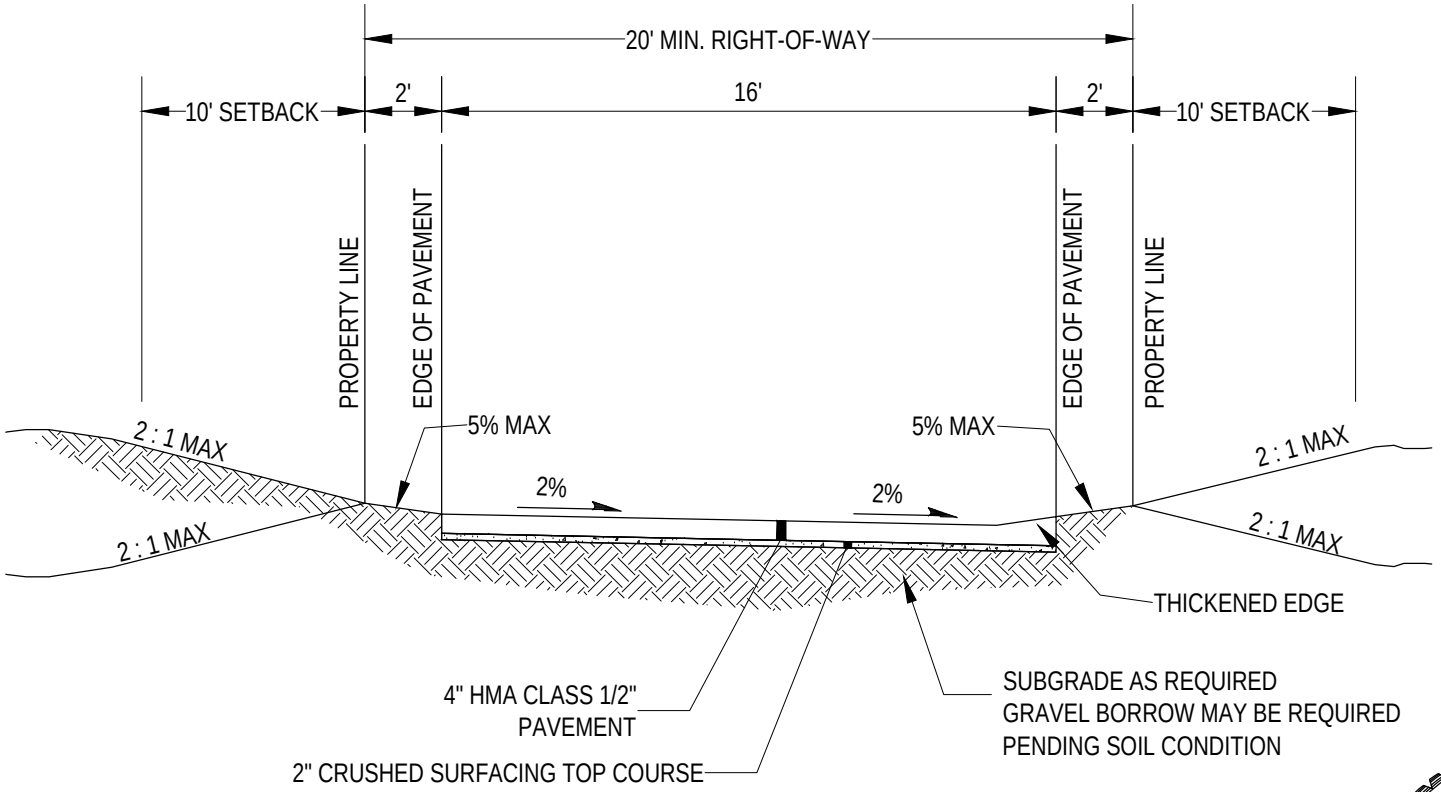

ROADWAY SECTION
TYPICAL ALLEY
N.T.S.

Preliminary

11/09/2016 1:38:04 PM

NOTES:
1. REFER TO PROVISIONS FOR REAR AND SIDE YARD SETBACKS IN DEVELOPMENT CODE.
2. DRAINAGE TO BE COLLECTED AT LOWER END OF ALLEY.
3. PROOF ROLL OF SUBGRADE MAY BE REQUIRED BY ENGINEER.
4. ALL UTILITY LIDS TO BE ADJUSTED TO GRADE.
5. FOR USE IN NEW DEVELOPMENT.
6. INSTALL NO PARKING SIGNS ON BOTH SIDE OF STREET PER DIRECTION OF ENGINEER.

CITY OF SAMMAMISH
DEPARTMENT OF PUBLIC WORKS

ROADWAY SECTION
TYPICAL ALLEY

APPROVED BY
CITY ENGINEER _____ DATE _____

REV	DWN	CKD	DATE	FILE
	XXX	XXX	AUG-XX-2015	FIG01-08

REV. NO. X

Exhibit 4

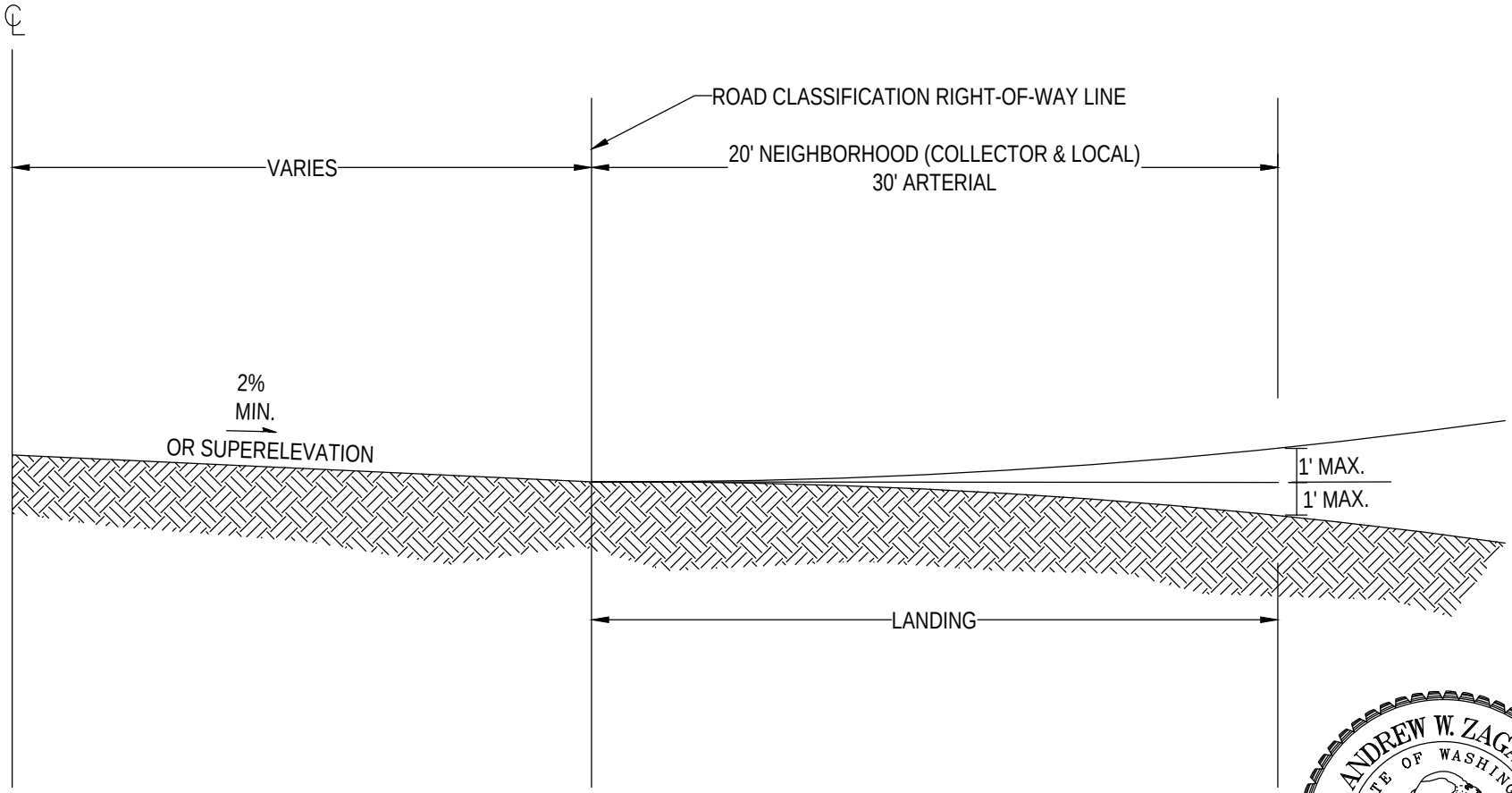

Preliminary

11/09/2016 1:38:07 PM

CITY OF SAMMAMISH
DEPARTMENT OF PUBLIC WORKS

INTERSECTION LANDING

APPROVED BY
CITY ENGINEER _____ DATE _____

REV	DWN	CKD	DATE	FILE
	TTC	AWZ	AUG-XX-2015	FIG02-01

REV. NO. X

Exhibit 4

A STREET WIDTH	B CURB RETURN RADIUS	C SET BACK DISTANCE	D CIRCLE DIAMETER	E OPENING WIDTH
20'	<15'	RECONSTRUCT CURBS		
	15'	5.5'	9'	16'+
	18'	5.0'	10'	17'+
	20'	4.5'	11'	18'-
	25'	4.0'	12'	19'+
24'	<12'	RECONSTRUCT CURBS		
	12'	5.5'	13'	16'+
	15'	5.0'	14'	17'-
	20'	4.5'	15'	18'+
	25'	3.5'	17'	20'-
25'	<12'	RECONSTRUCT CURBS		
	12'	5.5'	14'	16'+
	15'	5.0'	15'	17'-
	18'	4.5'	16'	18'-
	20'	4.5'	16'	18'+
	25'	3.5'	18'	20'-
30'	10'	5.5'	19'	16'+
	12'	5.0'	20'	17'-
	15'	5.0'	20'	17'+
	18'	4.5'	21'	18'+
	20'	4.0'	22'	19'+
	25'	3.0'	24'	20'
32'	10'	5.5'	21'	16'+
	12'	5.0'	22'	17'-
	15'	4.5'	23'	18'-
	18'	4.0'	24'	19'-
	20'	4.0'	24'	19'+
	25'	2.5'	27'	20'
36'	10'	5.0'	26'	17'-
	12'	5.0'	26'	17'+
	15'	4.5'	27'	18'+
	18'	4.0'	28'	19'+
	20'	3.5'	29'	20'-
	25'	1.5'	33'	20'
40'	10'	5.0'	30'	17'+
	12'	4.5'	31'	18'+
	15'	4.0'	32'	19'-
	18'	3.5'	33'	20'-
	20'	3.0'	34'	20'
	25'	1.0'	38'	20'

NOTE: "+" OR "-" DENOTES MINOR VARIATIONS

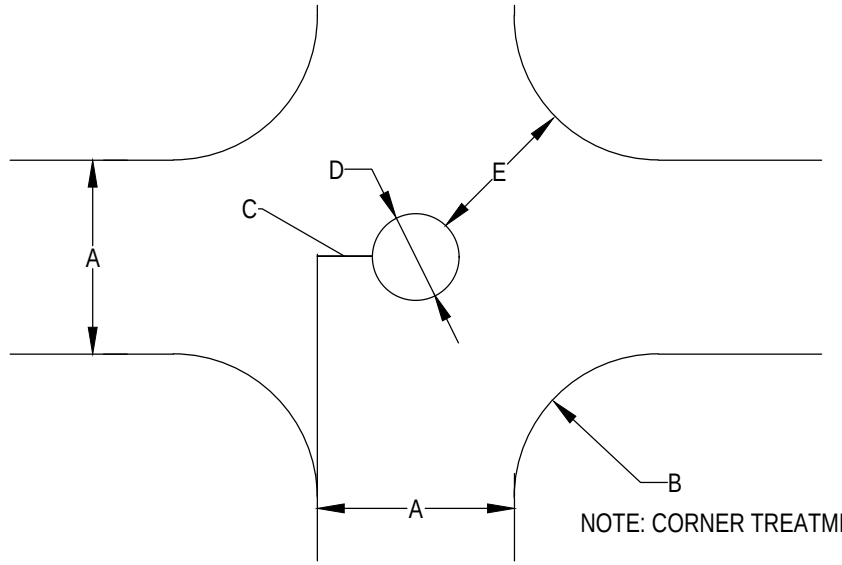

NOTE: CORNER TREATMENTS MAY BE REQUIRED.

INTERSECTION DIAGRAM

OPTIMUM CRITERIA

SET BACK DISTANCE	OPENING WIDTH
5.5' MAX	16' MIN.
5.0'	17' ±
4.5'	18' ±
4.0'	19' ±
3.5' OR LESS	20'

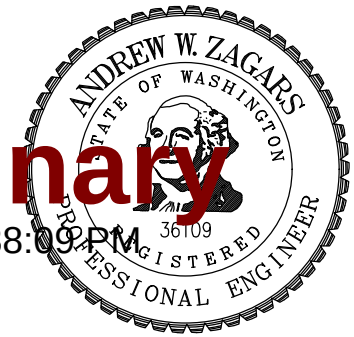

Preliminary

11/09/2016 1:38:09 PM

CITY OF SAMMAMISH
DEPARTMENT OF PUBLIC WORKS

TRAFFIC CIRCLE

APPROVED BY
CITY ENGINEER _____ DATE _____

REV	DWN	CKD	DATE	FILE
	TTC	AWZ	AUG-XX-2015	FIG02-02

REV. NO. X

Exhibit 4

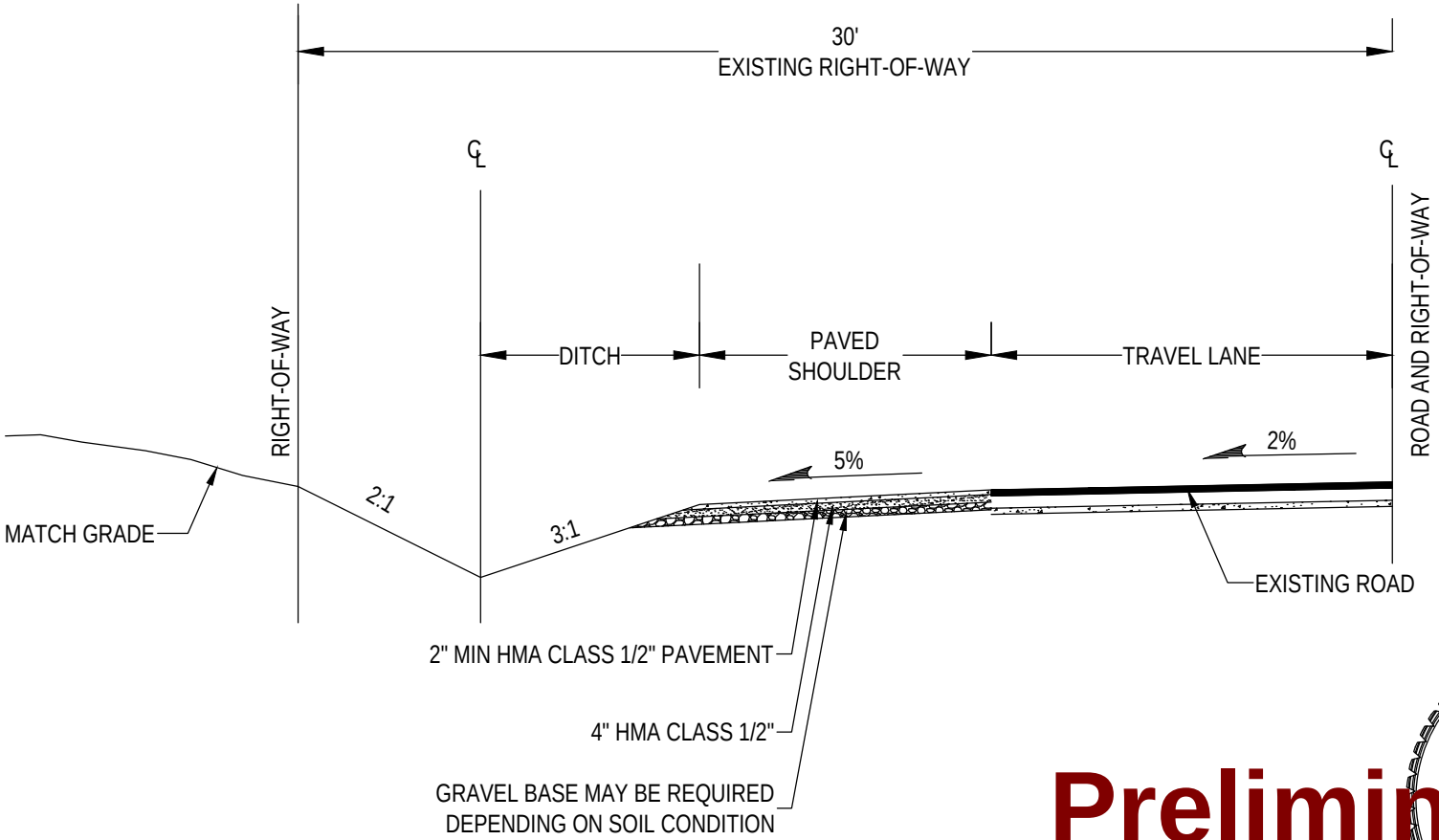

Preliminary

11/09/2016 1:38:12 PM

CITY OF SAMMAMISH
DEPARTMENT OF PUBLIC WORKS

SHOULDER TREATMENT

APPROVED BY
CITY ENGINEER _____ DATE _____

REV	DWN	CKD	DATE	FILE
	TTC	AWZ	AUG-XX-2015	FIG02-03

REV. NO. X

Exhibit 4

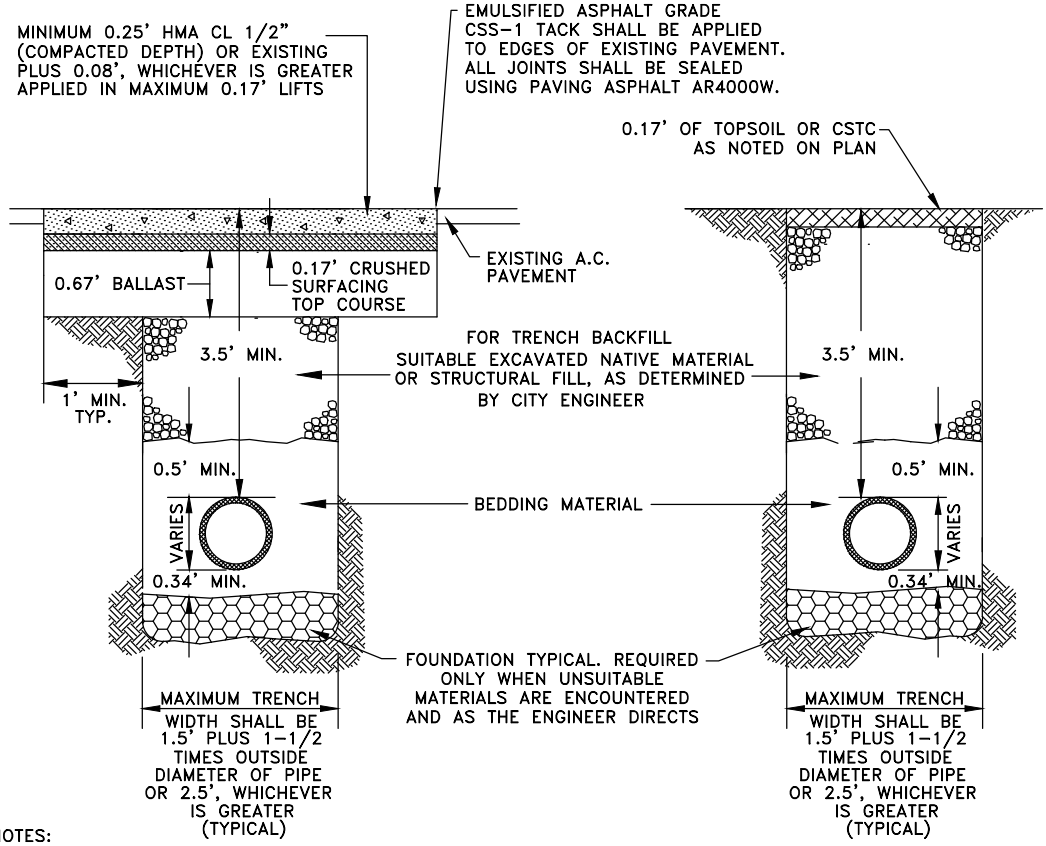

NOTES:

1. DIMENSIONS SHOWN ARE MINIMUM; GREATER THICKNESS MAY BE REQUIRED BY CITY ENGINEER.
2. ALL MATERIALS EXCEPT A.C.P. AND BEDDING MATERIAL SHALL BE COMPACTED IN 6-INCH MAXIMUM LIFTS TO 95% DENSITY.
3. BEDDING SHALL CONFORM TO SECTION 9-03.16 OF STANDARD SPECIFICATIONS.
4. COMPACTION: BEDDING SHALL BE COMPACTED TO 95% MAX. AS DETERMINED BY ASTM D1557. BACKFILL SHALL BE COMPACTED TO 85% IN UNPAVED AREA, AND 95% IN PAVED OR SHOULDER AREAS AS DETERMINED BY ASTM D1557.
5. ALL MATERIALS, WORKMANSHIP, AND INSTALLATION SHALL BE IN CONFORMANCE WITH THE LATEST VERSION OF WSDOT STANDARD SPECIFICATIONS FOR ROAD, BRIDGE AND MUNICIPAL CONSTRUCTION.
6. KEEP TRENCH BOTTOM COMPACTED WITH UNIFORM GRADE. A BELL JOINT SHALL BE REQUIRED AT EACH JOINT FOR PROPER SUPPORT. NO TEMPORARY SUPPORTS, I.E. BLOCKS, WILL BE ALLOWED TO SUPPORT PIPE. TRENCH BOTTOM SHALL BE TO GRADE PRIOR TO PIPE INSTALLATION.

Preliminary
11/09/2016 1:38:15 PM

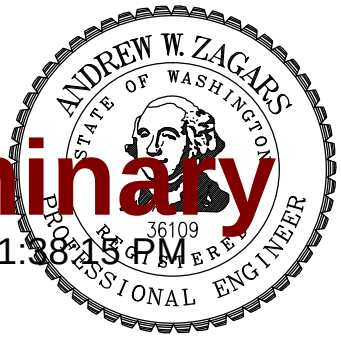

CITY OF SAMMAMISH
DEPARTMENT OF PUBLIC WORKS

TRENCH-PAVEMENT RESTORATION DETAIL

APPROVED BY
CITY ENGINEER _____ DATE _____

REV	DWN	CKD	DATE	FILE
	XXX	XXX	AUG-XX-2015	FIG02-05a

REV. NO. X

Exhibit 4

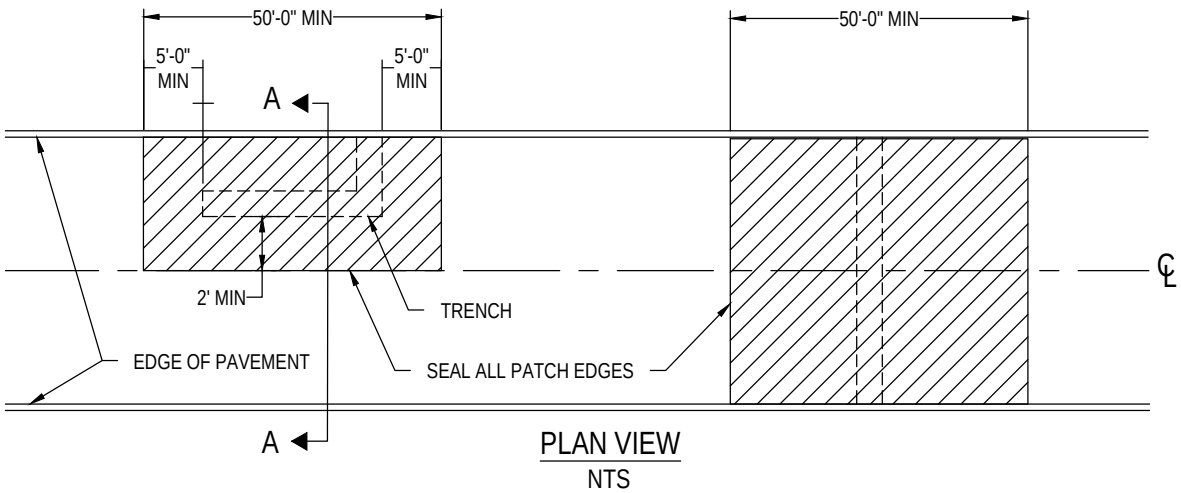

PLAN VIEW
NTS

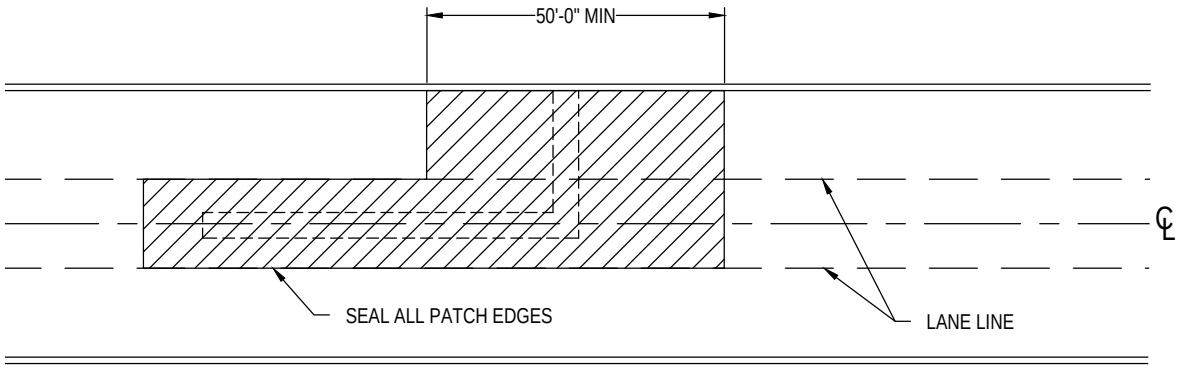

PLAN VIEW
NTS

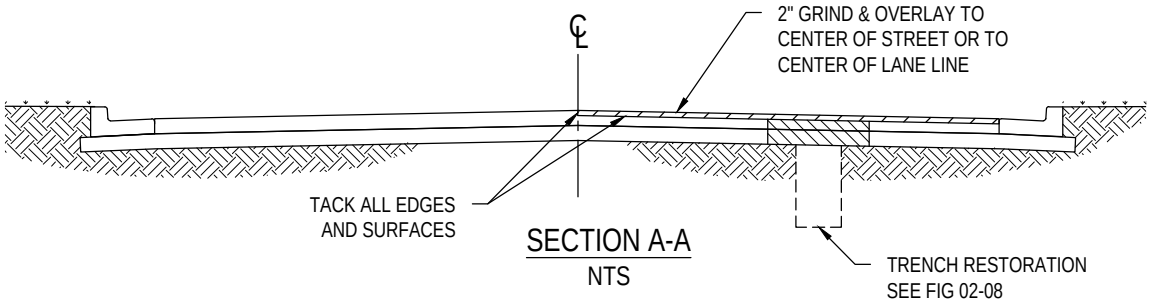

SECTION A-A
NTS

NOTES:

1. THIS DETAIL APPLIES TO ALL PAVEMENT CUTS.
2. DIMENSIONS SHOWN ARE MINIMUM. LIMITS MAY BE INCREASED TO MATCH NEARBY PAVING LIMITS OR OTHER PATCHES.
3. OVERLAY LIMITS MAY BE REDUCED BY CITY ON PAVEMENT IN FAIR CONDITION OR WORSE. SEE PAVEMENT CONDITION MAP FOR LOCATIONS.
4. REPAIR PAVEMENT PER WSDOT STANDARD SPECIFICATIONS SECTION 5-04.
5. HMA SHALL BE PLACED BY PAVERS MEETING THE REQUIREMENTS OF SECTION 5-04.3(3). ROLLERS SHALL MEET THE REQUIREMENTS OF SECTION 5-04.3(4)
6. LOWER ALL UTILITY CASTING PRIOR TO OVERLAY. ADJUST UTILITY CASTINGS TO FINISH GRADE AND RESTORE CHANNELIZATION AND LOOP DETECTORS.

Preliminary
11/09/2016 1:38:18 PM

CITY OF SAMMAMISH
DEPARTMENT OF PUBLIC WORKS

HMA PAVEMENT OVERLAY FOR TRENCH REPAIR

APPROVED BY
CITY ENGINEER _____ DATE _____

REV	DWN	CKD	DATE	FILE
	JG	XXX	AUG-XX-2015	FIG02-05b

REV. NO. X

Exhibit 4

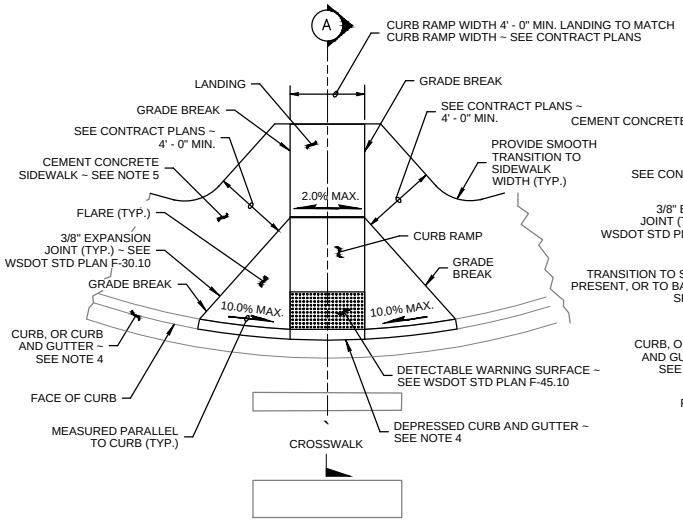

PLAN VIEW
TYPE PERPENDICULAR A

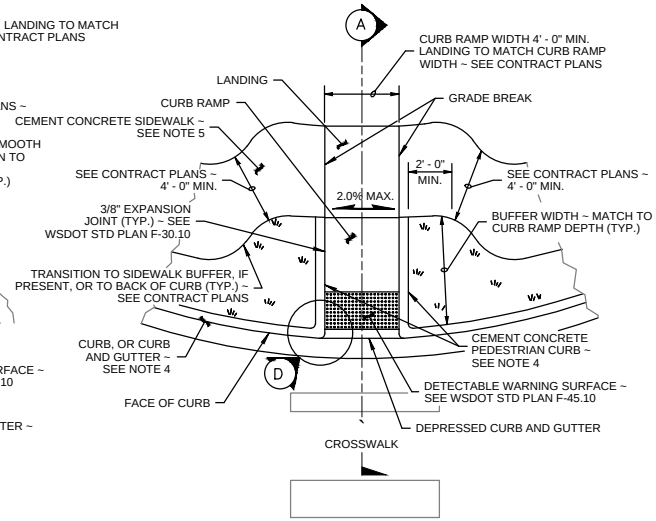

PLAN VIEW
TYPE PERPENDICULAR B
(SHOWN WITH BUFFER)

NOTES

1. Provide a separate Curb Ramp for each marked or unmarked crosswalk. Curb Ramp location shall be placed within the width of the associated crosswalk or as shown in the Contract Plans.
2. Where "GRADE BREAK" is called out, the entire length of the grade break between the two adjacent surface planes shall be flush.
3. Do not place Gratings, Junction Boxes, Access Covers, or other appurtenances in front of the Curb Ramp or on any part of the Curb Ramp or Landing.
4. See the Contract Plans for the curb design specified. See WSDOT STD Plan F-10.12 for Depressed Curb and Gutter, and Pedestrian Curb details.
5. See STD DWG 3-09 for Cement Concrete Sidewalk details. See Contract Plans for width and placement of sidewalk.
6. The Bid Item "Cement Concrete Curb Ramp Type __" does not include the adjacent Curb, Curb and Gutter, Depressed Curb and Gutter, Pedestrian Curb, or Sidewalk.
7. The Curb Ramp maximum running slope shall not require the ramp length to exceed 15-feet to avoid chasing the slope indefinitely when connecting to steep grades. When applying the 15-foot maximum length, the running slope of the Curb Ramp shall as flat as feasible.
8. Curb Ramp, Landing, and Flares shall receive broom finish. See WSDOT STD Specifications 8-14.

LEGEND

SLOPE IN EITHER DIRECTION

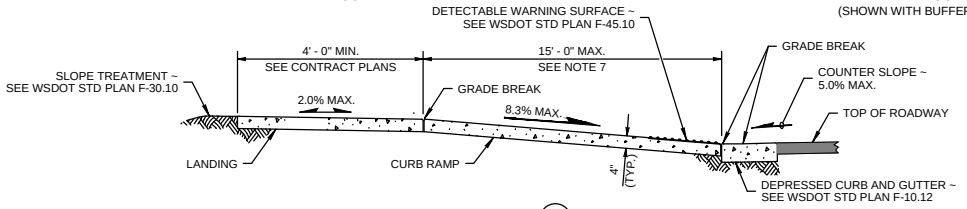

SECTION A

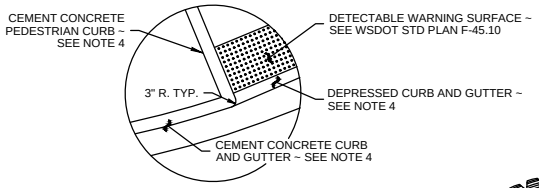

CURB RADIUS DETAIL D

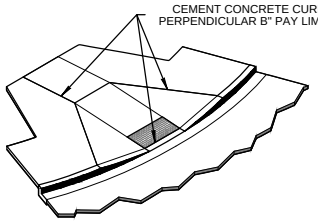

ISOMETRIC VIEW
TYPE PERPENDICULAR A PAY LIMIT

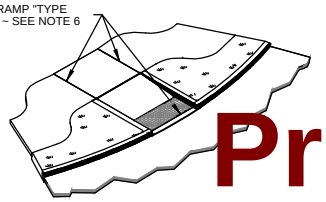

ISOMETRIC VIEW
TYPE PERPENDICULAR B PAY LIMIT

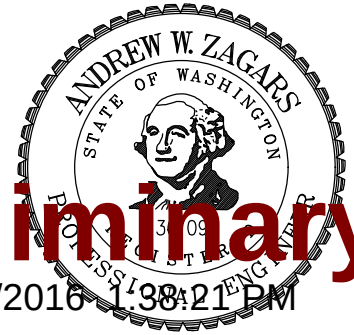

Preliminary
11/09/2016 1:38:21 PM

CITY OF SAMMAMISH
DEPARTMENT OF PUBLIC WORKS

PERPENDICULAR CURB RAMP

APPROVED BY
CITY ENGINEER _____ DATE _____

REV	DWN	CKD	DATE	FILE
	XXX	XXX	AUG-XX-2015	FIG02-06

REV. NO. X

Exhibit 4

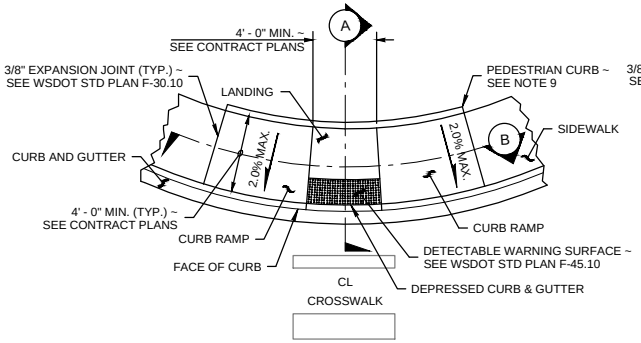

PLAN VIEW
TYPE PARALLEL A

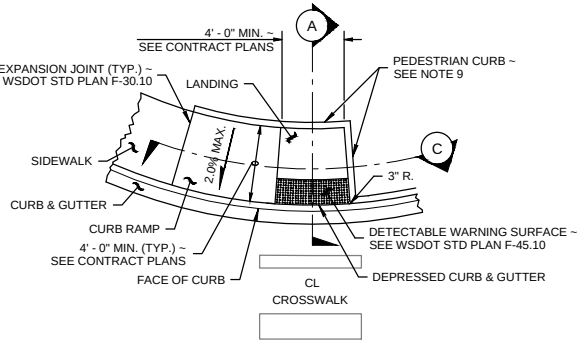

PLAN VIEW
TYPE PARALLEL B

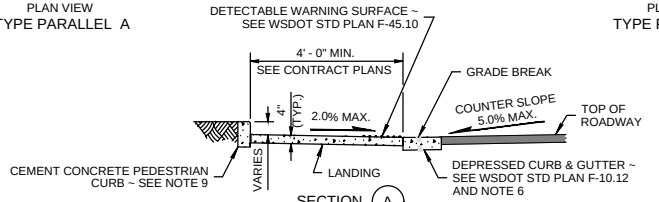

SECTION A

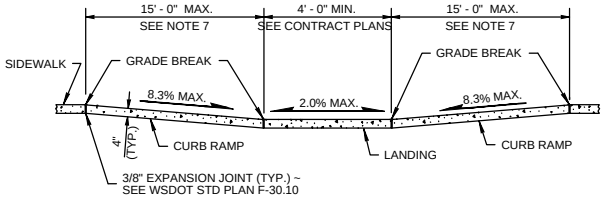

SECTION B

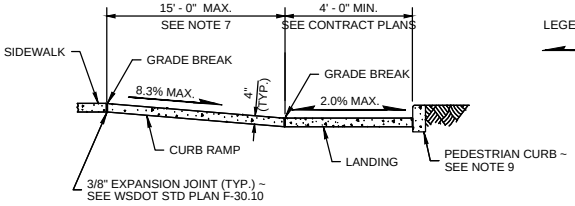

SECTION C

LEGEND

SLOPE IN EITHER DIRECTION

NOTES

1. Provide a separate Curb Ramp for each marked or unmarked crosswalk. Curb Ramp location shall be placed within the width of the associated crosswalk, or as shown in the Contract Plans.
2. Where "GRADE BREAK" is called out, the entire length of the grade break between the two adjacent surface planes shall be flush.
3. Do not place Gratings, Junction Boxes, Access Covers, or other appurtenances in front of the Curb Ramp or on any part of the Curb Ramp or Landing.
4. See Contract Plans for the curb design specified. See WSDOT STD Plan F-10.12 for Depressed Curb and Gutter, and Pedestrian Curb details.
5. See STD DWG 3-09 for Cement Concrete Sidewalk Details. See Contract Plans for width and placement of sidewalk.
6. The Bid Item "Cement Concrete Curb Ramp Type __" does not include the adjacent Curb, Curb and Gutter, Depressed Curb and Gutter, Pedestrian Curb, or Sidewalks.
7. The Curb Ramp maximum running slope shall not require the ramp length to exceed 15 feet to avoid chasing the slope indefinitely when connecting to steep grades. When applying the 15-foot max. length, the running slope of the curb ramp shall be as flat as feasible.
8. Curb Ramp, Landing, and Flares shall receive broom finish. See WSDOT STD Specifications 8-14.
9. Pedestrian Curb may be omitted if the ground surface at the back of the Curb Ramp and/or Landing will be at the same elevation as the Curb Ramp or Landing and there will be no material to retain.

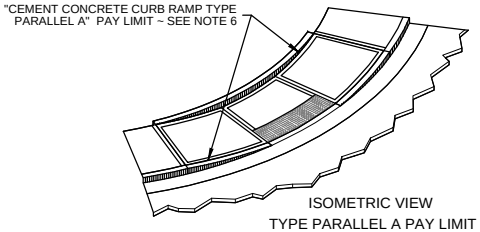

ISOMETRIC VIEW
TYPE PARALLEL A PAY LIMIT

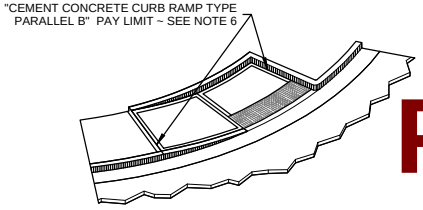

ISOMETRIC VIEW
TYPE PARALLEL B PAY LIMIT

Preliminary

11/09/2016 1:38:25 PM

CITY OF SAMMAMISH
DEPARTMENT OF PUBLIC WORKS

PARALLEL CURB RAMP

APPROVED BY
CITY ENGINEER _____ DATE _____

REV	DWN	CKD	DATE	FILE
	XXX	XXX	AUG-XX-2015	FIG02-07

REV. NO. X

Exhibit 4

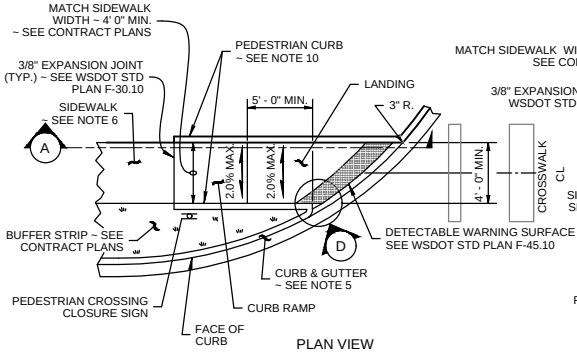

PLAN VIEW
TYPE SINGLE DIRECTION A

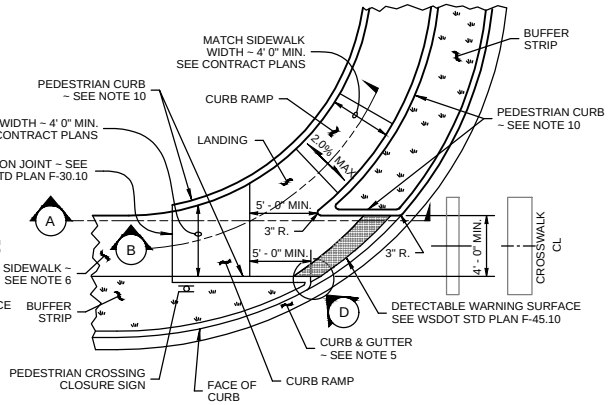

PLAN VIEW
TYPE SINGLE DIRECTION B

NOTES

1. This plan is to be used where pedestrian crossing in one direction is not permitted.
2. Curb ramp location shall be placed within the width of the associated crosswalk, or as shown in the Contract Plans.
3. Where "GRADE BREAK" is called out, the entire length of the grade break between the two adjacent surface planes shall be flush.
4. Do not place gratings, junction boxes, access covers or other appurtances in front of the curb ramp or on any part of the curb ramp or landing.
5. See the Contract Documents for the curb design specified. See WSDOT STD Plan F-10.12 for Depressed Curb and Gutter and Pedestrian Curb details.
6. See STD DWG 3-09 for Cement Concrete Sidewalk Details. See contract plans for width and placement of sidewalk.
7. The bid item "Cement Concrete Curb Ramp Type __" does not include the adjacent Curb or (Curb and Gutter), Depressed Curb and Gutter, Pedestrian Curb or Sidewalk, or the pedestrian crossing closure sign.
8. The curb ramp maximum running slope shall not require the ramp length to exceed 15 feet to avoid chasing the slope indefinitely when connecting to steep grades. When applying the 15 foot maximum length, the running slope of the curb ramp shall be as flat as feasible.
9. Curb ramps and landings shall receive broom finish. See WSDOT STD Specifications 8-14.
10. Pedestrian Curb may be omitted if the ground surface at the back of the Curb Ramp and/or landing will be at the same elevation as the Curb Ramp or Landing and there will be no material to retain.

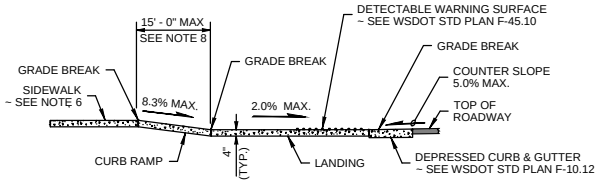

SECTION A

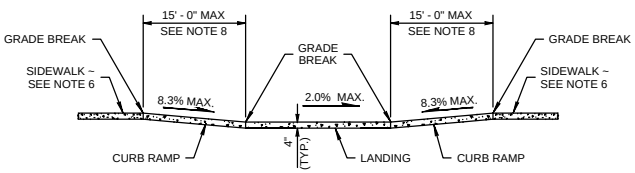

SECTION B

LEGEND

SLOPE IN EITHER DIRECTION

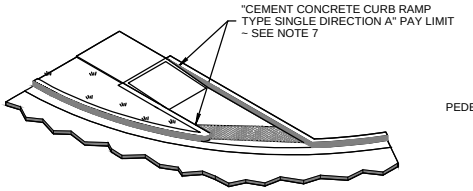

ISOMETRIC VIEW
TYPE SINGLE DIRECTION A
PAY LIMIT

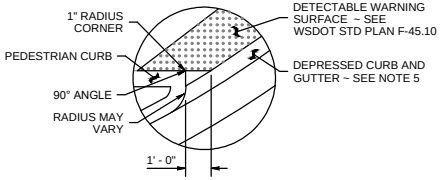

DETAIL D

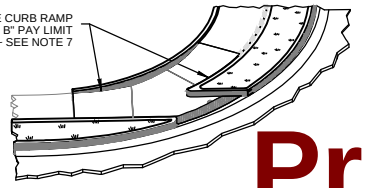

ISOMETRIC VIEW
TYPE SINGLE DIRECTION B
PAY LIMIT

Preliminary

11/09/2016 1:38:30 PM

CITY OF SAMMAMISH
DEPARTMENT OF PUBLIC WORKS

SINGLE DIRECTION
CURB RAMP

APPROVED BY
CITY ENGINEER _____ DATE _____

REV	DWN	CKD	DATE	FILE
	XXX	XXX	AUG-XX-2015	FIG02-08

REV. NO. X

Exhibit 4

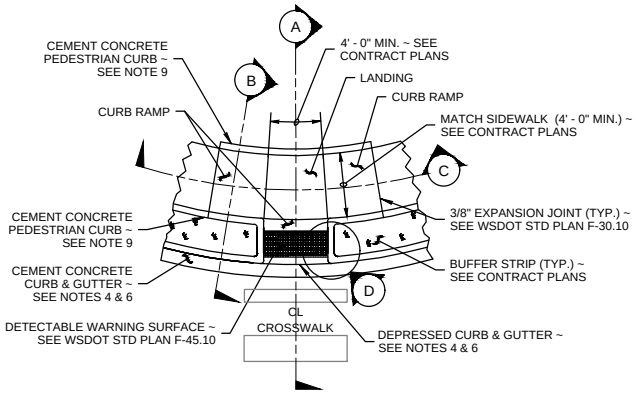

PLAN VIEW
TYPE COMBINATION
WITH BUFFER

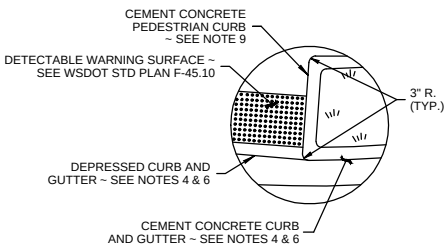

DETAIL D

CURB RADIUS DETAIL

NOTES

1. Provide a separate Curb Ramp for each marked or unmarked crosswalk. Curb Ramp location shall be placed within the width of the associated crosswalk or as shown in the Contract Plans.
2. Where "GRADE BREAK" is called out, the entire length of the grade break between the two adjacent surface planes shall be flush.
3. Do not place Gratings, Junction Boxes, Access Covers, or other appurtenances in front of the Curb Ramp or on any part of the Curb Ramp or Landing.
4. See Contract Plans for the curb design specified. See WSDOT STD Plan F-10.12 for Depressed Curb, Gutter and Pedestrian Curb details.
5. See STD DWG 3-09 for Cement Concrete Sidewalk Details. See Contract Plans for width and placement of sidewalk.
6. The Bid Item "Cement Concrete Curb Ramp Type __" does not include the adjacent Curb, Curb and Gutter, Depressed Curb and Gutter, Pedestrian Curb, or Sidewalks.
7. The Curb Ramp maximum running slope shall not require the ramp length to exceed 15 feet to avoid chasing the slope indefinitely when connecting to steep grades. When applying the 15-foot max. length, the running slope of the Curb Ramp shall be as flat as feasible.
8. Curb Ramp, Landing and Flares shall receive broom finish. See WSDOT STD Specifications 8-14.
9. Pedestrian Curb may be omitted if the ground surface at the back of the Curb Ramp and/or Landing will be at the same elevation as the Curb Ramp or Landing and there will not be material to retain.

LEGEND

SLOPE IN EITHER DIRECTION

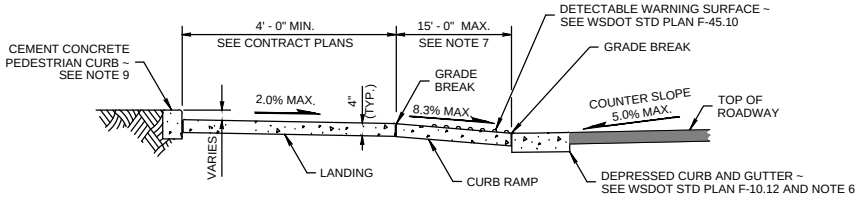

SECTION A

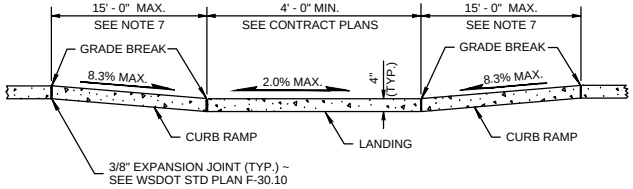

SECTION C

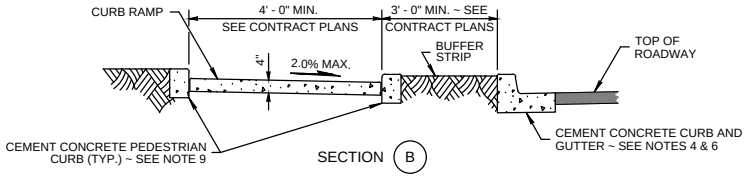

SECTION B

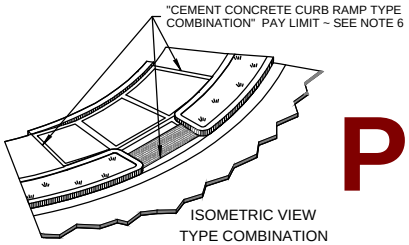

ISOMETRIC VIEW
TYPE COMBINATION
PAY LIMIT

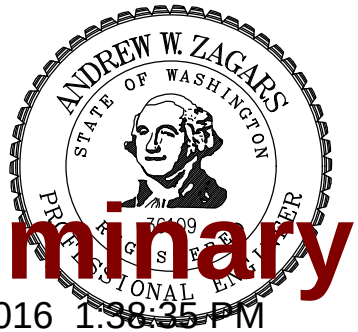

Preliminary

11/09/2016 1:38:35 PM

CITY OF SAMMAMISH
DEPARTMENT OF PUBLIC WORKS

COMBINATION CURB RAMP

APPROVED BY
CITY ENGINEER _____ DATE _____

REV	DWN	CKD	DATE	FILE
	XXX	XXX	AUG-XX-2015	FIG02-09

REV. NO. X

Exhibit 4

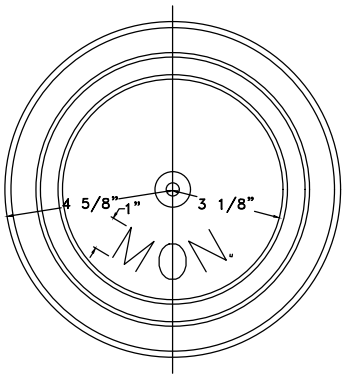

PLAN OF COVER

NOTES:

THE CASTINGS SHALL BE GRAY-IRON CASTINGS, ASTM DESIGNATION A 48, CLASS 40. THE COVER AND SEAT SHALL BE MACHINED SO AS TO HAVE PERFECT CONTACT AROUND THE ENTIRE CIRCUMFERENCE AND FULL WIDTH OF BEARING SURFACE.

WHEN THE MONUMENT CASE AND COVER ARE PLACED IN CEMENT CONCRETE PAVEMENT THE CONCRETE BASE WILL BE NECESSARY.

APPROXIMATE WEIGHTS:

CASE	60 LBS.
COVER	19 LBS.
TOTAL	79 LBS.

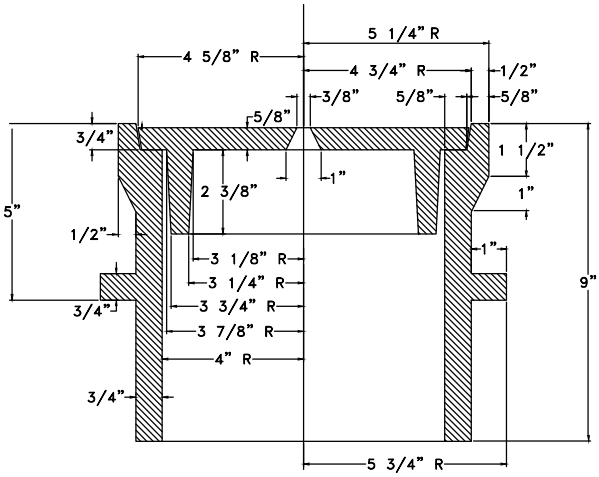

SECTION

PLAN

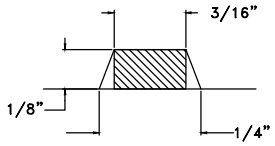

SECTION OF LETTER

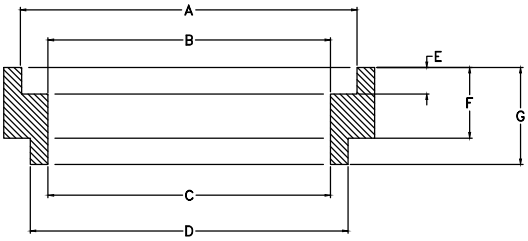

SECTION A-A

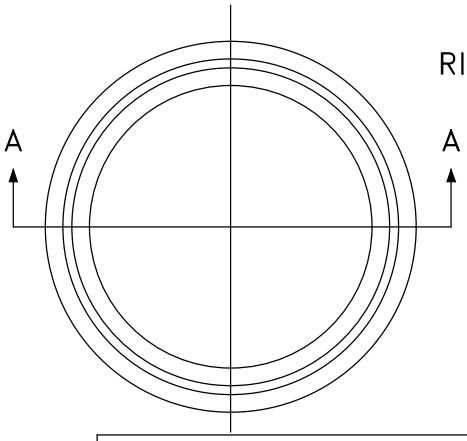

RISER RING

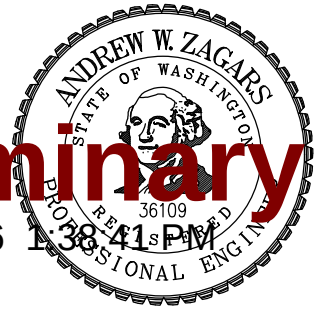

Preliminary
11/09/2016 1:38:41 PM

SIZE			
DIM	1-1/2"	2"	3"
A	10-1/2"	10-1/2"	10-1/2"
B	9-1/2"	9-1/2"	9-1/2"
C	8"	8"	8"
D	9"	9"	9"
E	3/4"	3/4"	3/4"
F	1-1/2"	2"	3"
G	2-1/4"	2-3/4"	3-3/4"

CITY OF SAMMAMISH
DEPARTMENT OF PUBLIC WORKS

MONUMENT CASE AND COVER WITH RISER

APPROVED BY
CITY ENGINEER _____ DATE _____

REV	DWN	CKD	DATE	FILE
	XXX	XXX	AUG-XX-2015	FIG02-11a

REV. NO. X

Exhibit 4

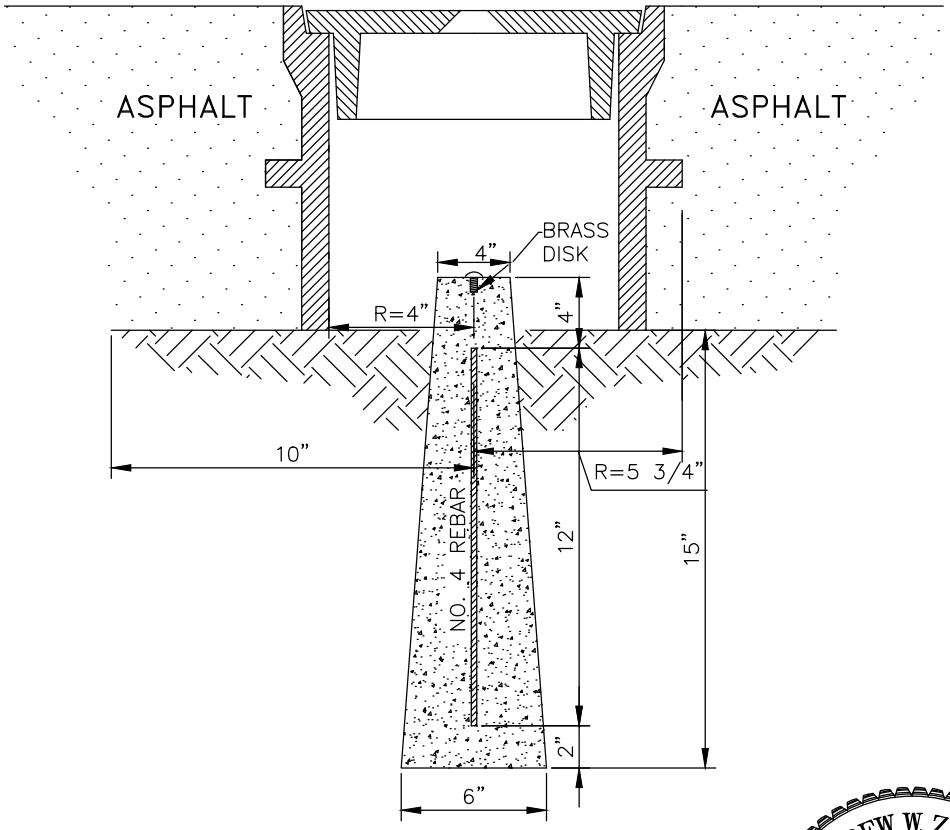

SECTION

Preliminary
11/09/2016 1:38:44 PM

NOTES

1. ASPHALT SHOULD BE PLACED IN LIFTS NO LARGER THAN 4”.
2. MINIMUM ULTIMATE COMPRESSIVE STRENGTH OF CONCRETE CASTING AT 28 DAYS – 3000#.

CITY OF SAMMAMISH
DEPARTMENT OF PUBLIC WORKS

MONUMENT CASE AND COVER

APPROVED BY
CITY ENGINEER _____ DATE _____

REV	DWN	CKD	DATE	FILE
	XXX	XXX	AUG-XX-2015	FIG02-11b

REV. NO. X

Exhibit 4

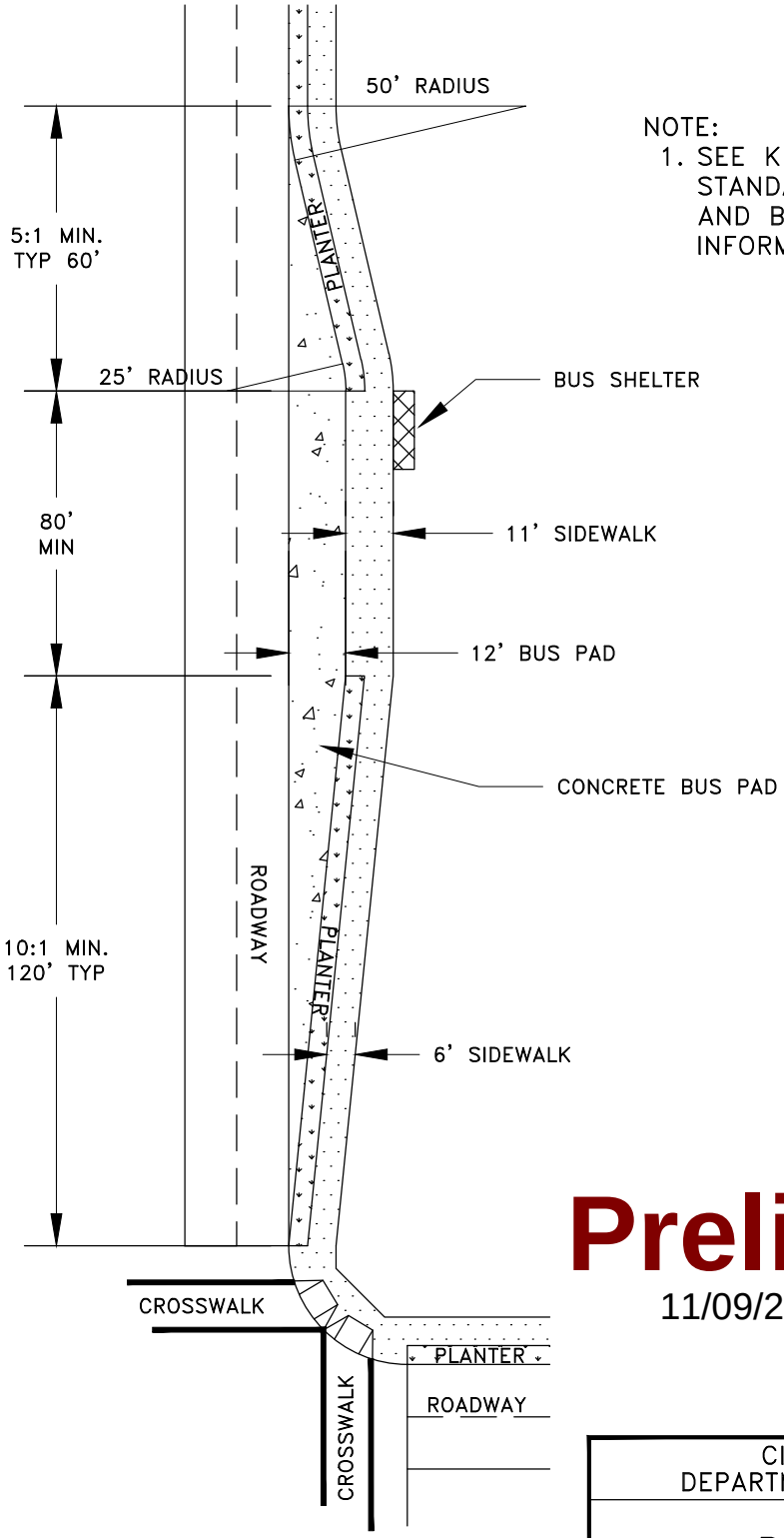

NOTE:
1. SEE KING COUNTY METRO STANDARDS FOR BUS PAD AND BUS SHELTER INFORMATION

Preliminary

11/09/2016 1:38:47 PM

CITY OF SAMMAMISH
DEPARTMENT OF PUBLIC WORKS

BUS TURNOUT

APPROVED BY
CITY ENGINEER _____ DATE _____

REV	DWN	CKD	DATE	FILE
	XXX	XXX	AUG-XX-2015	FIG02-14

REV. NO. X

Exhibit 4

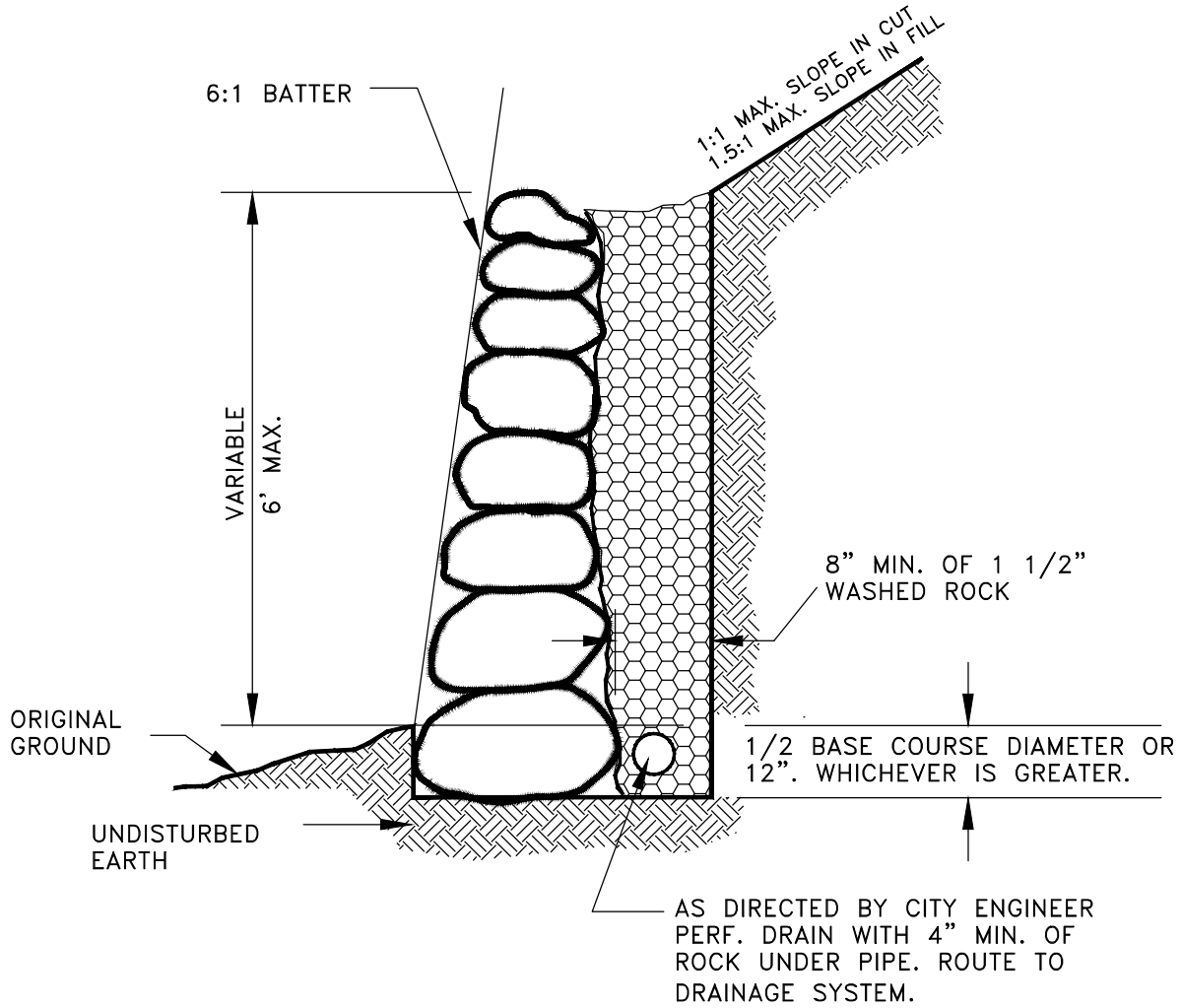

GENERAL NOTES:

1. Rockeries higher than 5' shall be constructed of rocks of graduated sizes from 5-man to 2-man from bottom to top. Rockeries of 5' or lower shall be constructed of 3-man to 2-man from bottom to top. Rock size catagories shall include:

   Two-man rocks (300 to 600 pounds), 13 inches in least dimension;

   Three-man rocks (800 to 1200 pounds), 16 inches in least dimension;

   Four-man rocks (1500 to 2200 pounds), 18 inches in least dimension;

   Five-man rocks (2400 to 3400 pounds), 24 inches in least dimension.
2. The rockery shall be installed with a smooth face.
3. The long dimension of the rocks shall extend into the earth to provide maximum stability.
4. The rock shall be placed so as to lock into two rocks in the lower tier.
5. Call for inspection prior to base course being placed (for verification of rockery height, foundation material and rock size).
6. Design varying from those indicated shall carry the seal of a civil or geotechnical engineer experienced in soil mechanics.

Preliminary
11/09/2016 1:38:49 PM

ANDREW W. ZAGARS
STATE OF WASHINGTON
36109
REGISTERED
PROFESSIONAL ENGINEER

CITY OF SAMMAMISH
DEPARTMENT OF PUBLIC WORKS

ROCK RETAINING WALL

APPROVED BY
CITY ENGINEER _____ DATE _____

REV	DWN	CKD	DATE	FILE
	XXX	XXX	AUG-XX-2015	FIG02-15

REV. NO. X

Exhibit 4

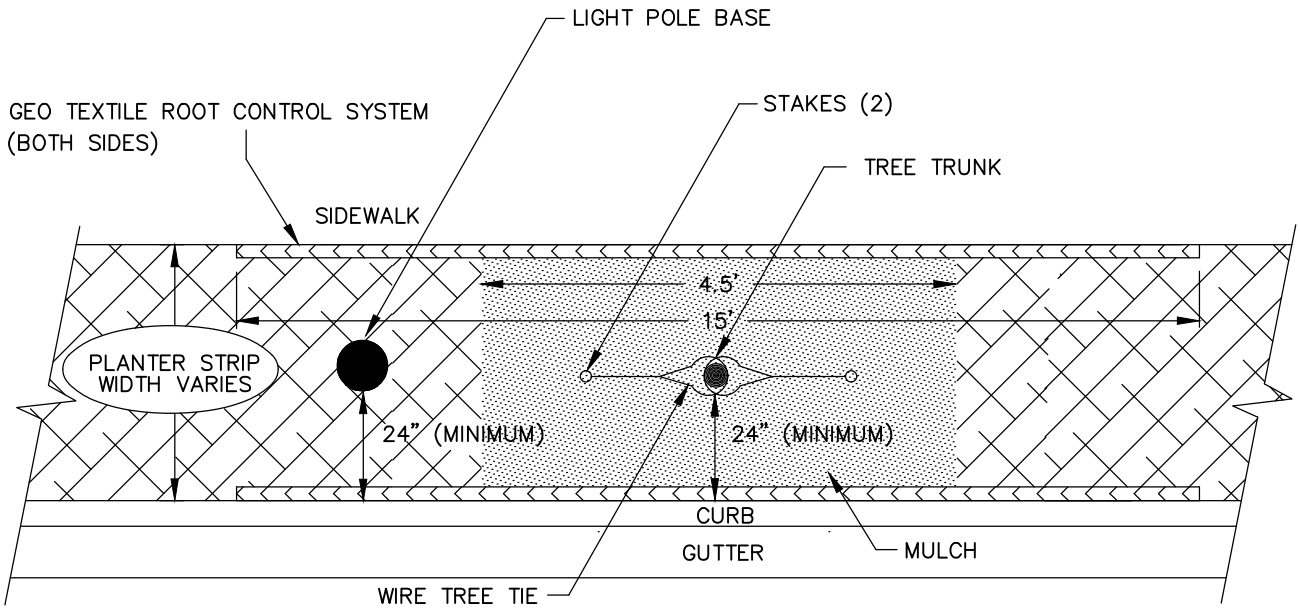

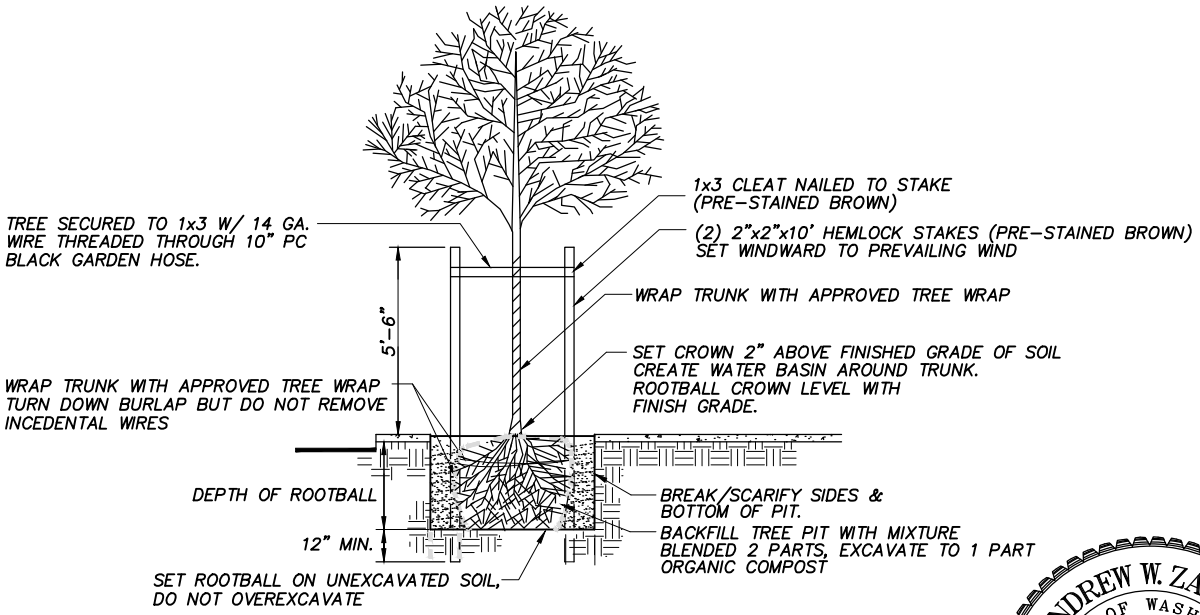

STREET TREE SECTION
N.T.S.

Preliminary

11/09/2016 1:38:54 PM

ANDREW W. ZAGARS
STATE OF WASHINGTON
36100
REGISTERED
PROFESSIONAL ENGINEER

TOPSOILING NOTES

1.) ALL PLANT BEDS TO RECIEVE A UNIFORM LAYER OF PREPARED PLANTING MIX. 4" DEEP AND ROTOTILLED INTO SUBSOIL TO A DEPTH OF 8". PLANTING MIX TO BE EQUAL PARTS SANDYLOAM, PEAT HUMUS AND ORGANIC COMPOST

2.) BACKFILL FOR TREE PITS SHALL BE A UNIFORM BLENDED MIXTURE OF 2 PARTS EXCAVATE AND 1 PART ORGANIC COMPOST.

3.) ORGANIC COMPOST SHALL BE STEERCO, GRO-CO, CEDAR GROW COMPOST, NUTRI MULCH OR OTHER EQUAL POST CONSUMER RECYCLED HORTICULTURAL COMPOST PRODUCTS.

CITY OF SAMMAMISH
DEPARTMENT OF PUBLIC WORKS

PLANTER STRIP
DETAIL

APPROVED BY
CITY ENGINEER _____ DATE _____

REV	DWN	CKD	DATE	FILE
			AUG-XX-2015	FIG02-18

REV. NO. X

Exhibit 4

STOP CONTROLLED INTERSECTIONS

EXAMPLE: MAJOR STREET SPEED LIMIT = 20 M.P.H.

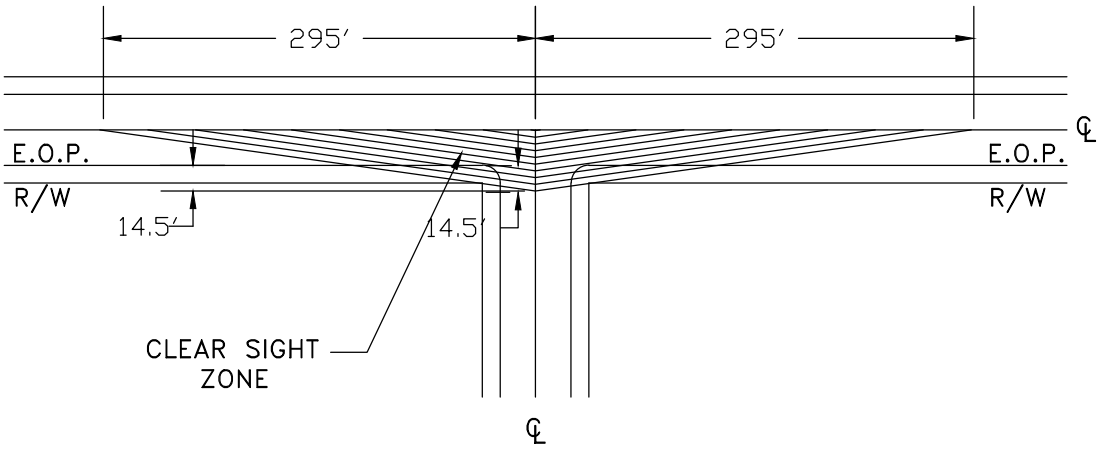

SIGHT DISTANCE (FT.)		
	(A.)	(B.)
SPEED LIMIT	ARTERIAL STREET	LOCAL STREET
20 MPH	295	295
25 MPH	355	355
30 MPH	415	415
35 MPH	470	470
40 MPH	530	530
50 MPH	590	590

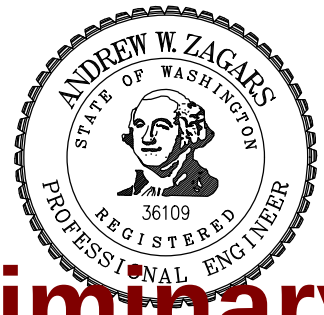

Preliminary

11/09/2016 1:38:57 PM

GENERAL NOTES:

1. CRITERIA FOR SIGHT DISTANCES ARE BASED ON THE CURRENT AASHTO STANDARDS.

CITY OF SAMMAMISH
DEPARTMENT OF PUBLIC WORKS

SIGHT OBSTRUCTION

APPROVED BY
CITY ENGINEER _____ DATE _____

REV	DWN	CKD	DATE	FILE
	XXX	XXX	AUG-XX-2015	FIG02-19A

REV. NO. X

Exhibit 4

UNCONTROLLED INTERSECTIONS

EXAMPLE: MAJOR STREET SPEED LIMIT = 30 M.P.H.
MINOR STREET SPEED LIMIT = 25 M.P.H.

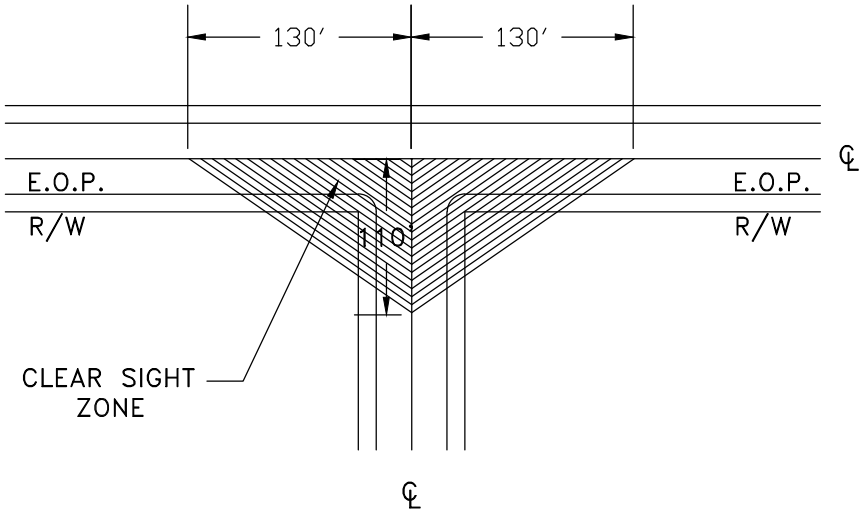

SIGHT DISTANCE (FT.)		
	(A.)	(B.)
SPEED LIMIT	ARTERIAL STREET	LOCAL STREET
20 MPH	90	90
25 MPH	110	110
30 MPH	130	130
35 MPH	155	155
40 MPH	180	180

Preliminary

11/09/2016 1:39:05 PM

GENERAL NOTES:

1. CRITERIA FOR SIGHT DISTANCES ARE BASED ON THE CURRENT AASHTO STANDARDS.

CITY OF SAMMAMISH
DEPARTMENT OF PUBLIC WORKS

SIGHT OBSTRUCTION

APPROVED BY
CITY ENGINEER _____ DATE _____

REV	DWN	CKD	DATE	FILE
	XXX	XXX	AUG-XX-2015	FIG02-19B

REV. NO. X

Exhibit 4

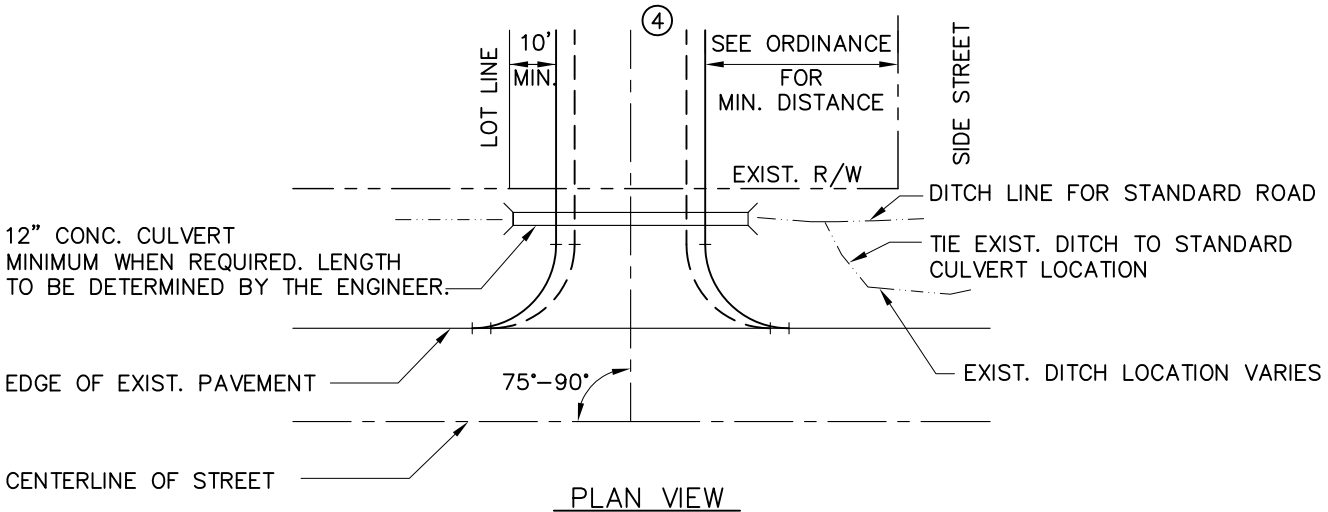

PLAN VIEW

N.T.S.

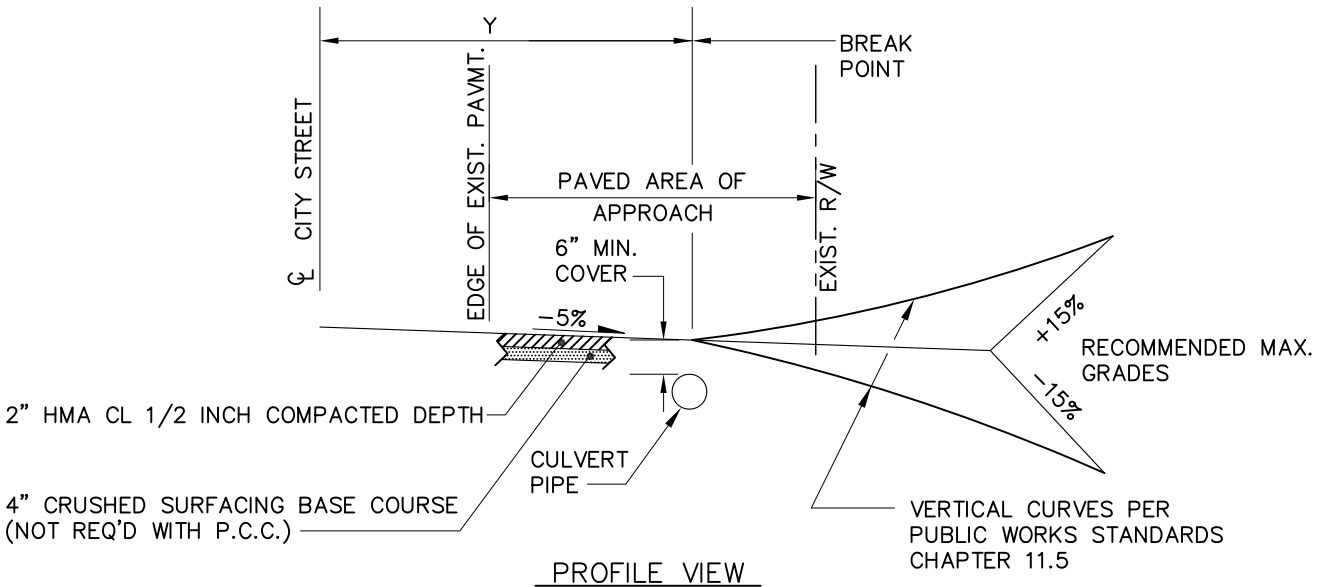

PROFILE VIEW

N.T.S.

1. ALL MATERIALS & WORKMANSHIP SHALL BE IN ACCORDANCE WITH THE REQUIREMENTS OF THE LATEST STATE OF WASHINGTON, DEPT. OF HIGHWAYS STANDARD SPECIFI–CATIONS FOR RAOD & BRIDGE CONSTRUCTION.
2. PAVED APPROACH MAY BE 6" CONCRETE CLASS 4000 WHEN ROADWAY CURB & GUTTER IS PRESENT.
3. STORM DRAINAGE FROM THE ROAD APPROACH SHALL NOT BE PERMITTED TO DRAIN ONTO THE ROADWAY SURFACE. CATCH BASINS OR OTHER DRAINAGE DEVICES SHALL BE USED TO INTERCEPT & DIVERT THIS WATER.
4. FOLLOW ADDITIONAL INSTRUCTIONS AS DIRECTED BY THE APPROVING ENGINEER AS STATED ON THE APPROVED PERMIT.
5. SEE PUBLIC WORK STANDARDS TABLE 11.1 FOR DRIVEWAY WIDTHS.

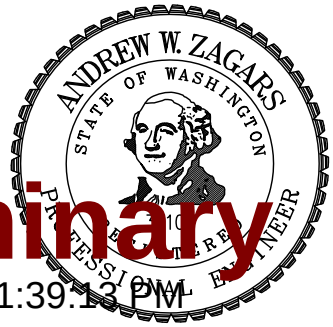

Preliminary

11/09/2016 1:39:13 PM

CITY OF SAMMAMISH DEPARTMENT OF PUBLIC WORKS			
RESIDENTIAL DRIVEWAY			
APPROVED BY CITY ENGINEER _____ DATE _____			
REV	DWN XXX	CKD XXX	DATE AUG–XX–2015	FILE FIG02–20

REV. NO. X

Exhibit 4

NOTE:

1. POST SIGNS "NO PARKING FIRE LANE" (R7-1 MUTCD) AND "TOW-AWAY ZONE" (R7-201 MUTCD) AT HAMMERHEAD ENDS.

2. FOR FURTHER DETAILS SEE UPMC 13.15.560.

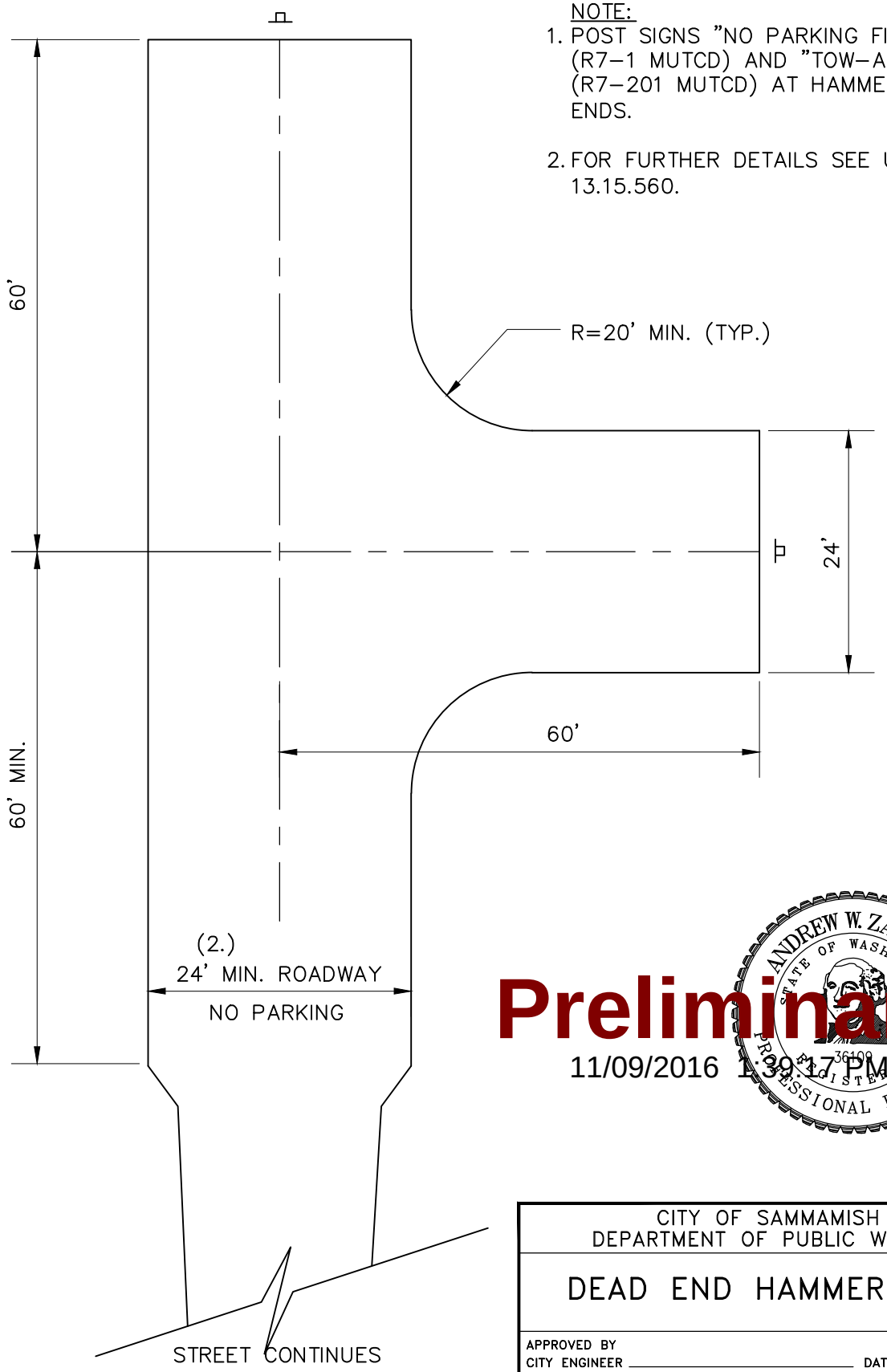

Preliminary

11/09/2016 1:39:17 PM

ANDREW W. ZAGARS
STATE OF WASHINGTON
36109
REGISTERED
PROFESSIONAL ENGINEER

CITY OF SAMMAMISH
DEPARTMENT OF PUBLIC WORKS

DEAD END HAMMERHEAD

APPROVED BY
CITY ENGINEER _____ DATE _____

REV	DWN	CKD	DATE	FILE
	XXX	XXX	AUG-XX-2015	FIG02-21

REV. NO. X

Exhibit 4

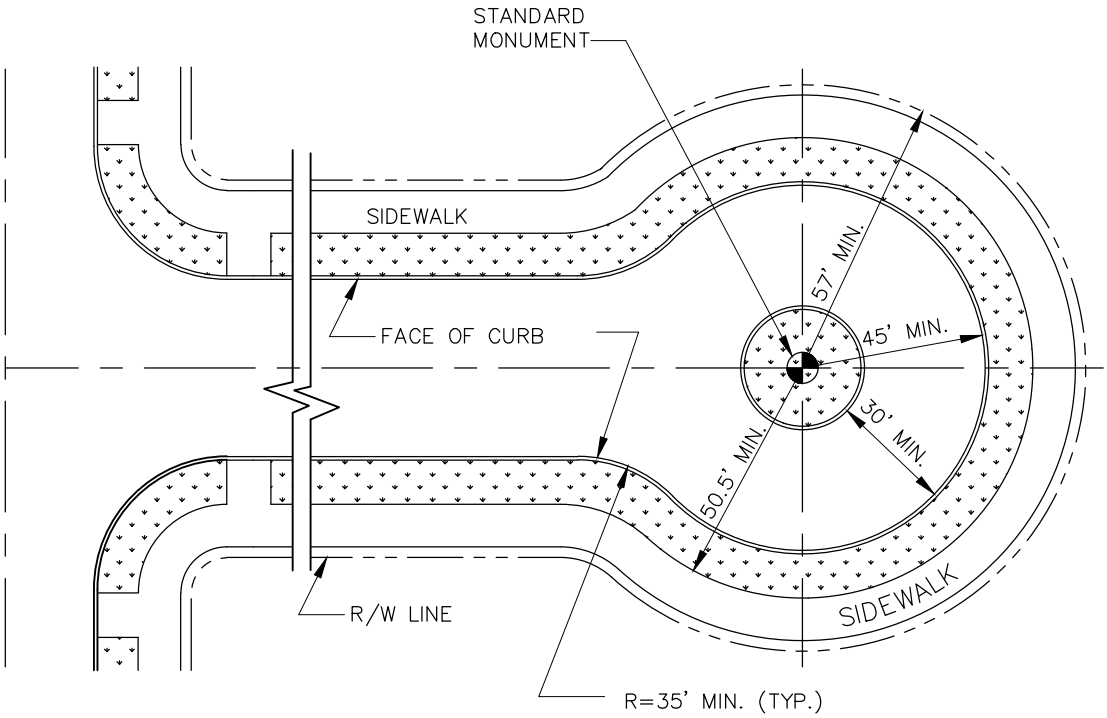

NOTES:
SEE FIG 3-08a FOR CURBS.

Preliminary
11/09/2016 1:39:20 PM

CITY OF SAMMAMISH
DEPARTMENT OF PUBLIC WORKS

PERMANENT
CUL-DE-SAC

APPROVED BY
CITY ENGINEER _____ DATE _____

REV	DWN	CKD	DATE	FILE
	XXX	XXX	AUG-XX-2015	FIG02-22

REV. NO. X

Exhibit 4

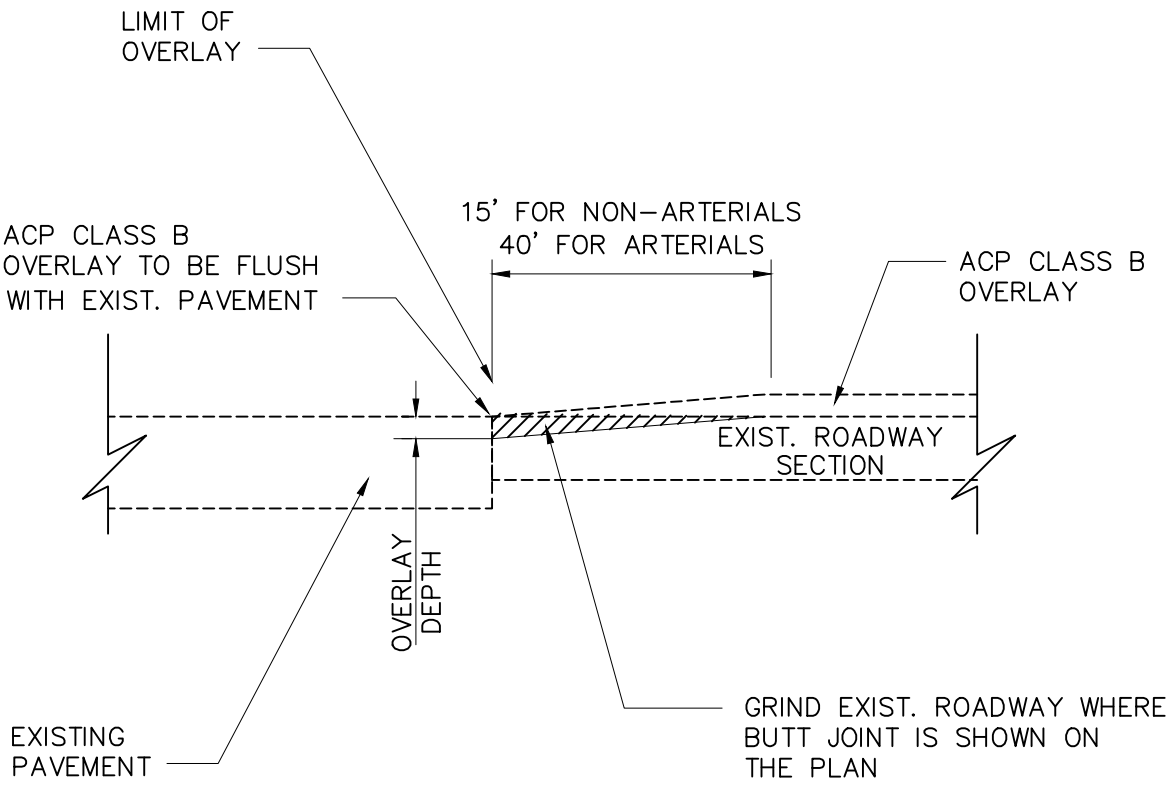

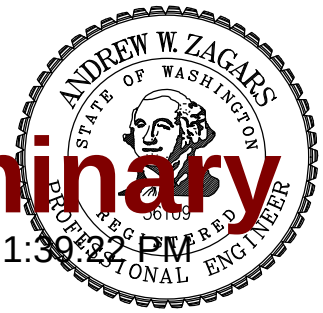

Preliminary
11/09/2016 1:39:22 PM

NOTES:

1. EMULSIFIED ASPHALT GRADE CSS-1. TACK SHALL BE APPLIED TO EDGES OF EXISTING PAVEMENT. ALL JOINTS SHALL BE SEALED USING PAVING ASPHALT AR4000W.

CITY OF SAMMAMISH
DEPARTMENT OF PUBLIC WORKS

BUTT JOINT
DETAIL

APPROVED BY
CITY ENGINEER _____ DATE _____

REV	DWN	CKD	DATE	FILE
	XXX	XXX	AUG-XX-2015	FIG02-23

REV. NO. X

Exhibit 4

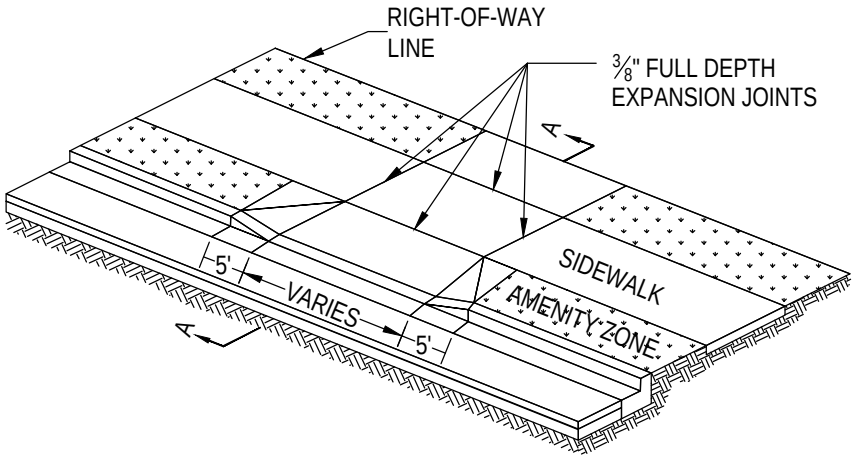

ISOMETRIC VIEW

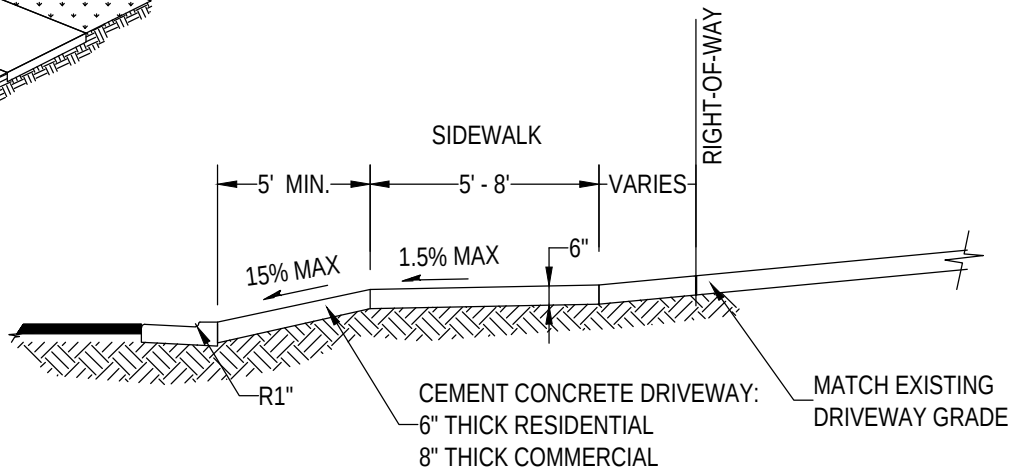

SECTION A-A

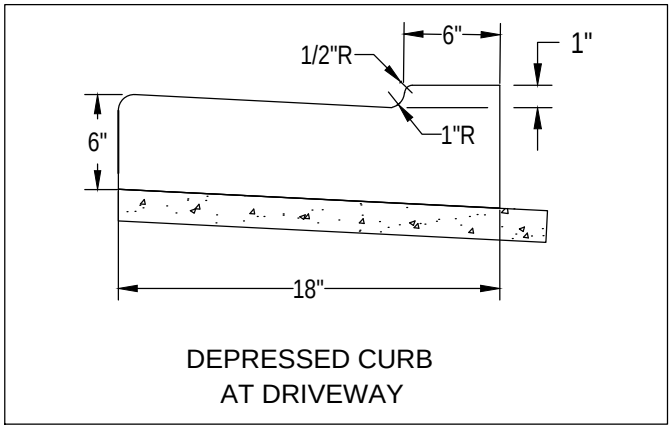

DEPRESSED CURB
AT DRIVEWAY

Preliminary

11/09/2016 1:39:25 PM

NOTES:

1. MATERIAL - WSDOT CONCRETE CLASS 4000.
2. FULL DEPTH EXPANSION JOINT SHALL BE INSTALLED ON CENTER OF APROACH IF DRIVEWAY WIDTH IS 15' OR GREATER.
3. CURB SHALL BE IN COMPLIANCE WITH STD DWG 3-08a.
4. NO REBAR SHALL BE PLACED IN CURB, GUTTER, DRIVEWAY, OR SIDEWALK.

CITY OF SAMMAMISH
DEPARTMENT OF PUBLIC WORKS

CURB AND GUTTER SECTION
DRIVEWAY APPROACH

APPROVED BY
CITY ENGINEER _____ DATE _____

REV	DWN	CKD	DATE	FILE
	TTC	AWZ	AUG-XX-2015	FIG03-01

REV. NO. X

Exhibit 4

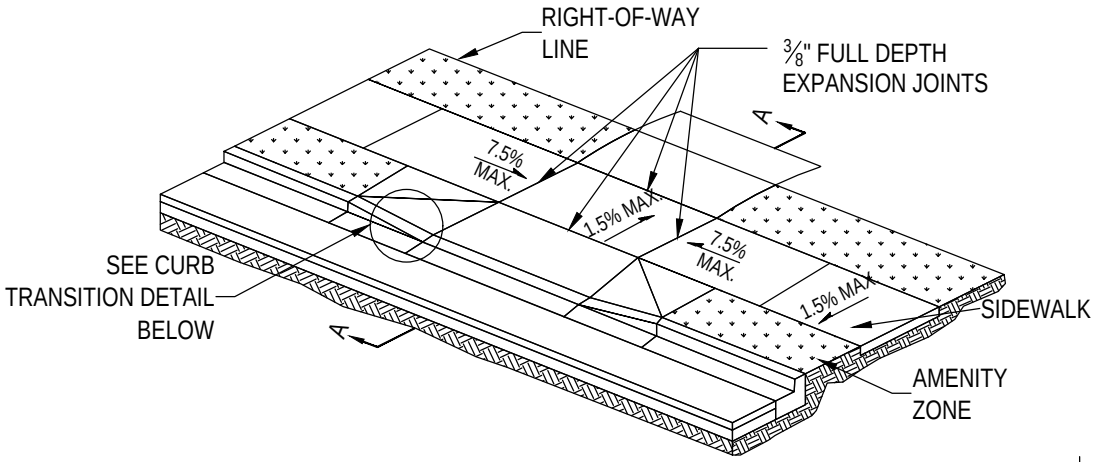

ISOMETRIC VIEW

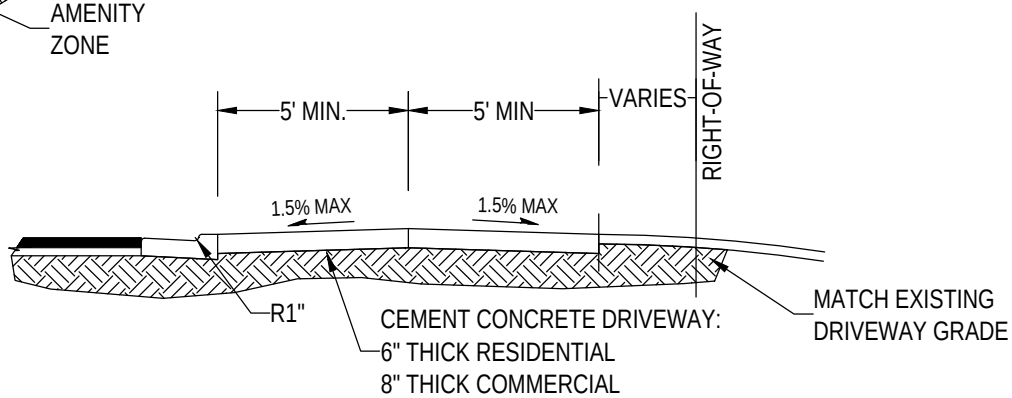

SECTION A-A

NOTES:

1. MATERIAL - WSDOT CONCRETE CLASS 4000.
2. FULL DEPTH EXPANSION JOINT SHALL BE INSTALLED IF DRIVEWAY WIDTH IS 10' OR GREATER.
3. CURB SHALL BE IN COMPLIANCE WITH STD DWG 3-08a.
4. NO REBAR SHALL BE PLACED IN CURB, GUTTER, DRIVEWAY, OR SIDEWALK.

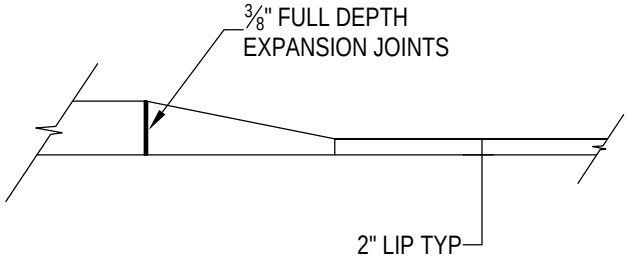

CURB TRANSITION DETAIL

Preliminary

11/09/2016 1:39:27PM

CITY OF SAMMAMISH DEPARTMENT OF PUBLIC WORKS			
DRIVEWAY APPROACH: REVERSE SLOPE			
APPROVED BY CITY ENGINEER _____ DATE _____			
DWN TTC	CKD AWZ	DATE AUG-XX-2015	FILE FIG03-02

REV

REV. NO. X

Exhibit 4

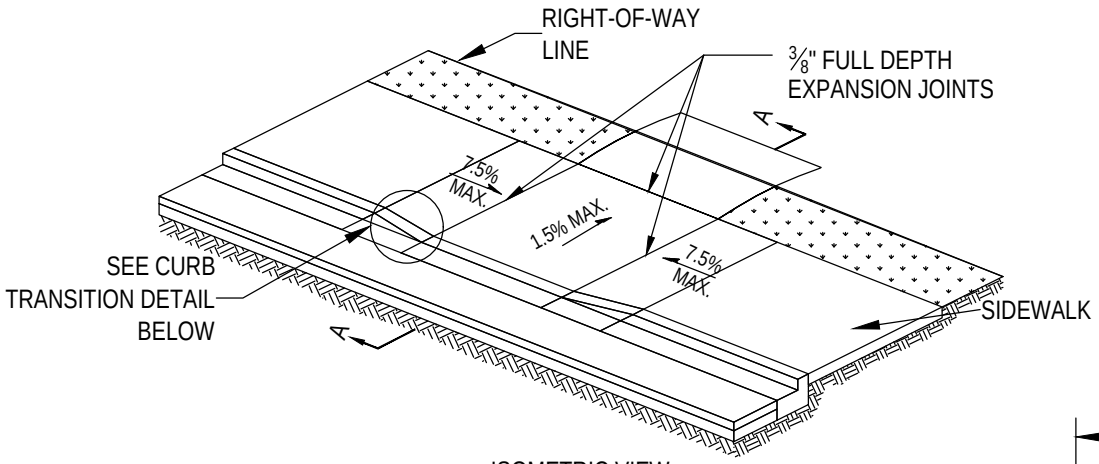

ISOMETRIC VIEW

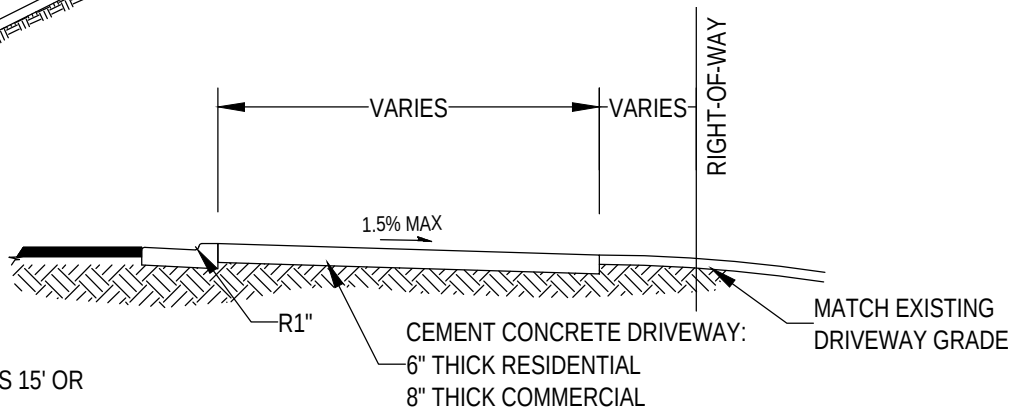

SECTION A-A

NOTES:

1. MATERIAL - WSDOT CONCRETE CLASS 4000.
2. FULL DEPTH EXPANSION JOINT SHALL BE INSTALLED IF DRIVEWAY WIDTH IS 15' OR GREATER.
3. CURB SHALL BE IN COMPLIANCE WITH STD DWG 3-08a.
4. NO REBAR SHALL BE PLACED IN CURB, GUTTER, DRIVEWAY, OR SIDEWALK.

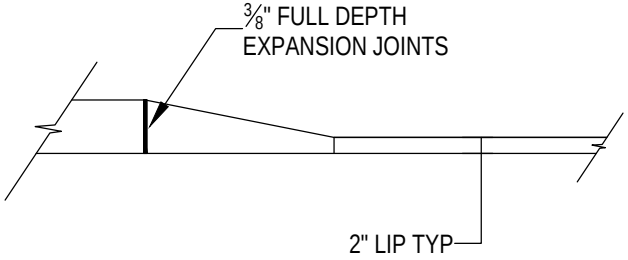

CURB TRANSITION DETAIL

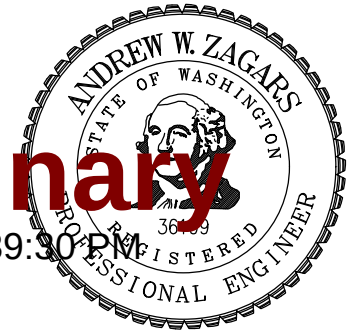

Preliminary

11/09/2016 1:39:30 PM

CITY OF SAMMAMISH DEPARTMENT OF PUBLIC WORKS			
DRIVEWAY APPROACH: REVERSE SLOPE WITHOUT AMENITY ZONE			
APPROVED BY CITY ENGINEER _____ DATE _____			
REV	DWN TTC	CKD AWZ	DATE AUG-XX-2015	FILE FIG03-03

REV. NO. X

Exhibit 4

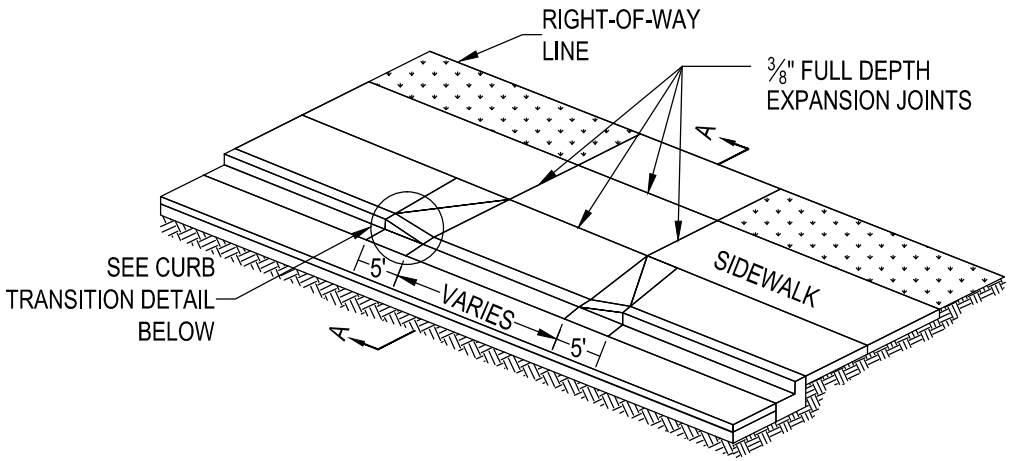

ISOMETRIC VIEW

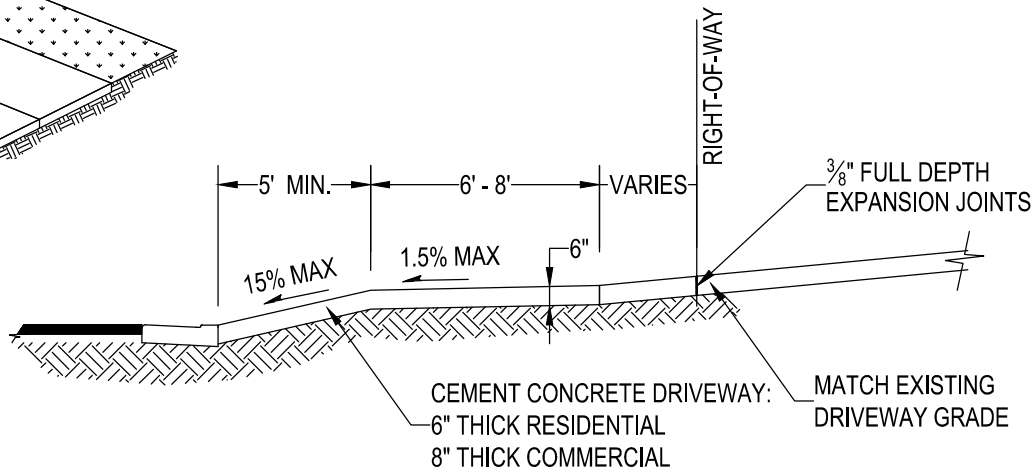

SECTION A-A

NOTES:

1. MATERIAL - WSDOT CONCRETE CLASS 4000.
2. FULL DEPTH EXPANSION JOINT SHALL BE INSTALLED IF DRIVEWAY WIDTH IS 15' OR GREATER.
3. CURB SHALL BE IN COMPLIANCE WITH STD DWG 3-12.
4. NO REBAR SHALL BE PLACED IN CURB, GUTTER, DRIVEWAY, OR SIDEWALK.

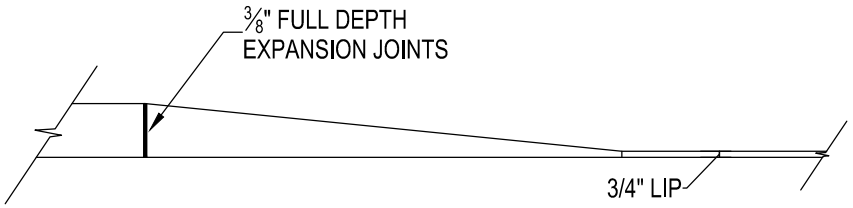

CURB TRANSITION DETAIL

Preliminary

11/09/2016 1:39:32 PM

CITY OF SAMMAMISH DEPARTMENT OF PUBLIC WORKS			
DRIVEWAY APPROACH WITHOUT AMENITY ZONE (8' SIDEWALK WIDTH)			
APPROVED BY CITY ENGINEER _____ DATE _____			
REV	DWN TTC	CKD AWZ	DATE AUG-XX-2015	FILE FIG03-04

REV. NO. X

Exhibit 4

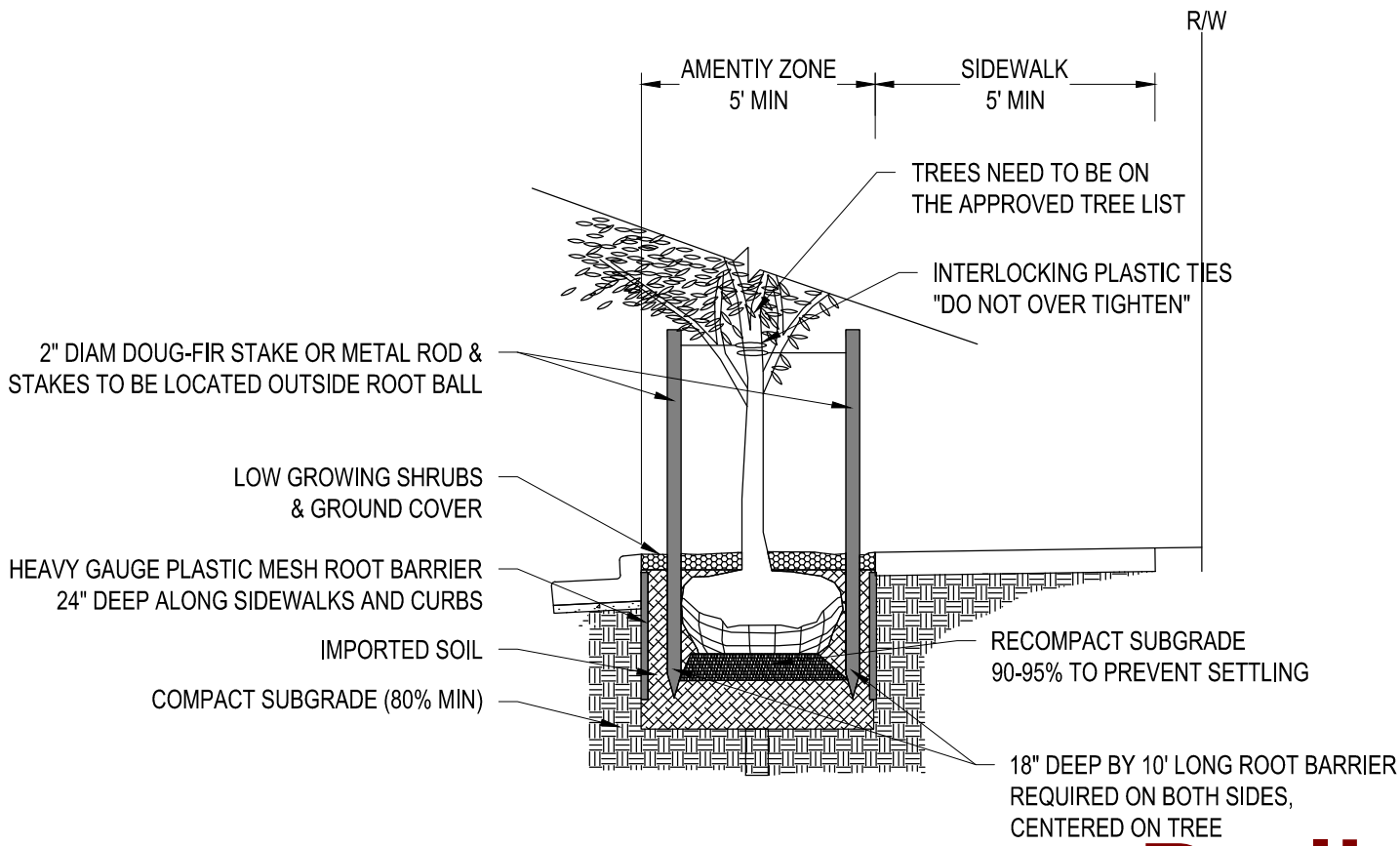

Preliminary
11/09/2016 1:39:35 PM

NOTES:

1. TREE PIT SHALL NOT BE LESS THAN 2 TIMES ROOT BALL DIAM.
2. CUT ALL TIES & FOLD BACK BURLAP FROM UPPER ⅓ OF ROOT BALL.
3. WATER DAILY UNTIL ESTABLISHED, FERTILIZE & USE GROWTH HORMONE.

CITY OF SAMMAMISH
DEPARTMENT OF PUBLIC WORKS

AMENITY ZONE

APPROVED BY
CITY ENGINEER _____ DATE _____

REV	DWN	CKD	DATE	FILE
	TTC	AWZ	AUG-XX-2015	FIG03-05

REV. NO. X

Exhibit 4

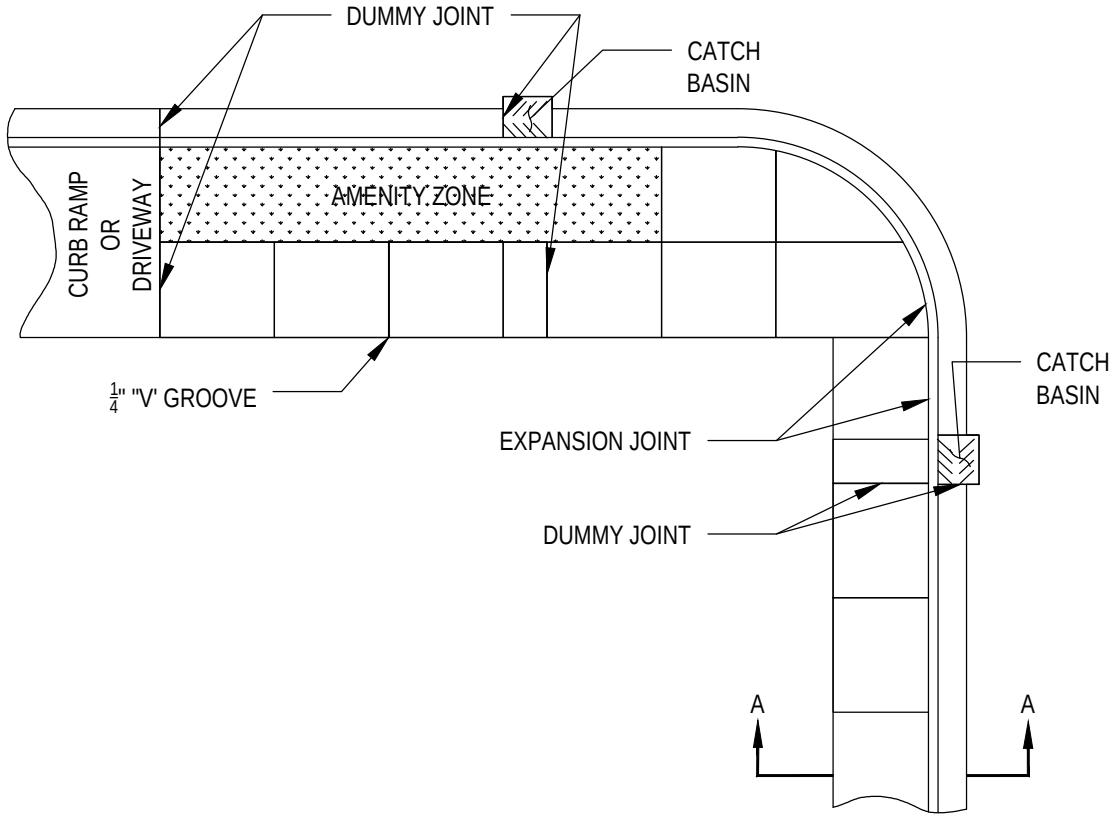

VERTICAL CURB & SIDEWALK

DUMMY JOINT @ MAX. 15' C-C, 10' TYP, 15' MAX

EXPANSION JOINT ALONG CURB

1/4" "V" GROOVE @ MAX. 5' C-C

NOTES:

1. CONCRETE SHALL HAVE 4" PERIMETER EDGING.
2. SIDEWALK JOINTS SHOULD MATCH EXPANSION JOINTS.

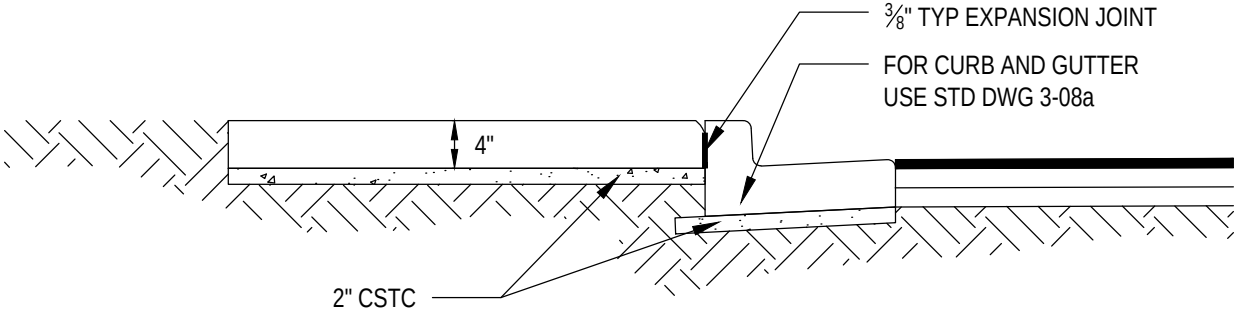

SECTION A-A

Preliminary

11/09/2016 1:39:37 PM

ANDREW W. ZAGARS
STATE OF WASHINGTON
36109
REGISTERED
PROFESSIONAL ENGINEER

CITY OF SAMMAMISH
DEPARTMENT OF PUBLIC WORKS

SIDEWALK

APPROVED BY
CITY ENGINEER _____ DATE _____

REV	DWN	CKD	DATE	FILE
	TTC	AWZ	AUG-XX-2015	FIG03-06

REV. NO. X

Exhibit 4

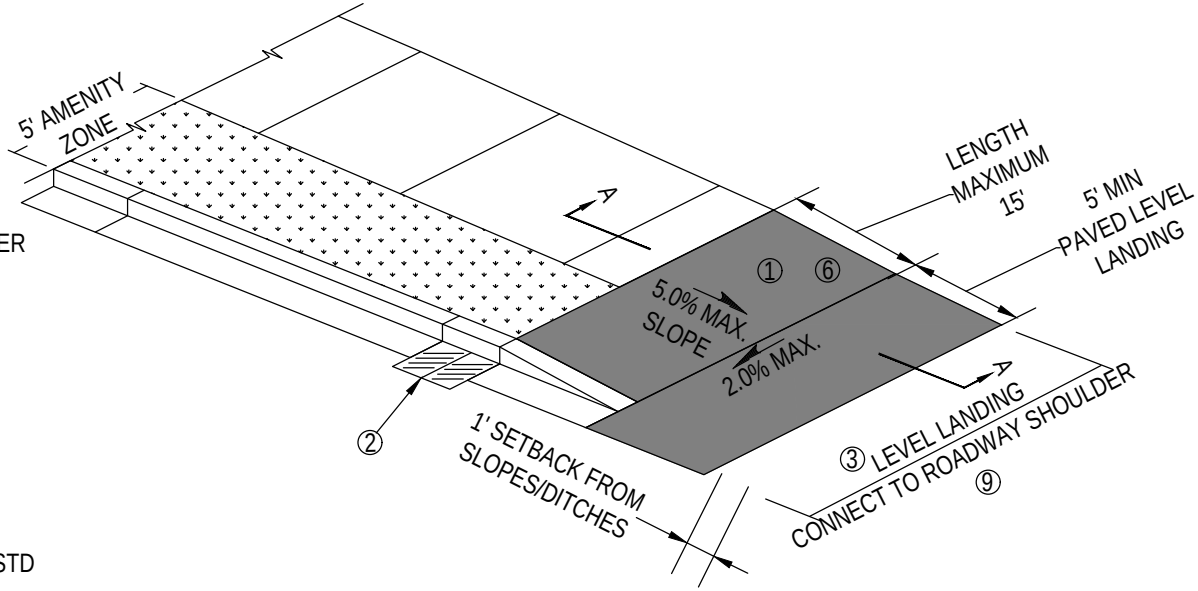

NOTES:

1. RAMP, CURB TAPER, AND LEVEL LANDING ALL ASPHALT OVER 2" CSTC.
2. CATCH BASINS LOCATE AT END OF IMPROVEMENTS TO FACILITATE FUTURE EXTENSIONS/CONNECTIONS.
3. FOR WIDTHS OF PAVEMENT AND SHOULDER SEE STD DWG 1-01, 1-02, 1-03, 1-05.
4. FOR TRANSITIONS ADJACENT TO DITCHES, DITCH SLOPING (3:1 TYPICAL), 1' SETBACK & PIPE BEVEL END DESIGN (SEE STD DWG 7-01) MAY BE REQUIRED.
5. FOR CURB AND SIDEWALK JOINTS SEE STD DWG 3-06.
6. DETECTABLE WARNING PATTERN (TRUNCATED DOMES) MAY BE REQUIRED IF RAMP CROSSES TRAVEL LANE OF PUBLIC STREET OR AS SPECIFIED BY THE CITY TRAFFIC ENGINEER (SEE STD DWG 2-06).
7. CURB RADIUS REQUIRED AT INTERSECTIONS.
8. EXISTING SHOULDER MAY REQUIRE RESTORATION WITH CSTC.

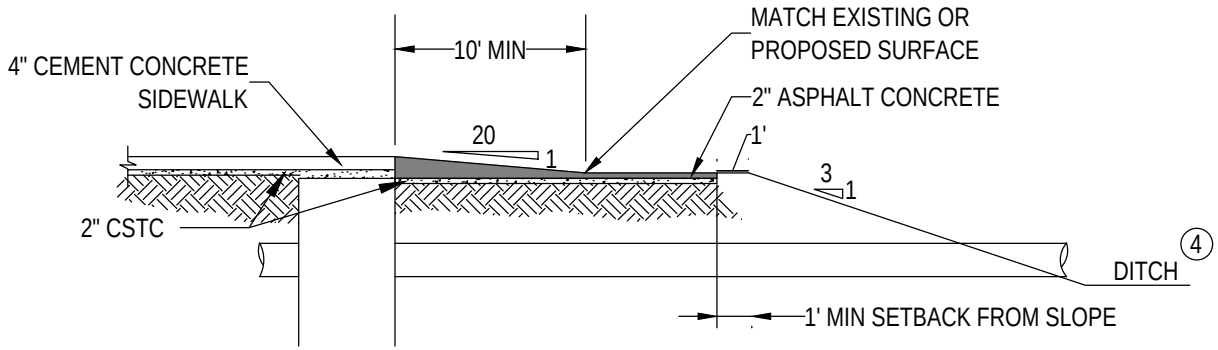

SECTION A-A

Preliminary

11/09/2016 1:39:39 PM

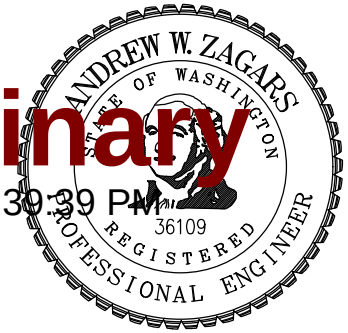

CITY OF SAMMAMISH
DEPARTMENT OF PUBLIC WORKS

ASPHALT TRANSITION RAMP TO SHOULDER

APPROVED BY
CITY ENGINEER _____ DATE _____

REV	DWN	CKD	DATE	FILE
	TTC	AWZ	AUG-XX-2015	FIG03-07

REV. NO. X

Exhibit 4

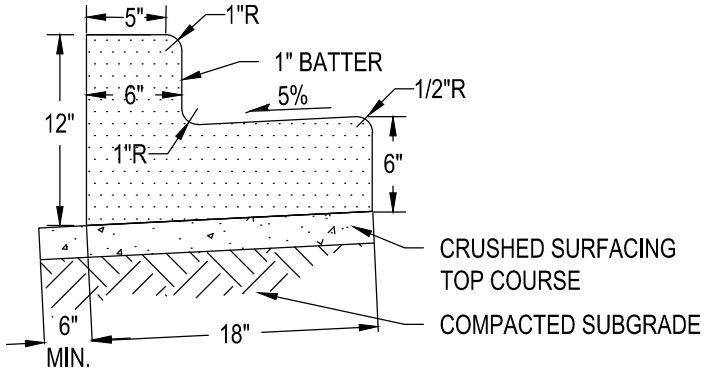

TYPE A CURB AND GUTTER

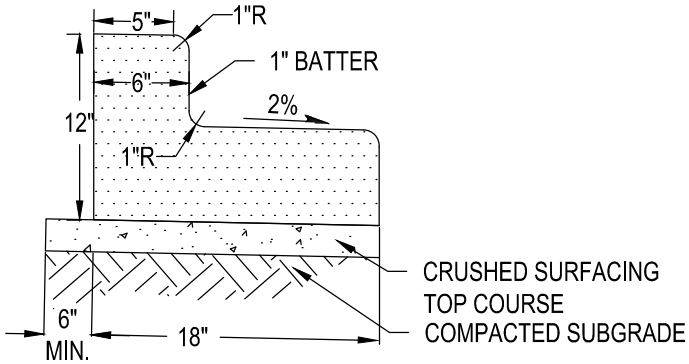

MEDIAN CURB AND GUTTER

NOTES:

1. CONSTRUCT 10 FT LONG CURB TYPE TRANSITION BETWEEN DIFFERENT CURB TYPES.

Preliminary

11/09/2016 1:39:41 PM

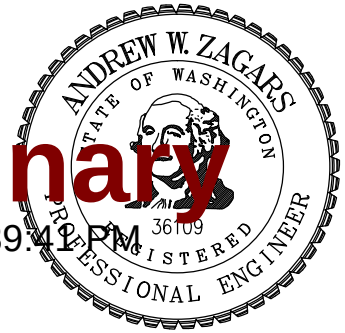

	CITY OF SAMMAMISH DEPARTMENT OF PUBLIC WORKS			
	CURBS			
	APPROVED BY CITY ENGINEER _____ DATE _____			
REV	DWN TTC	CKD AWZ	DATE AUG-XX-2015	FILE FIG03-8a

REV. NO. X

Exhibit 4

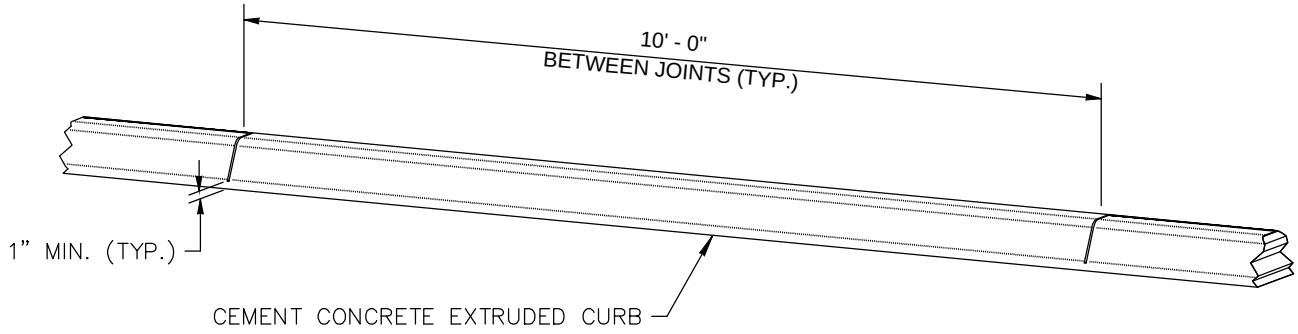

NOTES:
1. INSTALL PAVEMENT 2" BEYOND BACK OF CURB.
2. BOND EXTRUDED CURB TO EXISTING PAVEMENT WITH MORTAR PASTE.
3. JOINTS MAY BE FORMED DURING INSTALLATION USING A RIGID DIVIDER OR SAWCUT AFTER CONCRETE CURES TO MINIMUM STRENGTH.

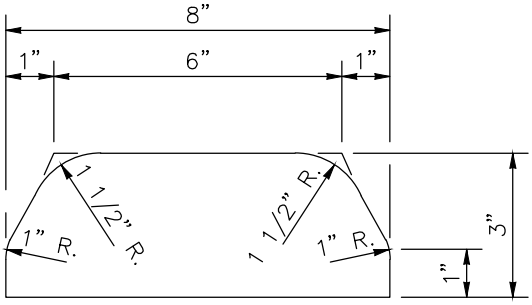

TYPE 4
(CEMENT CONCRETE)

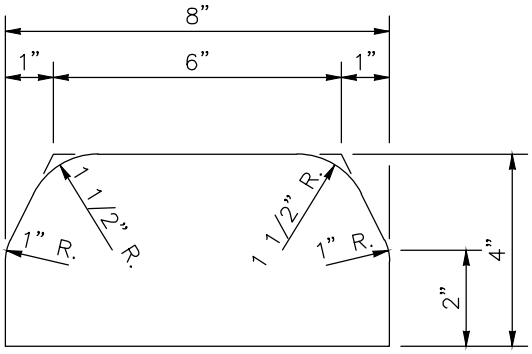

TYPE 5
(CEMENT CONCRETE)

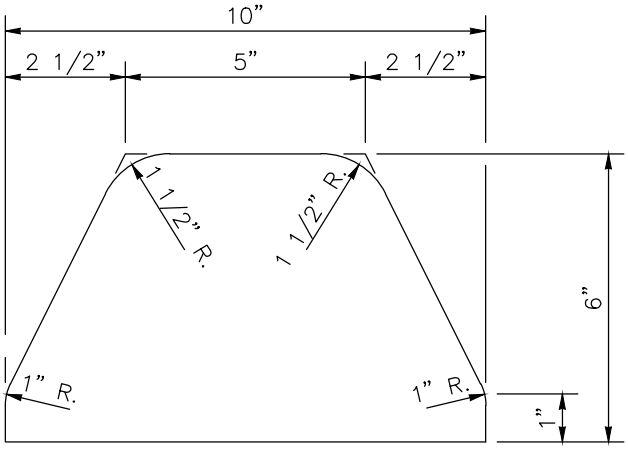

TYPE 6
(CEMENT CONCRETE)

Preliminary
11/09/2016 1:39:44 PM

ANDREW W. ZAGARS
STATE OF WASHINGTON
REGISTERED
PROFESSIONAL ENGINEER

CITY OF SAMMAMISH
DEPARTMENT OF PUBLIC WORKS

EXTRUDED CURB DETAIL

APPROVED BY
CITY ENGINEER _____ DATE _____

REV	DWN	CKD	DATE	FILE
	XXX	XXX	AUG-XX-2015	FIG03-08b

REV. NO. X

Exhibit 4

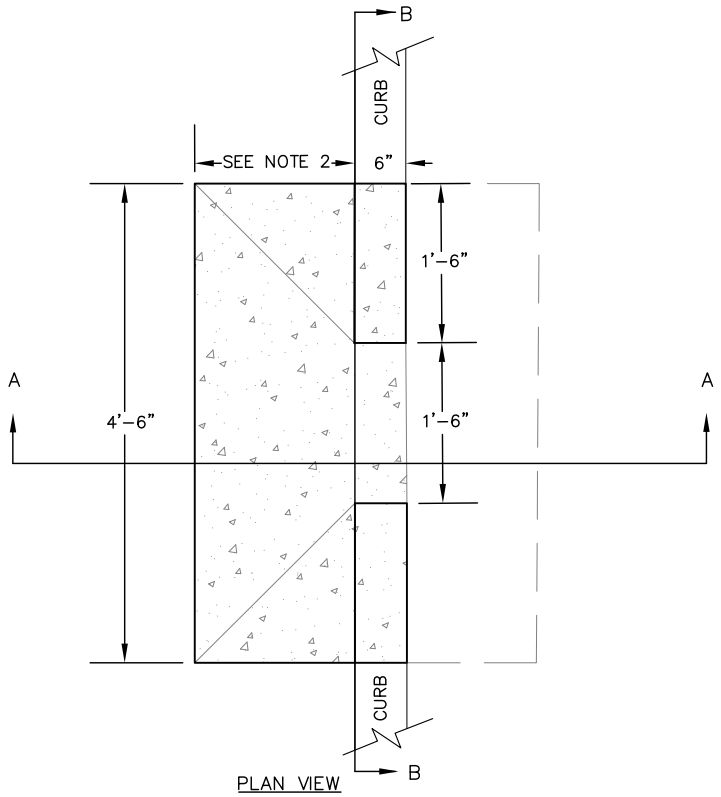

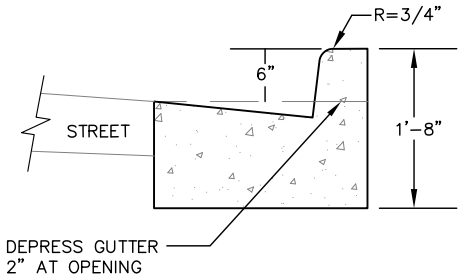

SECTION A-A

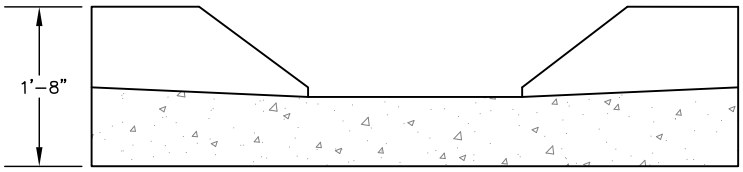

SECTION B-B

NOTES:

1. SPLASH PADS ARE REQUIRED AT ALL INLETS.
2. MATCH GUTTER PAN OF ADJACENT CURB AND GUTTER.

Preliminary
11/09/2016 1:39:48 PM

– NOT TO SCALE –

CITY OF SAMMAMISH
DEPARTMENT OF PUBLIC WORKS

CONCRETE CURB INLET

APPROVED BY
CITY ENGINEER _____ DATE _____

REV	DWN	CKD	DATE	FILE
	LG		SEPT-7-2016	3-09a

REV. NO. X

Exhibit 4

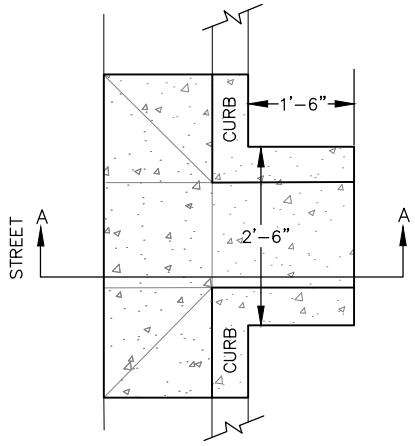

DETAIL A – WITH WINGWALLS AND CONCRETE PAD

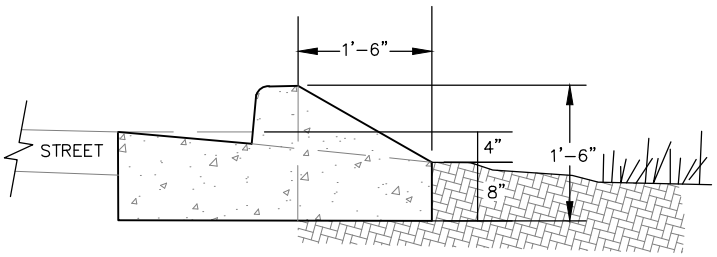

SECTION A–A

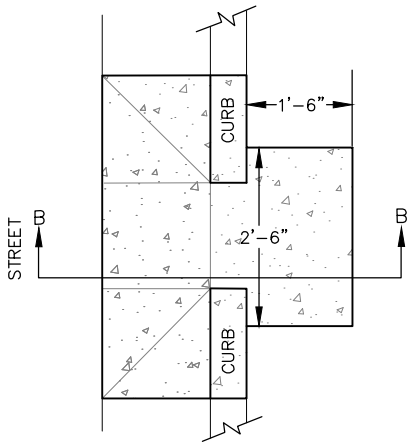

DETAIL B – WITH CONCRETE PAD ONLY

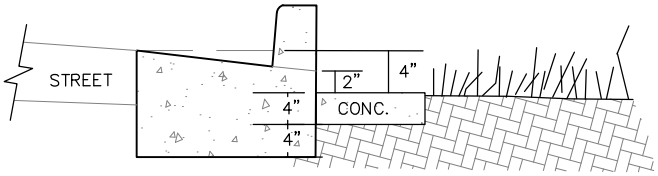

SECTION B–B

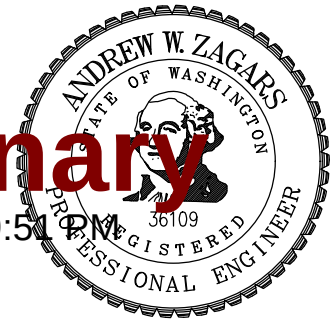

Preliminary

11/09/2016 1:39:51 PM

– NOT TO SCALE –

CITY OF SAMMAMISH DEPARTMENT OF PUBLIC WORKS			
CONCRETE CURB INLET			
APPROVED BY CITY ENGINEER _____ DATE _____			
REV	DWN LG	CKD	DATE SEPT–7–2016	FILE 3–09b

Exhibit 4

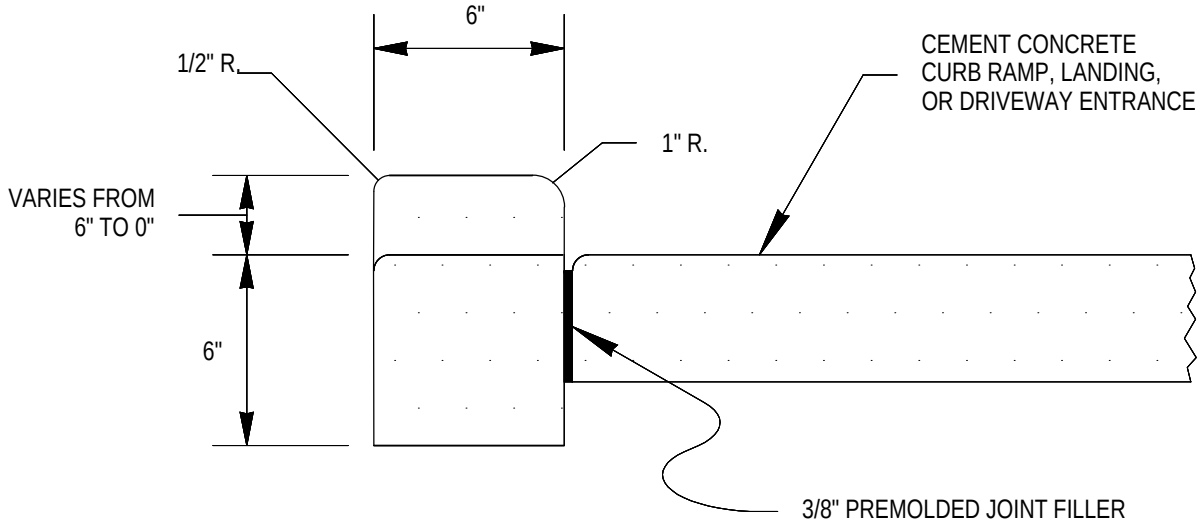

Preliminary

11/09/2016 1:39:53 PM

CITY OF SAMMAMISH
DEPARTMENT OF PUBLIC WORKS

PEDESTRIAN CURB

APPROVED BY
CITY ENGINEER _____ DATE _____

REV	DWN	CKD	DATE	FILE
	XXX	XXX	AUG-XX-2015	FIG03-11

REV. NO. X

Exhibit 4

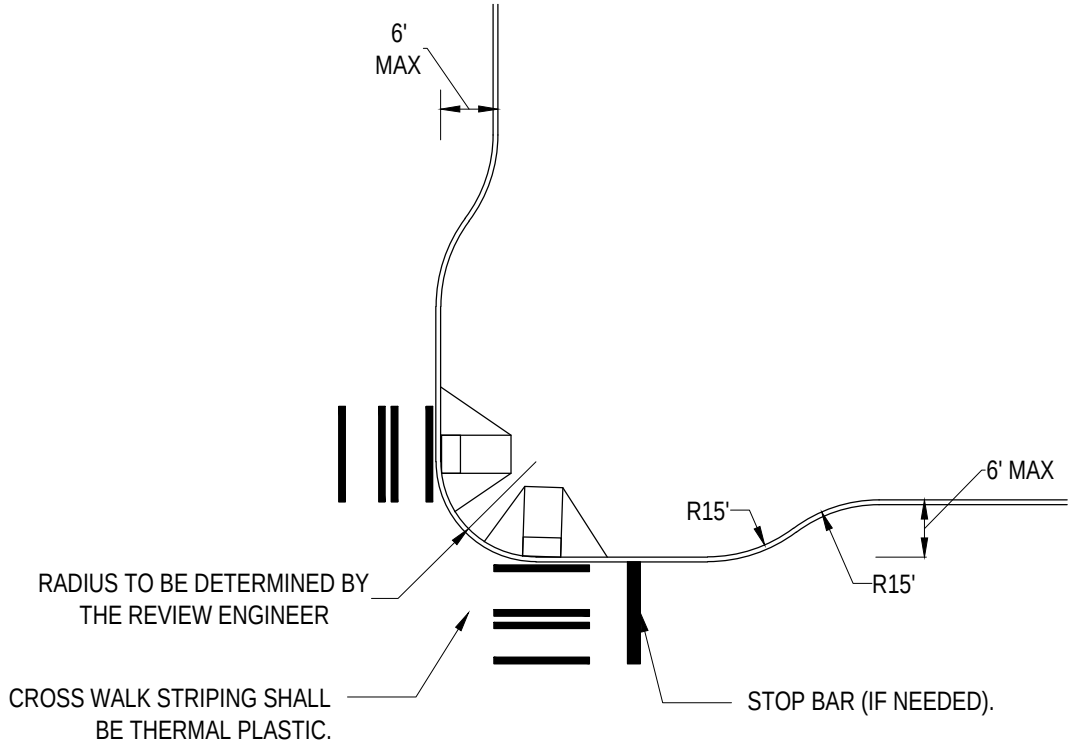

Preliminary

11/09/2016 1:39:56 PM

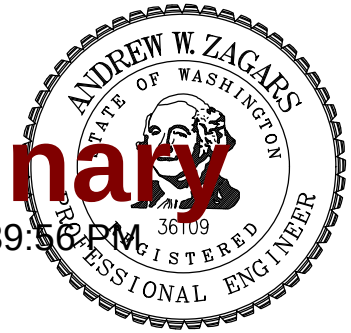

NOTES:

1. INTERSECTION RADII SHALL ACCOMMODATE DESIGN VEHICLES APPLICABLE TO STREET.

2. LENGTH OF CURB EXTENSIONS MUST RECOGNIZE SITE CONDITIONS, E.G. DRIVEWAY LOCATIONS.

CITY OF SAMMAMISH
DEPARTMENT OF PUBLIC WORKS

CURB EXTENSION

APPROVED BY
CITY ENGINEER _____ DATE _____

REV	DWN	CKD	DATE	FILE
	XXX	XXX	AUG-XX-2015	FIG03-12

REV. NO. X

Exhibit 4

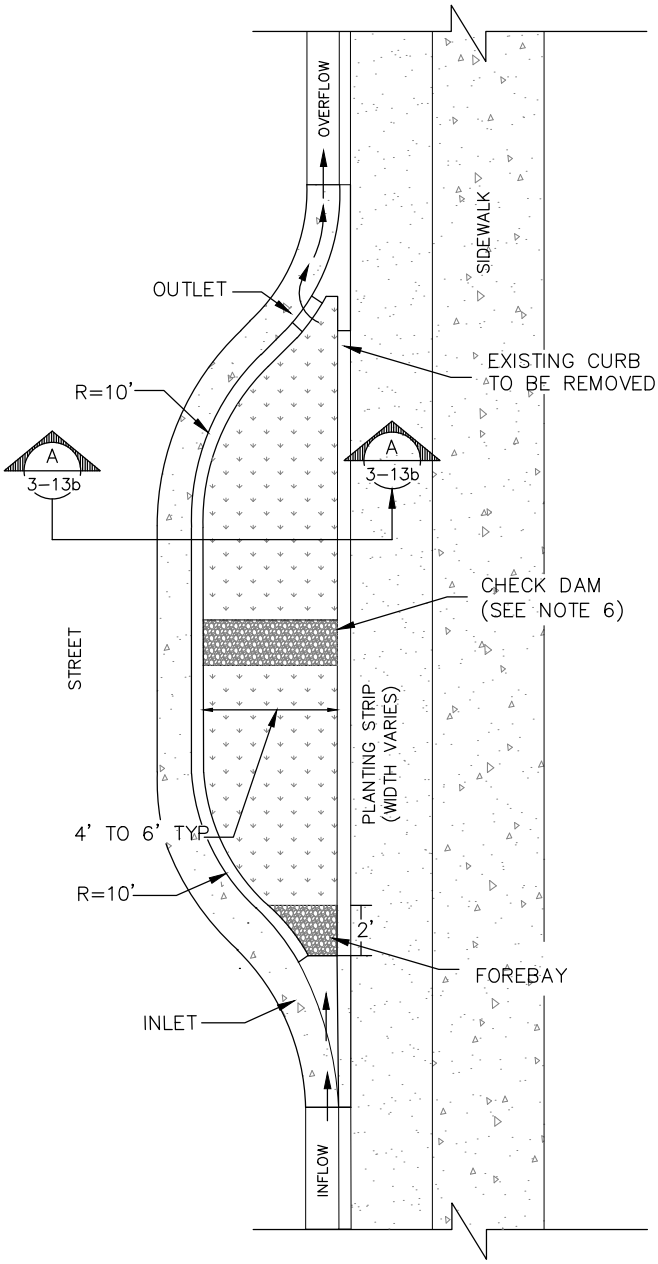

PLAN VIEW

NOTES:

1. AREA AND DEPTH OF FACILITY ARE BASED UPON ENGINEERING CALCULATIONS AND RIGHT OF WAY CONSTRAINTS.
2. LONGITUDINAL SLOPE OF PLANTER MATCHES ROAD.
3. INCLUDE BEGINNING AND ENDING STATIONS FOR EACH FACILITY. PROVIDE STATIONS AND ELEVATIONS AT EVERY INLET, OUTLET, AND CHECK DAM.
4. SIDEWALK ELEVATION MUST BE SET ABOVE INLET AND OUTLET ELEVATIONS TO ALLOW OVERFLOW TO DRAIN TO STREET BEFORE SIDEWALK.
5. INLETS AND OUTLETS REQUIRED.
6. CHECK DAMS MAY BE REQUIRED.
7. SEE CITY SURFACE WATER DESIGN MANUAL FOR FACILITY MEDIA REQUIREMENTS.
8. SPECIAL REQUIREMENTS FOR WATER LINES, METERS, AND FIRE HYDRANTS. SEE WATER DISTRICT FOR REQUIREMENTS.
9. UTILITY LINES MAY NEED TO BE SLEEVED OR RELOCATED.
10. WHERE FEASIBLE, WIDTH OF STORMWATER FACILITY SHOULD EXTEND INTO EXISTING PLANTING STRIP.

IMPORTANT: Utility conflicts and existing conditions can create major design variables. Locate utilities and survey existing conditions prior to beginning design work.

Preliminary
11/09/2016 1:39:58 PM

– NOT TO SCALE –

REV	CITY OF SAMMAMISH DEPARTMENT OF PUBLIC WORKS			
	CURB EXTENSION SECTION			
	APPROVED BY CITY ENGINEER _____ DATE _____			
	DWN LG	CKD	DATE SEPT-7-2016	FILE FIG03-13A

Exhibit 4

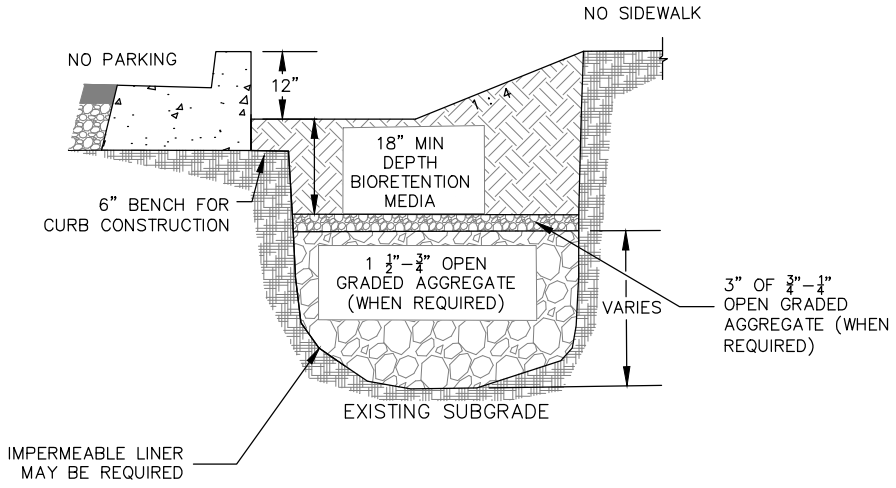

SECTION A–A
CURB EXTENSION SECTION
WITHOUT SIDEWALK

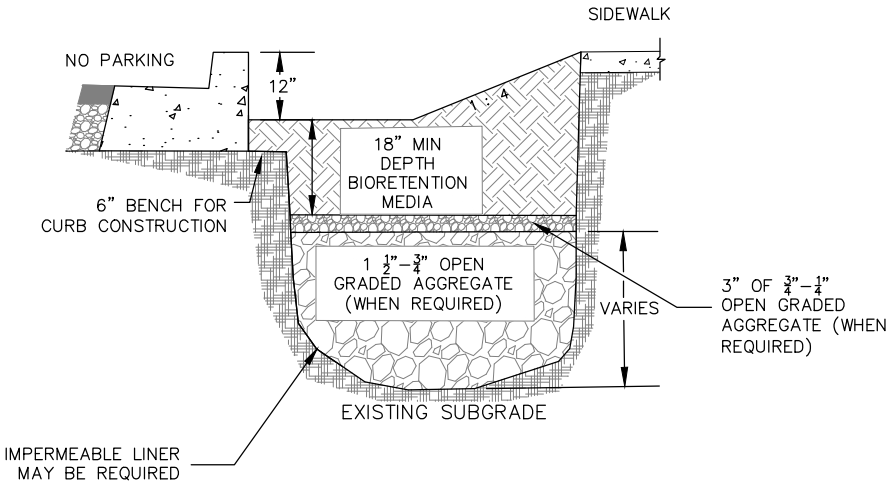

SECTION A–A
CURB EXTENSION SECTION
WITH SIDEWALK

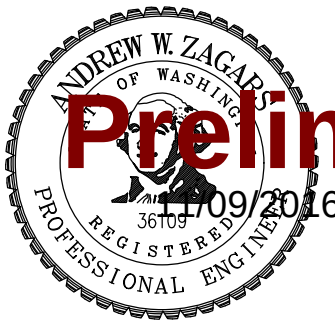

Preliminary
11/09/2016 1:40:04 PM

– NOT TO SCALE –

CITY OF SAMMAMISH
DEPARTMENT OF PUBLIC WORKS

CURB EXTENSION SECTION

APPROVED BY
CITY ENGINEER _____ DATE _____

REV	DWN	CKD	DATE	FILE
	LG		SEPT–7–2016	FIG03–13B

Exhibit 4

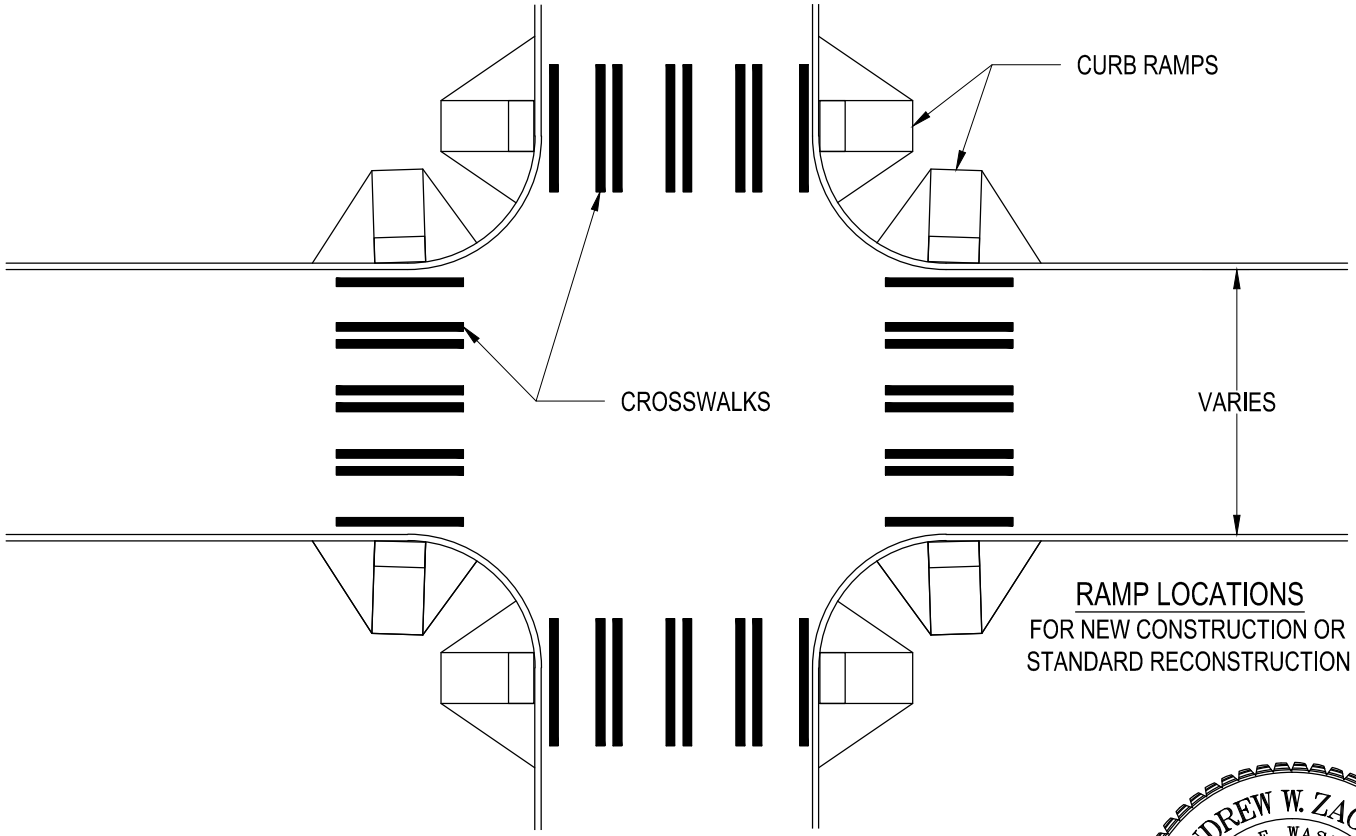

RAMP LOCATIONS
FOR NEW CONSTRUCTION OR
STANDARD RECONSTRUCTION

NOTES:

1. CURB RAMP CONSTRUCTION MUST COMPLY WITH CURRENT ADA STANDARDS.
2. CONSTRUCT RAMP WITH A MINIMUM 1' CLEARANCE FROM FIXED OBJECTS SUCH AS HYDRANTS, POLES, INLETS, AND OTHER UTILITIES.
3. CONSTRUCT RAMP IN ACCORDANCE WITH FIG02-06.
4. CROSSWALKS ARE ONLY MARKED PER PLAN OR AS DIRECTED BY ENGINEER.
5. WHEN RAMPS ARE CONSTRUCTED ON ONE SIDE OF STREET, RAMPS SHALL BE CONSTRUCTED AT CORRESPONDING LOCATIONS ON OPPOSITE SIDE OF STREET.

Preliminary
11/09/2016 1:40:06 PM

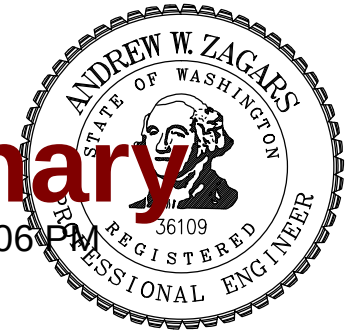

CITY OF SAMMAMISH
DEPARTMENT OF PUBLIC WORKS

CURB RAMP LOCATIONS

APPROVED BY
CITY ENGINEER _____ DATE _____

REV	DWN	CKD	DATE	FILE
	XXX	XXX	AUG-XX-2015	FIG03-14

REV. NO. X

Exhibit 4

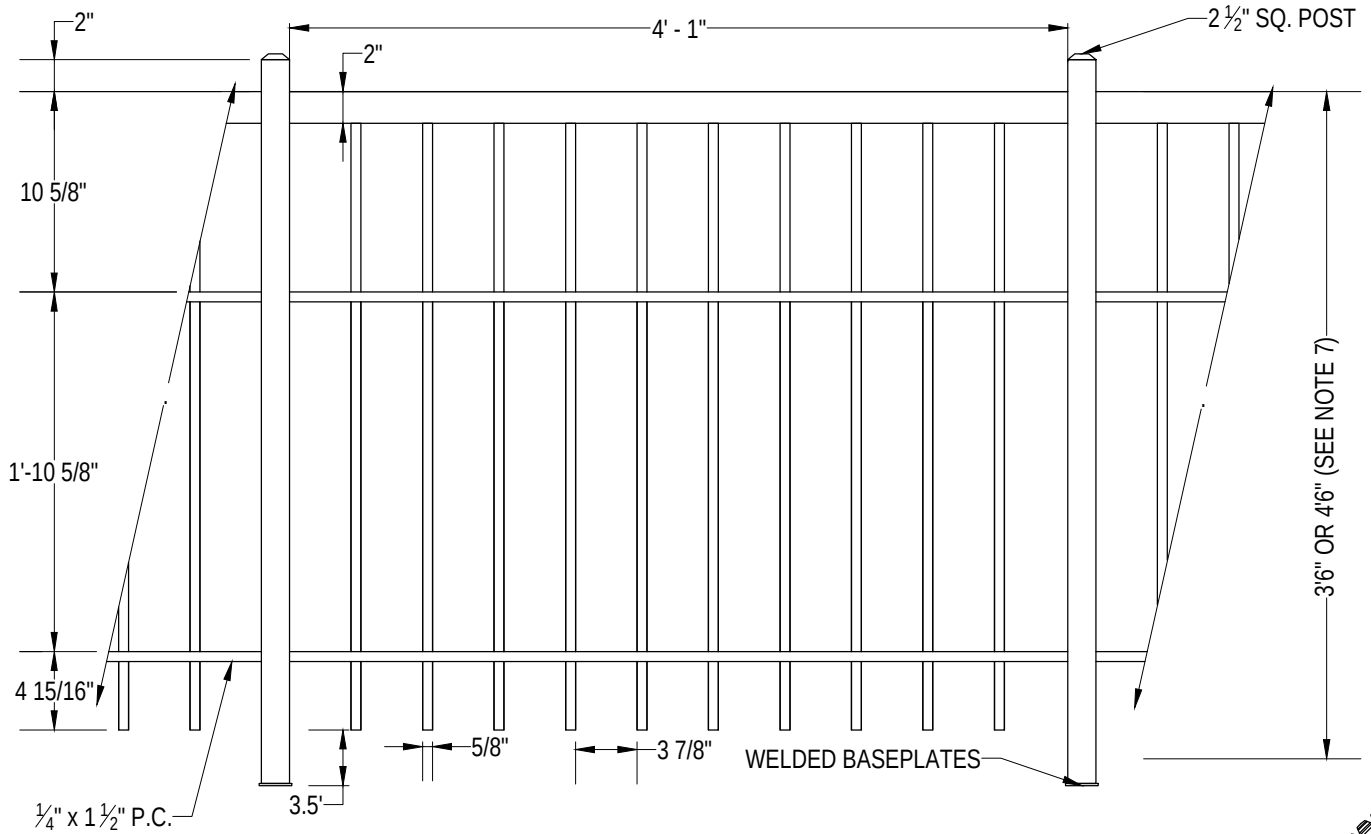

NOTES:

1. SHOP DRAWINGS OF RAILING SHALL BE SUBMITTED FOR APPROVAL SHOWING COMPLETE DIMENSIONS AND DETAILS OF FABRICATION AND INCLUDING AN ERECTION DIAGRAM. MATERIALS BEING USED SHALL BE SPECIFIED IN THE SHOP DRAWINGS.
2. ALL ALUMINUM PARTS SHALL BE GIVEN A CLEAR ANODIC COATING AT LEAST 0.0006 INCH THICK AND BE HOT WATER SEALED AND SHALL HAVE A UNIFORM FINISH.
3. CUTTING SHALL BE DONE BY SAWING OR MILLING AND ALL CUTS SHALL BE TRUE AND SMOOTH. FLAME CUTTING WILL NOT BE PERMITTED.
4. PIPE RAILING, PIPE BALUSTERS AND PIPE RAILING SPLICES SHALL BE ADEQUATELY WRAPPED TO ENSURE SURFACE PROTECTION DURING HANDLING AND TRANSPORTATION TO THE JOB SITE.
5. WELDING OF ALUMINUM SHALL BE IN ACCORDANCE WITH THE LATEST AASHTO STANDARD SPECIFICATIONS FOR STRUCTURAL SUPPORTS FOR HIGHWAY SIGNS, LUMINAIRES AND TRAFFIC SIGNALS.
6. ALLOW FOR EXPANSION AT APPROXIMATELY EVERY FOURTH POST.
7. TOP OF RAIL:
   3 FEET 6 INCHES FOR PEDESTRIAN USES
   4 FEET 6 INCHES FOR COMBINED BICYCLE AND PEDESTRIAN USES
8. 50LB RAIL LOADING PER IBC, CURRENT EDITION.
9. ALL CONCEALED FASTENERS THROUGHOUT.
10. MILD STEEL.
11. BLACK POWDER COATED.

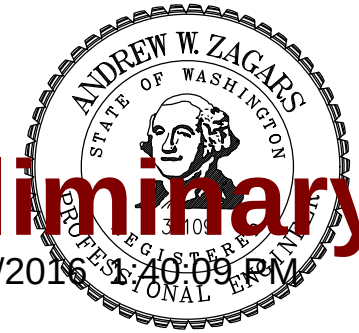

Preliminary

11/09/2016 1:40:09 PM

CITY OF SAMMAMISH
DEPARTMENT OF PUBLIC WORKS

PEDESTRIAN RAILING

APPROVED BY
CITY ENGINEER _____ DATE _____

REV	DWN	CKD	DATE	FILE
	XXX	XXX	AUG-XX-2015	FIG03-15

REV. NO. X

Exhibit 4

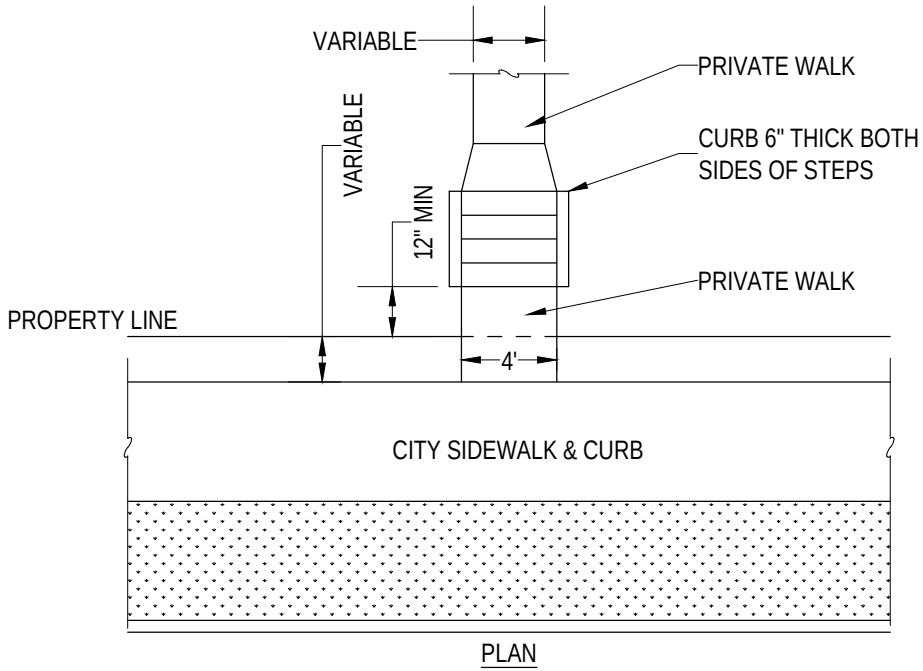

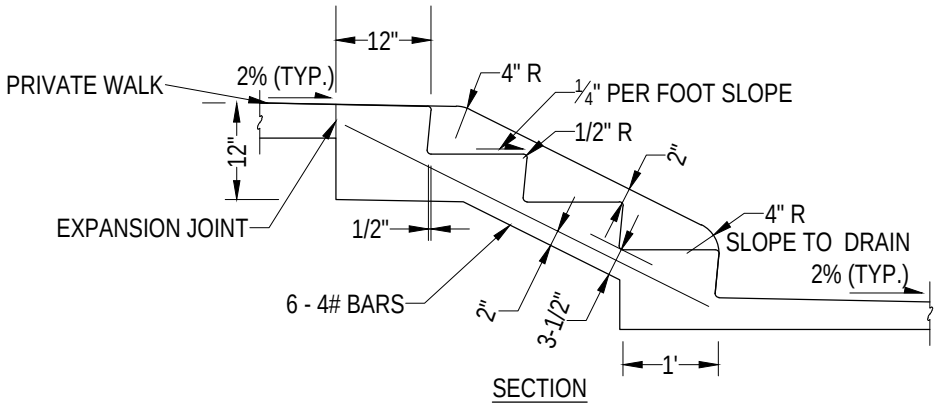

Preliminary

11/09/2016 1:40:13 PM

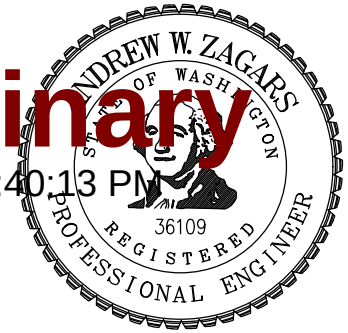

NOTES:

1. STEPS SHALL BE A MINIMUM OF 4'-0" WIDE, CURB TO CURB, PLUS 6" CURBS ON EACH SIDE.
2. CEMENT CONCRETE SHALL BE CLASS 4000psi TROWEL FINISH.
3. NUMBER OF STEPS SHALL SUIT INDIVIDUAL CONDITIONS, WITH TREAD AND RISER DIMENSIONS TO SUIT THE GRADE.
4. RISERS SHALL BE 5" MINIMUM, 7" MAXIMUM: TREAD SHALL BE 11" MINIMUM, 12" MAXIMUM.
5. HANDRAIL REQUIRED ON BOTH SIDES PER IBC.
6. ALL STEPS SHALL BE UNIFORM HEIGHT & DEPTH.

CITY OF SAMMAMISH
DEPARTMENT OF PUBLIC WORKS

STAIRS

APPROVED BY
CITY ENGINEER _____ DATE _____

REV	DWN	CKD	DATE	FILE
	XXX	XXX	AUG-XX-2015	FIG03-16

REV. NO. X

Exhibit 4

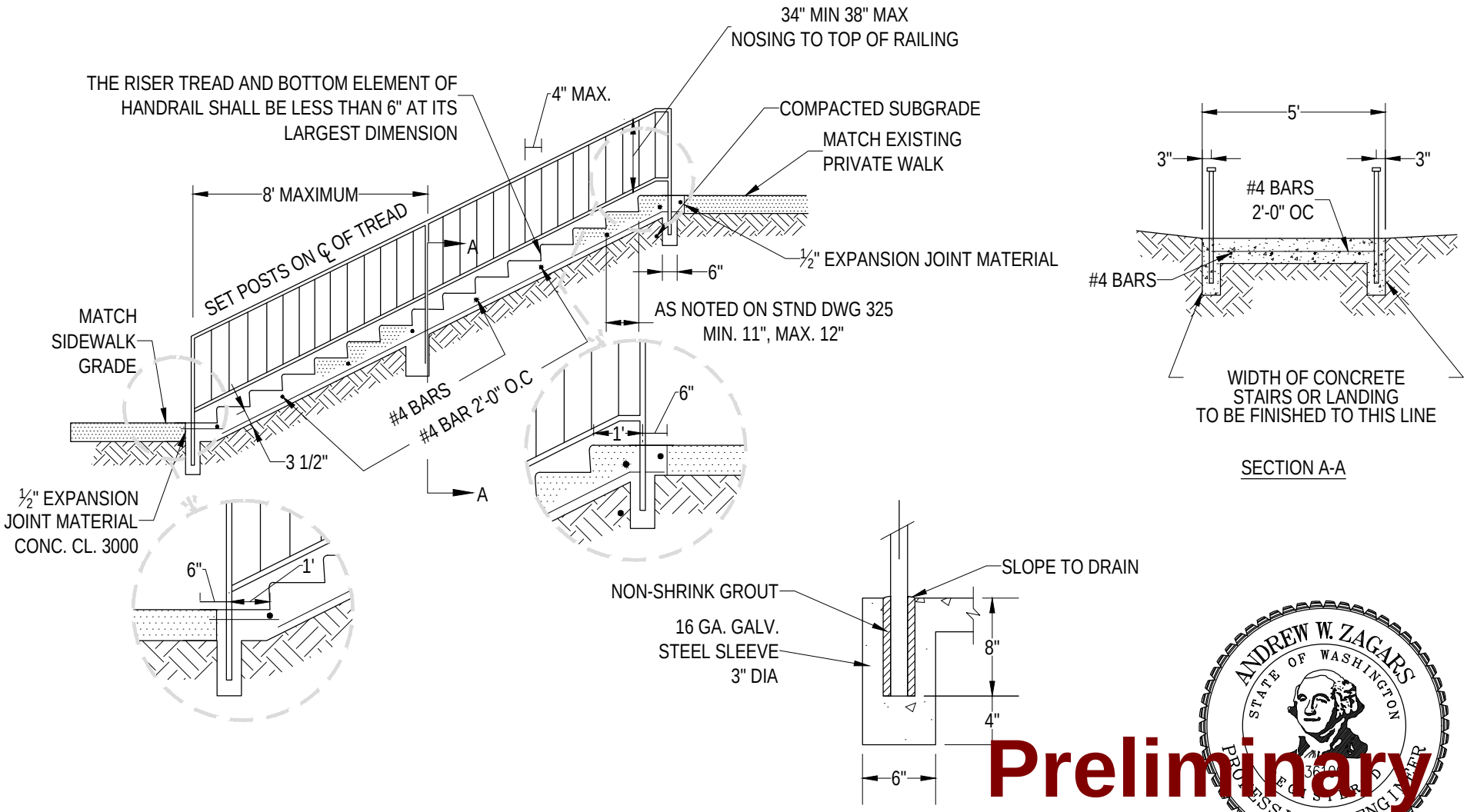

Preliminary

11/09/2016 1:40:15 PM

NOTES:

1. CEMENT CONCRETE STEPS AND CURBS SHALL BE CONSTRUCTED AS SHOWN ON STD DWG 3-16.
2. HEIGHT OF RAILING SHALL BE 36" MINIMUM, 38" MAXIMUM TOP OF NOSING TO TOP OF RAILING.
3. PEDESTRIAN RAILING SHALL BE CONSTRUCTED AS SHOWN ON STD DWG 3-15.
4. CLEAR SPACE BETWEEN BALUSTERS SHALL BE A MAXIMUM OF 4".
5. ALL STEPS SHALL HAVE HANDRAIL ON BOTH SIDES.

CITY OF SAMMAMISH
DEPARTMENT OF PUBLIC WORKS

CEMENT CONCRETE STAIRWAY

APPROVED BY
CITY ENGINEER _____ DATE _____

REV	DWN	CKD	DATE	FILE
	XXX	XXX	AUG-XX-2015	FIG03-17

REV. NO. X

Exhibit 4

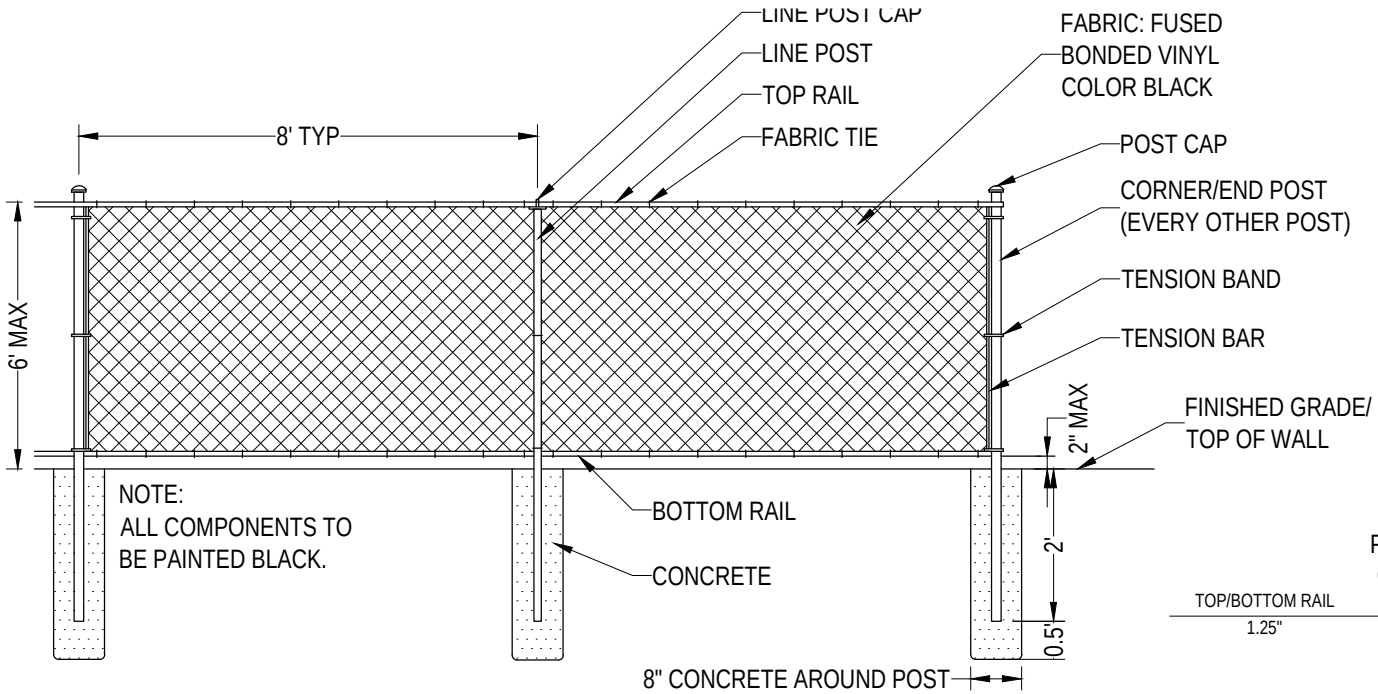

PIPE SCHEDULE
(ALL DIMENSION I.D.)

TOP/BOTTOM RAIL	CORNER/ END POST	LINE POST
1.25"	2.5"	2"

NOTES:

1. RAILING SHALL BE ALUMINUM PIPE RAIL OR APPROVED EQUIVALENT. INSTALLATION PER MANUFACTURER'S RECOMMENDATIONS.
2. SHOP DRAWINGS OF RAILING SHALL BE SUBMITTED FOR APPROVAL SHOWING COMPLETE DIMENSIONS AND DETAILS OF FABRICATION AND INCLUDING AN ERECTION DIAGRAM. MATERIALS BEING USED SHALL BE SPECIFIED IN THE SHOP DRAWINGS.
3. ALL ALUMINUM PARTS SHALL BE GIVEN A BLACK ANODIC COATING AT LEAST 0.0006 INCH THICK AND BE HOT WATER SEALED AND SHALL HAVE A UNIFORM FINISH.
4. WIRE FABRIC SHALL BE GIVEN A BLACK FUSED BONDED VINYL COATING TO MATCH FINISHED POSTS.
5. CUTTING SHALL BE DONE BY SAWING OR MILLING AND ALL CUTS SHALL BE TRUE AND SMOOTH. FLAME CUTTING WILL NOT BE PERMITTED.
6. ALL MATERIALS SHALL BE ADEQUATELY WRAPPED TO ENSURE SURFACE PROTECTION DURING HANDLING AND TRANSPORTATION TO THE JOB SITE.
7. ANY WELDING OF ALUMINUM SHALL BE IN ACCORDANCE WITH THE LATEST AASHTO STANDARD SPECIFICATIONS FOR STRUCTURAL SUPPORTS FOR HIGHWAY SIGNS, LUMINAIRES AND TRAFFIC SIGNALS.
8. RAILS, POSTS AND FORMED ELBOWS SHALL BE A.S.T.M B-241 OR B-429 ALLOY, 6063-T6 SCHEDULE 40 (STD. PIPE). BRACKETS, ENDCAPS AND OTHER FITTINGS SHALL BE A.S.T.M. 6063-T5. SPLICES AND REINFORCING SLEEVES SHALL BE DRAWN ALUMINUM TUBING 6063-T832.
9. TOP OF RAIL: 3 FEET 6 INCHES MIN FOR PEDESTRIAN USES
   4 FEET 6 INCHES MIN FOR COMBINED BICYCLE AND PEDESTRIAN USES

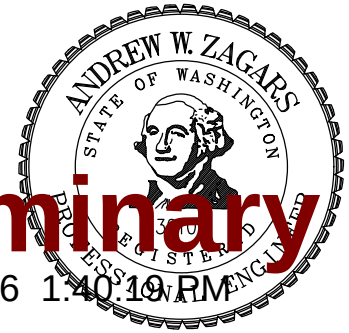

Preliminary

11/09/2016 1:40:19 PM

CITY OF SAMMAMISH
DEPARTMENT OF PUBLIC WORKS

CHAIN LINK FENCE

APPROVED BY
CITY ENGINEER _____ DATE _____

REV	DWN	CKD	DATE	FILE
	XXX	XXX	AUG-XX-2015	FIG03-18

REV. NO. X

Exhibit 4

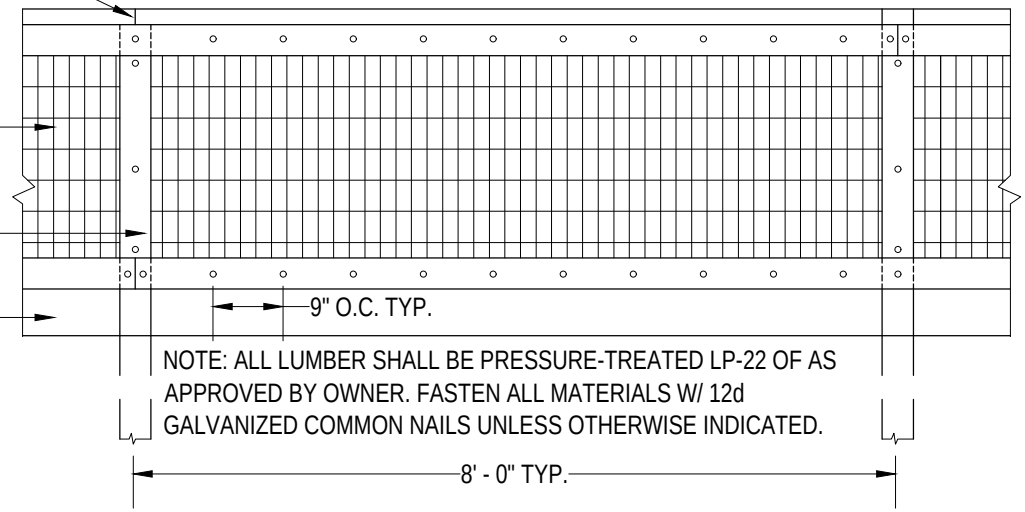

NOTE: ALL LUMBER SHALL BE PRESSURE-TREATED LP-22 OF AS APPROVED BY OWNER. FASTEN ALL MATERIALS W/ 12d GALVANIZED COMMON NAILS UNLESS OTHERWISE INDICATED.

ELEVATION

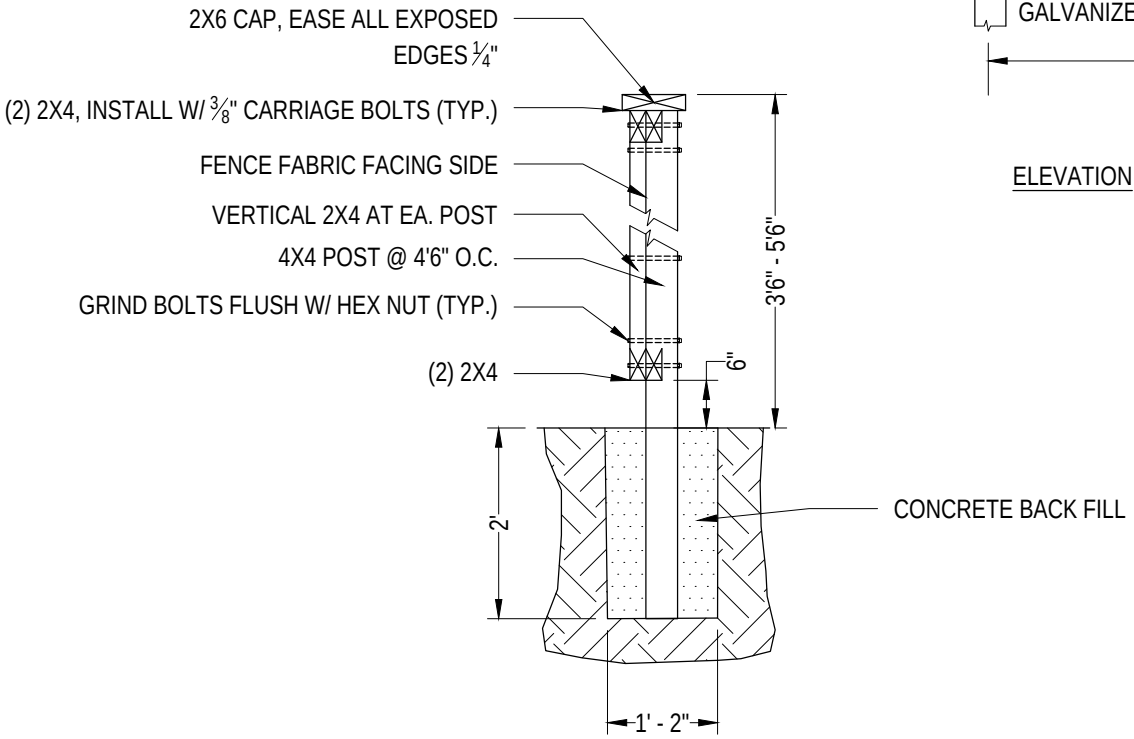

SECTION

NOTE: DIAGONAL BRACE RAILS (4x4) TO BE INSTALLED AT ALL END SECTIONS, TOP OF BRACE AT TOP OF END SECTION/CORNER.

Preliminary

11/09/2016 1:41:33 PM

CITY OF SAMMAMISH DEPARTMENT OF PUBLIC WORKS			
GREENBELT FENCE			
APPROVED BY CITY ENGINEER _____ DATE _____			
REV	DWN XXX	CKD XXX	DATE AUG-XX-2015	FILE FIG03-20

REV. NO. X

Exhibit 4

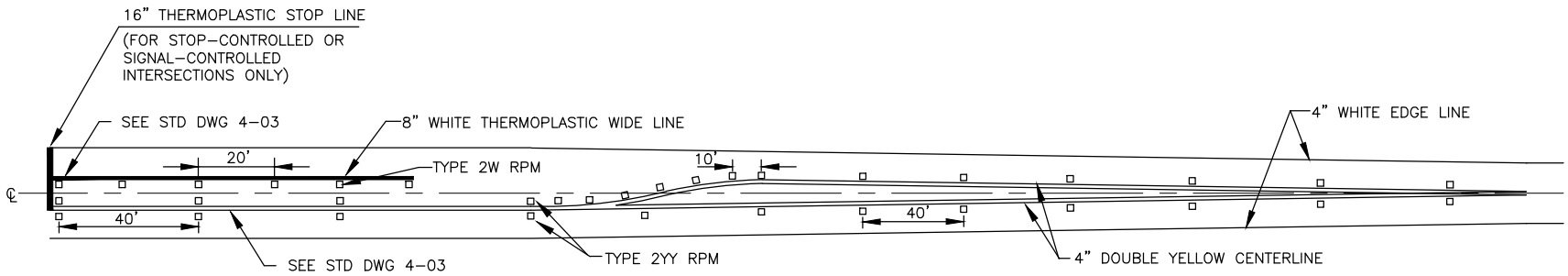

LEFT TURN LANE AND MEDIAN

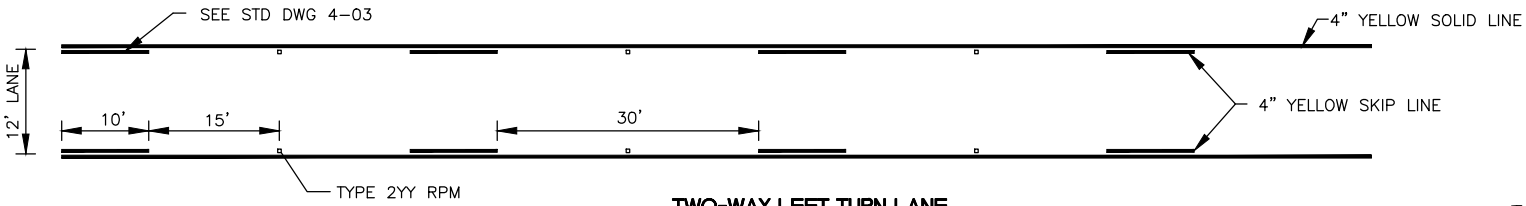

TWO-WAY LEFT TURN LANE

Preliminary
11/09/2016 1:41:38 PM

ANDREW W. ZAGARS
STATE OF WASHINGTON
36109
REGISTERED PROFESSIONAL ENGINEER

CITY OF SAMMAMISH
DEPARTMENT OF PUBLIC WORKS

CHANNELIZATION – LEFT TURN LANES

APPROVED BY
CITY ENGINEER _____ DATE _____

REV	DWN	CKD	DATE	FILE
	XXX	XXX	AUG-XX-2015	FIG04-01

REV. NO. X

Exhibit 4

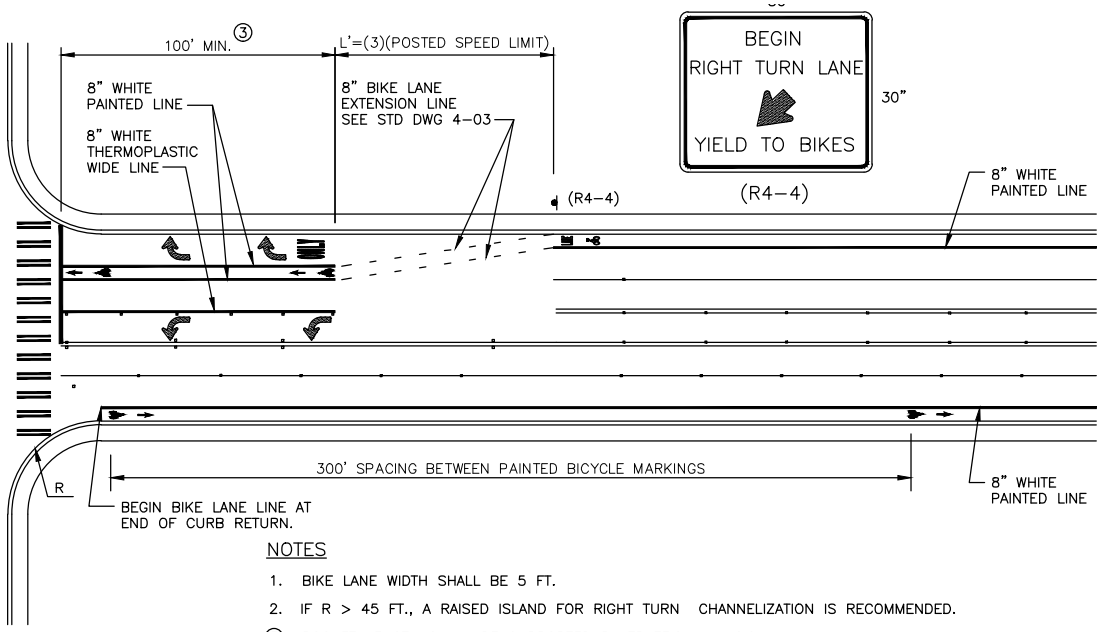

NOTES

1. BIKE LANE WIDTH SHALL BE 5 FT.
2. IF R > 45 FT., A RAISED ISLAND FOR RIGHT TURN CHANNELIZATION IS RECOMMENDED.
3. ③ POCKET LENGTH SHALL BE SUPPORTED BY TRAFFIC ANALYSIS
4. PLACE R3-18 SIGN IF THE BIKE LANE TERMINATES AT OR BEFORE THE APPROACHING INTERSECTION.
5. RIGHT TURN LANES, LEFT TURN LANES, AND TWO-WAY LEFT TURN LANES SHALL BE 12 FT. IN WIDTH.
6. TURN LANE ARROWS SHALL BEGIN AT THE START OF THE TURN LANE AND 40 FT. BEHIND THE STOP LINE. IF NEEDED LONGER LANES MAY BE REQUIRED. ADDITIONAL ARROWS 150 FT. APART.

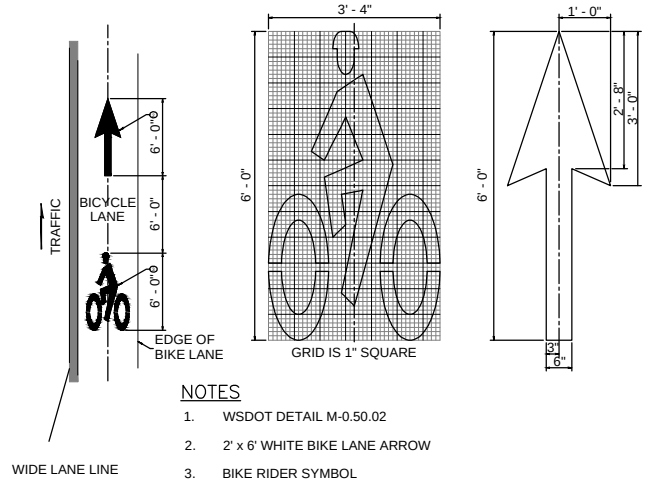

NOTES

1. WSDOT DETAIL M-0.50.02
2. 2' x 6' WHITE BIKE LANE ARROW
3. BIKE RIDER SYMBOL

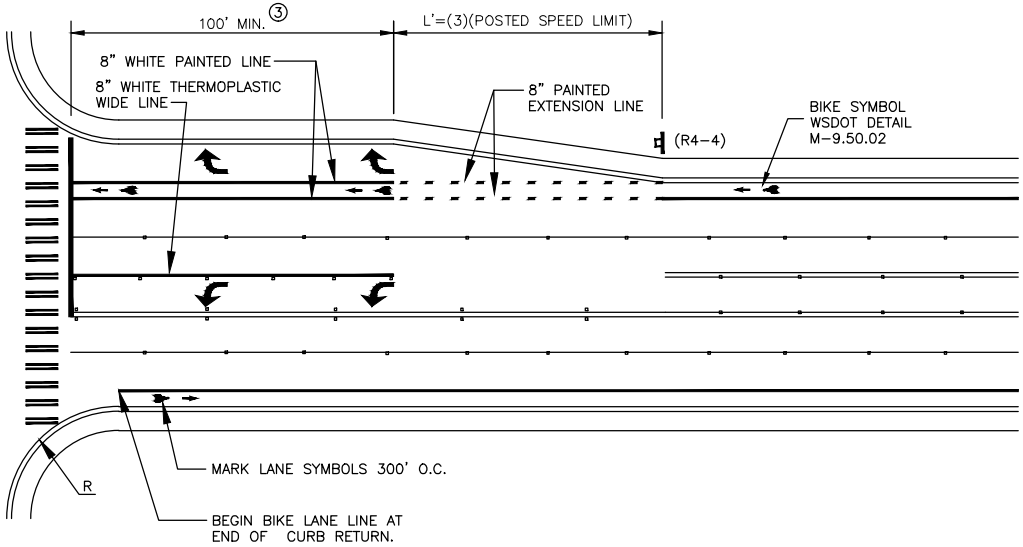

NOT TO SCALE

Preliminary

11/09/2016 1:41:40 PM

ANDREW W. ZAGARS
STATE OF WASHINGTON
36109
REGISTERED PROFESSIONAL ENGINEER

CITY OF SAMMAMISH
DEPARTMENT OF PUBLIC WORKS

CHANNELIZATION – VEHICLE AND BICYCLES

APPROVED BY
CITY ENGINEER _____ DATE _____

REV	DWN	CKD	DATE	FILE
	XXX	XXX	AUG-XX-2015	FIG04-02

REV. NO. X

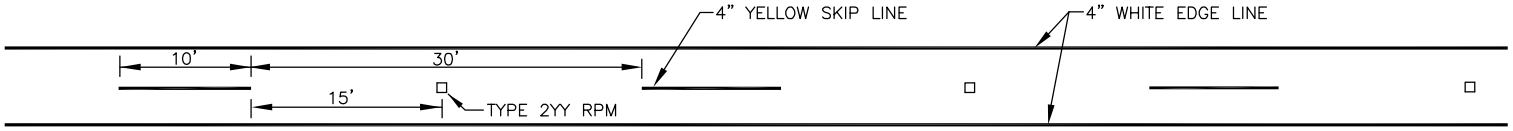

SINGLE LANE TWO-WAY TRAFFIC

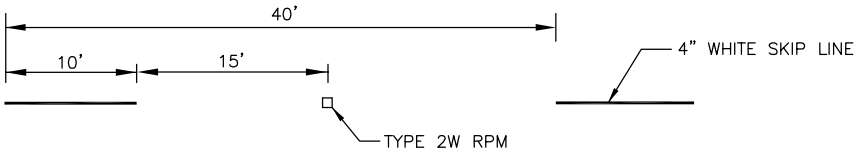

LANE SEPARATION

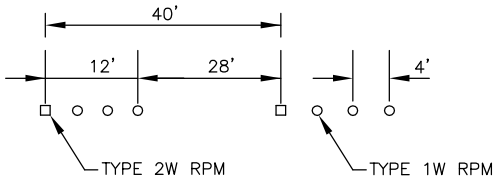

TRAVEL DIRECTION
ALTERNATE LANE MARKINGS

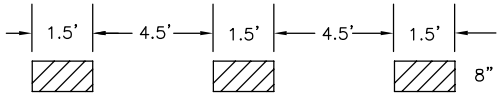

LANE EXTENSION LINE

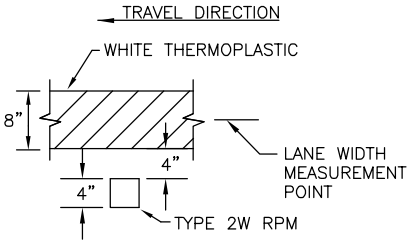

WIDE LINE

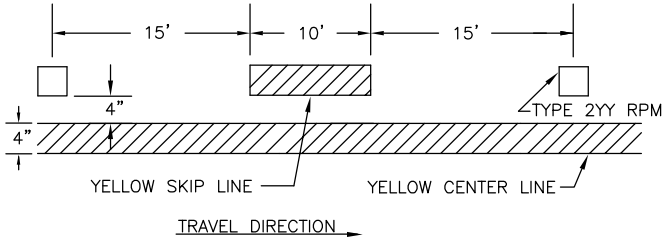

TWO-WAY LEFT TURN LANE

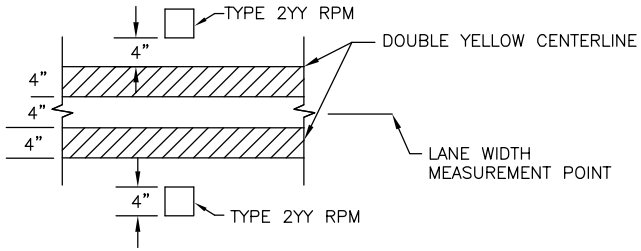

CENTERLINE

Preliminary

11/09/2016 11:41:45 PM

CITY OF SAMMAMISH
DEPARTMENT OF PUBLIC WORKS

PAVEMENT MARKINGS

APPROVED BY
CITY ENGINEER _____ DATE _____

REV	DWN	CKD	DATE	FILE
	XXX	XXX	AUG-XX-2015	FIG04-03A

REV. NO. X

Exhibit 4

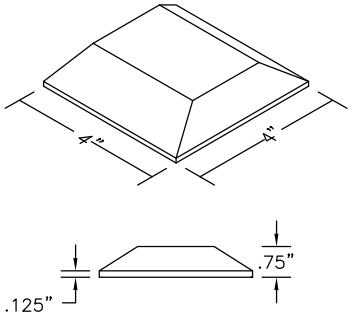

TYPE 2 RPM

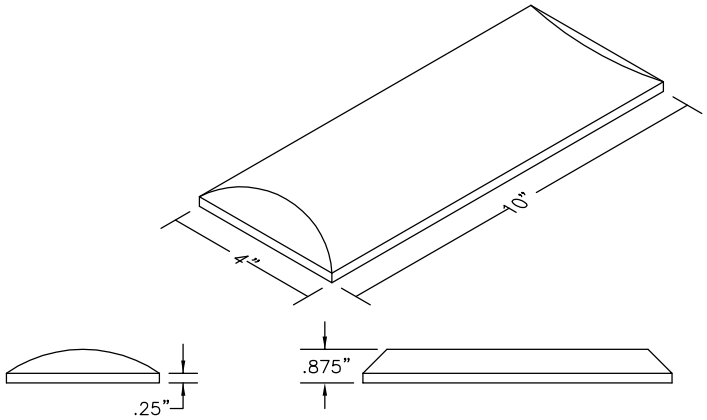

TYPE 3 RPM

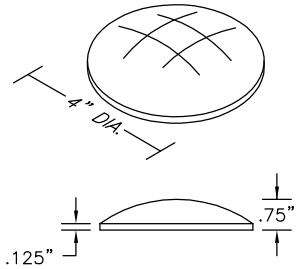

TYPE 1 RPM

RAISED PAVEMENT MARKER COLORS	
TYPE 1W	NONREFLECTORIZED WHITE
TYPE 1Y	NONREFLECTORIZED YELLOW
TYPE 2W	REFLECTORIZED WHITE – ONE SIDE ONLY
TYPE 2Y	REFLECTORIZED YELLOW – ONE SIDE ONLY
TYPE 2YY	REFLECTORIZED YELLOW – BOTH SIDES

Preliminary
11/09/2016 1:41:49 PM

CITY OF SAMMAMISH
DEPARTMENT OF PUBLIC WORKS

RAISED PAVEMENT MARKERS

APPROVED BY
CITY ENGINEER _____ DATE _____

REV	DWN	CKD	DATE	FILE
	XXX	XXX	AUG-XX-2015	FIG04-03B

REV. NO. X

Exhibit 4

Exhibit 4

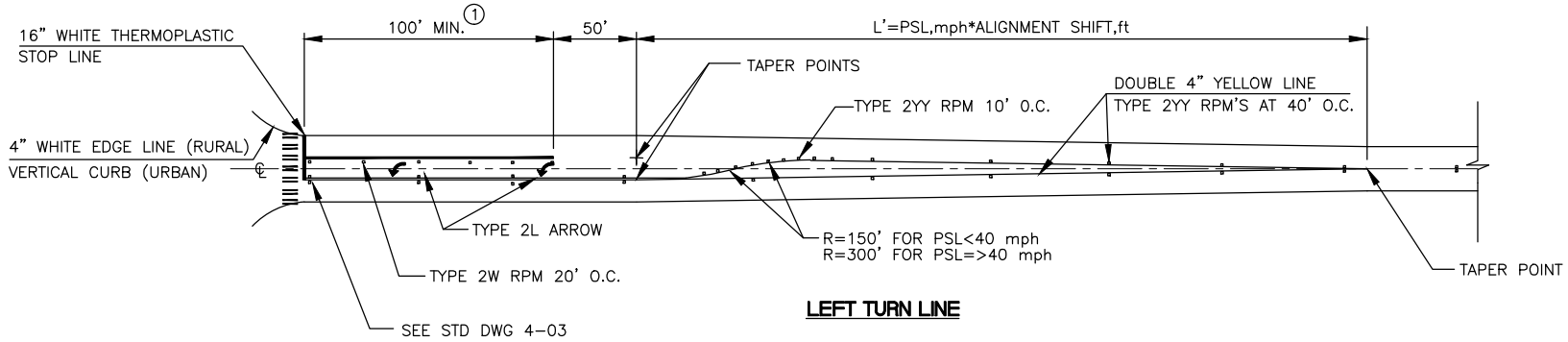

LEFT TURN LINE

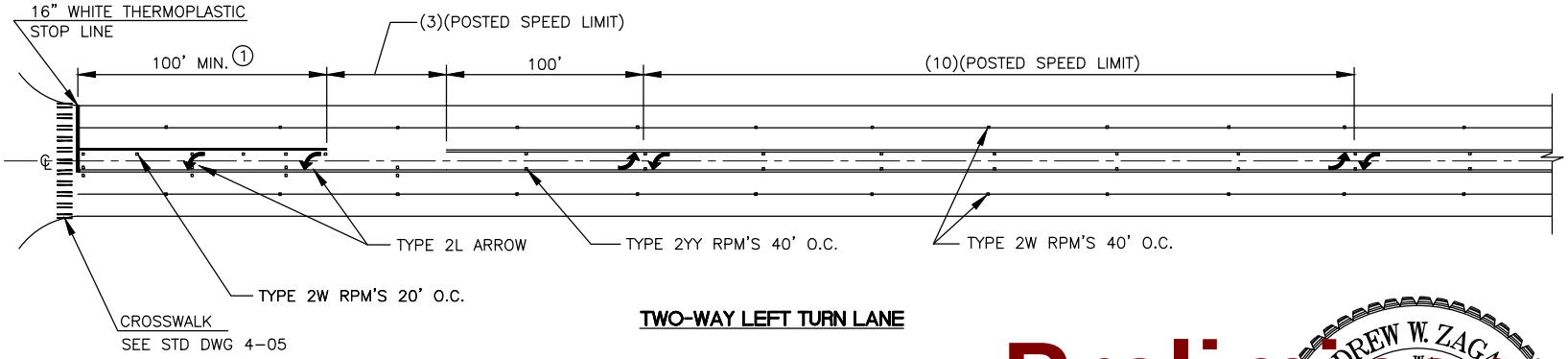

TWO-WAY LEFT TURN LANE

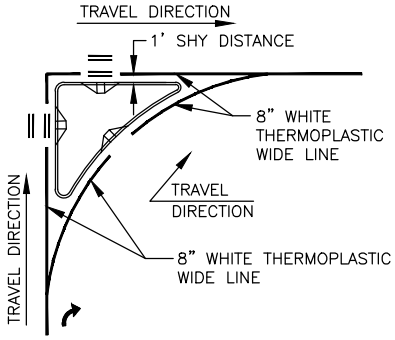

ISLAND LINE DETAIL
(RAISED ISLAND IS OPTIONAL)

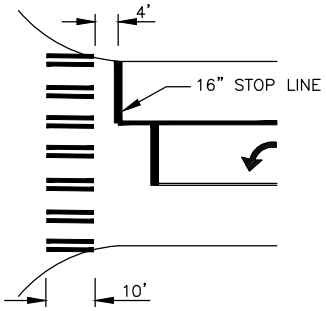

CROSSWALK AND STOP LINE

NOTES

① POCKET LENGTHS SHALL BE SUPPORTED BY TRAFFIC ANALYSIS.

PSL = POSTED SPEED LIMIT

Preliminary
11/09/2016 1:41:53 PM

CITY OF SAMMAMISH
DEPARTMENT OF PUBLIC WORKS

INTERSECTION APPROACH STRIPING

APPROVED BY
CITY ENGINEER _____ DATE _____

REV	DWN	CKD	DATE	FILE
	XXX	XXX	AUG-XX-2015	FIG04-04

REV. NO. X

Exhibit 4

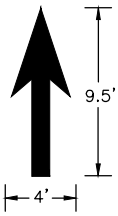

TYPE 1
THRU ARROW

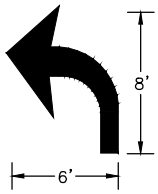

TYPE 2L
LEFT TURN ARROW

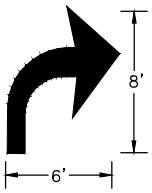

TYPE 2R
RIGHT TURN ARROW

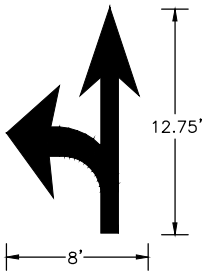

TYPE 3L
LEFT/THRU ARROW

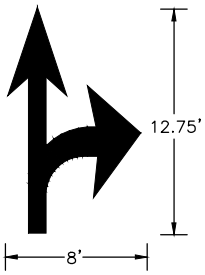

TYPE 3R
RIGHT/THRU ARROW

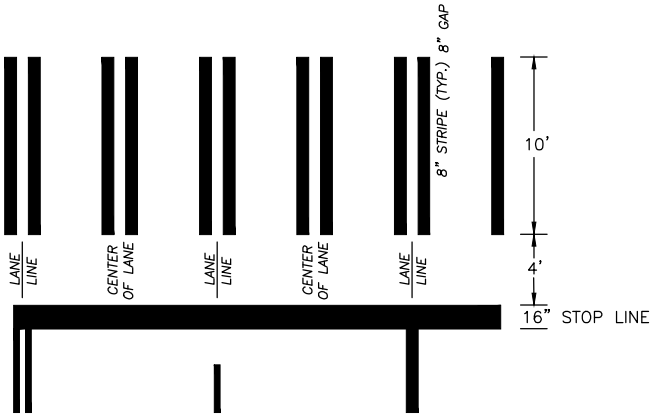

CROSSWALK STRIPING

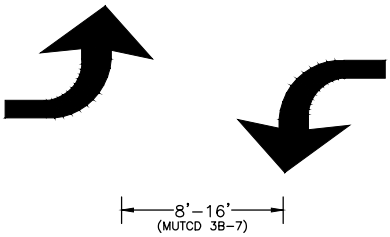

TWO WAY LEFT TURN LANE
ARROW SPACING

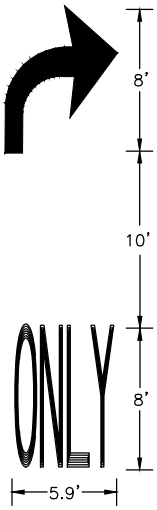

DROP LANE

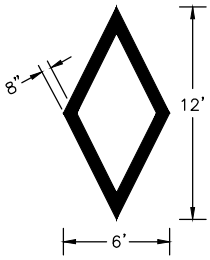

HIGH OCCUPANCY VEHICLE (HOV)

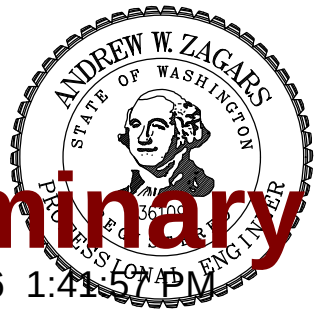

Preliminary

11/09/2016 1:41:57 PM

NOTES

1. ALL PAVEMENT SYMBOLS SHALL BE THERMOPLASTIC.

CITY OF SAMMAMISH
DEPARTMENT OF PUBLIC WORKS

PAVEMENT SYMBOLS

APPROVED BY
CITY ENGINEER _____ DATE _____

REV	DWN	CKD	DATE	FILE
	XXX	XXX	AUG-XX-2015	FIG04-05

REV. NO. X

Exhibit 4

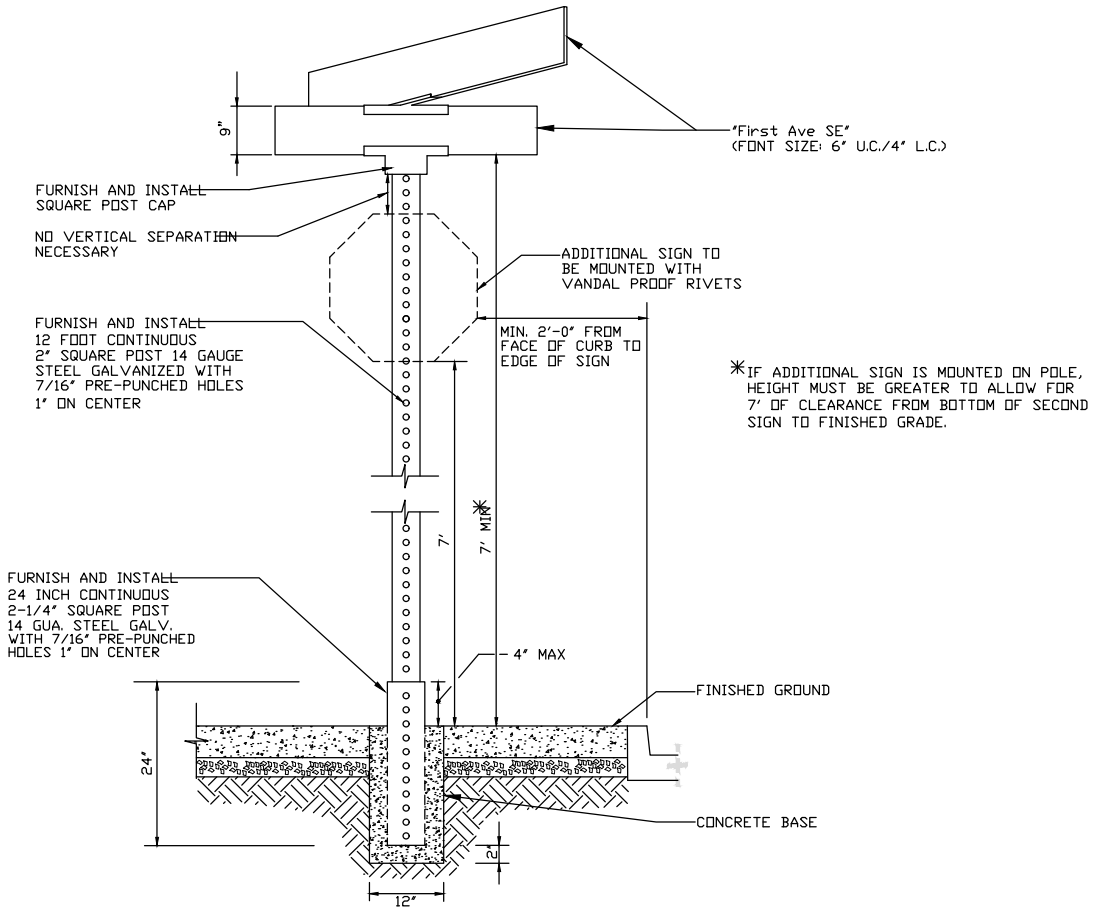

STREET SIGN INSTALLATION DETAIL

NOT TO SCALE

NOTES:

1. ALL EXISTING SIGNS THAT ARE TO BE RELOCATED SHALL BE INSTALLED ON NEW POSTS AND HARDWARE.
2. 2" TELESPARE GALVANIZED POSTS
3. 2 1/4" TELESPARE GALVANIZED ANCHORS, 24" LONG
4. SET ANCHORS 20" DEEP, WRAP ANCHORS AND SET IN CONCRETE. BOLTS TO BE 2" ABOVE FINISHED GRADE
5. SIGNS TO BE V.I.P. (DIAMOND GRADE)
6. SIGNS TO BE ATTACHED WITH VANDAL PROOF RIVETS
7. D-3'S TO BE E.G. BACKGROUND DIAMOND GRADE LETTERING
8. D-3'S TO BE MOUNTED WITH ALUMINUM CAPS AND CROSS BRACKETS
9. WHITE LEGEND ON GREEN BACKGROUND

Preliminary

11/09/2016 1:42:00 PM

CITY OF SAMMAMISH
DEPARTMENT OF PUBLIC WORKS

STREET SIGN INSTALLATION

APPROVED BY
CITY ENGINEER _____ DATE _____

REV	DWN	CKD	DATE	FILE
	XXX	XXX	AUG-XX-2015	FIG04-06

REV. NO. X

Exhibit 4

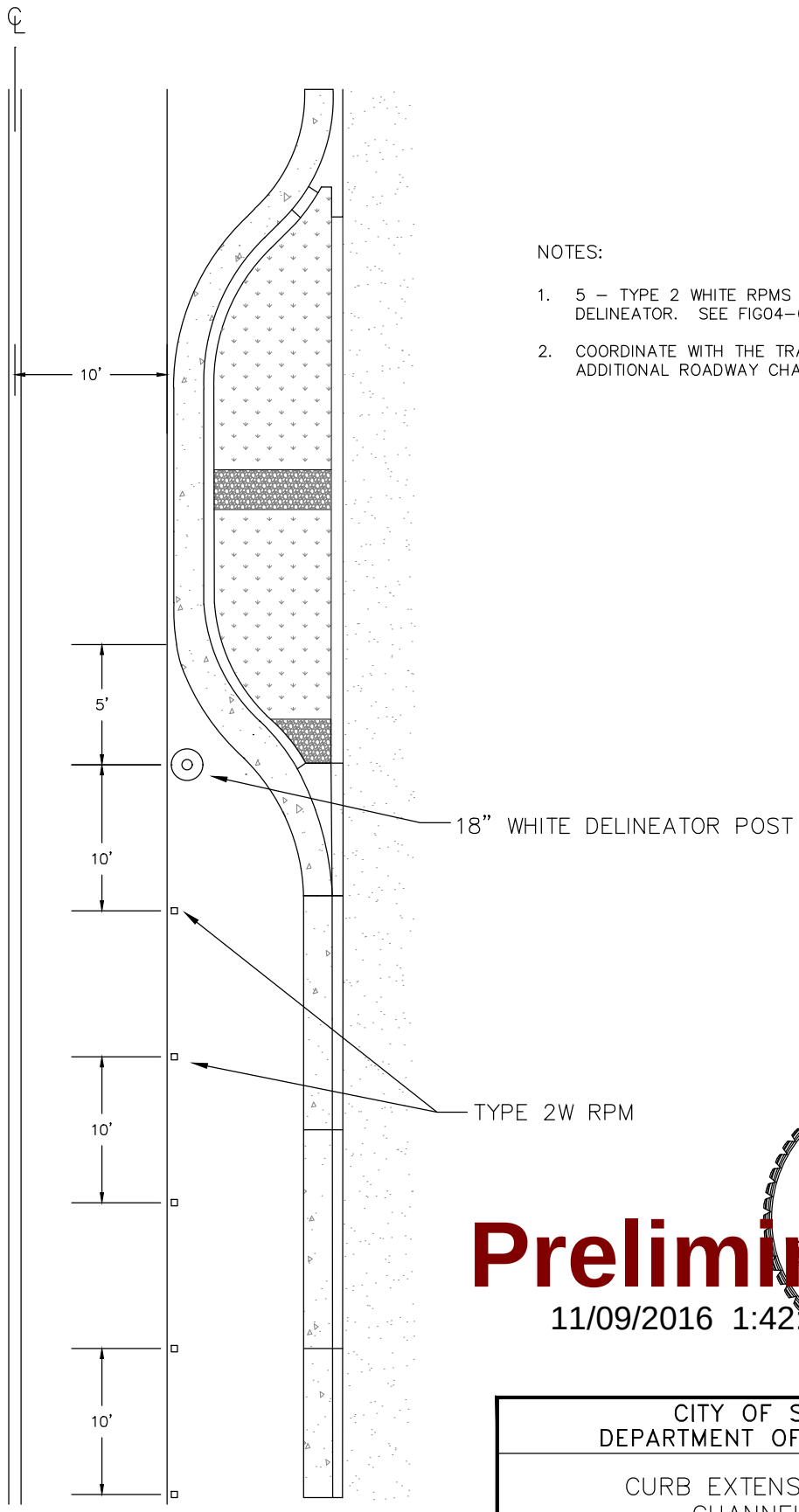

NOTES:

1. 5 – TYPE 2 WHITE RPMS (10' O.C.) FOLLOWING THE DELINEATOR. SEE FIG04–03B FOR RMP DIMENSIONS.
2. COORDINATE WITH THE TRAFFIC ENGINEER ABOUT ADDITIONAL ROADWAY CHANNELIZATION.

– NOT TO SCALE –

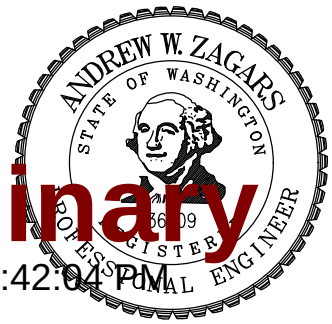

Preliminary

11/09/2016 1:42:04 PM

CITY OF SAMMAMISH
DEPARTMENT OF PUBLIC WORKS

CURB EXTENSION/CHICANE CHANNELIZATION

APPROVED BY
CITY ENGINEER _____ DATE _____

REV	DWN	CKD	DATE	FILE
	LG		NOV–9–2016	FIG04–07

Exhibit 4

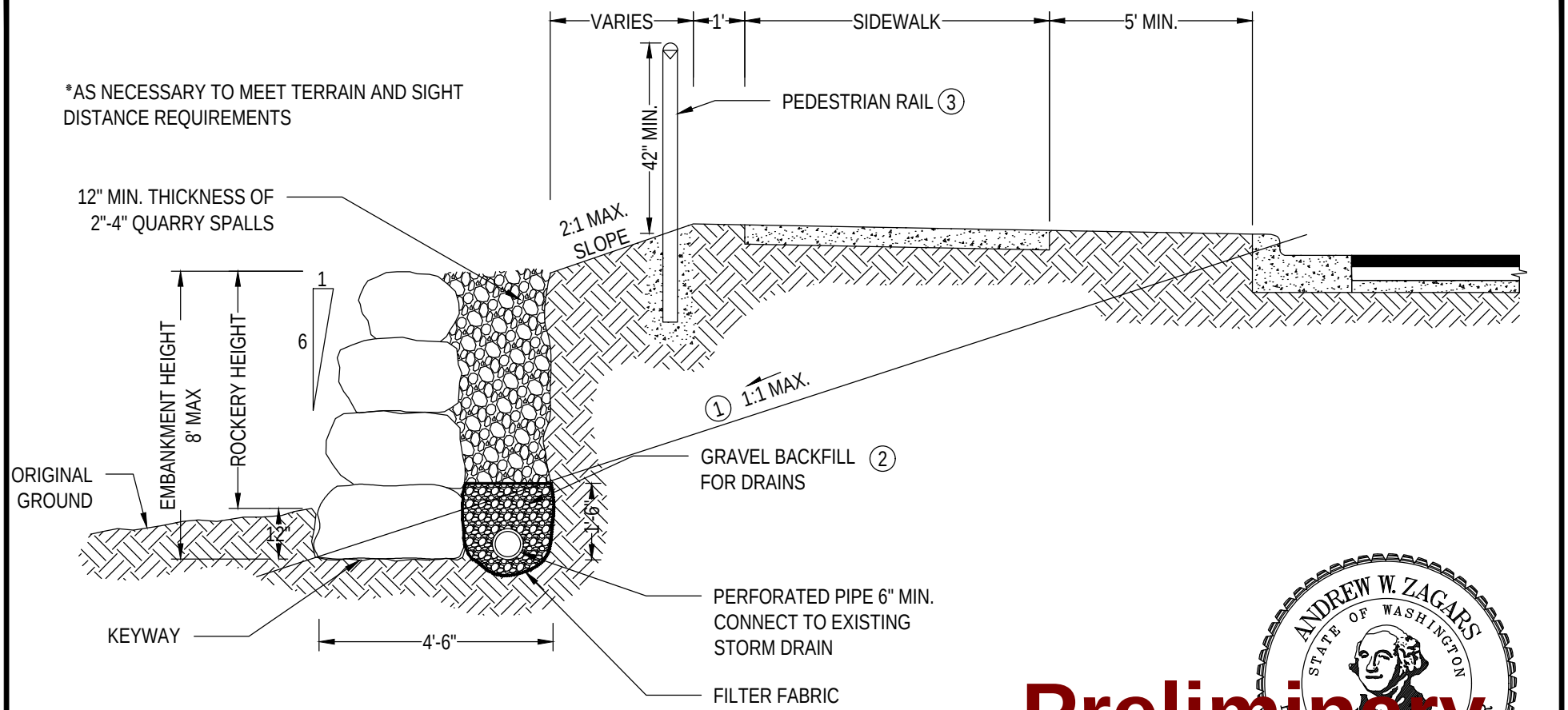

Preliminary

11/09/2016 1:42:06 PM

NOTES:

1. FLATTER SLOPE MAY BE REQUIRED IN LESS STABLE SOIL.
2. SEE WSDOT/APWA STD SPECIFICATION 9-03.12[4].
3. A PEDESTRIAN RAIL, PER STD DWG 3-15, IS REQUIRED WHEN ROCKERY HEIGHT IS 2'-6" OR GREATER. THE USAGE OF A CHAIN LINK FENCE MAY BE APPROVED.
4. TRAFFIC BARRIERS MAY BE REQUIRED ON ROADS WITH SPEED LIMITS OF 30 MPH OR GREATER, WHERE ROCKERY HEIGHTS EXCEED 6'. SEE CHAPTER 1610 OF THE CURRENT WSDOT DESIGN MANUAL.
5. ALL ROCKERIES OVER 4' IN HEIGHT ON PUBLIC OR PRIVATE PROPERTY SHALL REQUIRE STRUCTURAL REVIEW.

CITY OF SAMMAMISH
DEPARTMENT OF PUBLIC WORKS

ROCK FACING – FILL SECTION

APPROVED BY
CITY ENGINEER _____ DATE _____

REV	DWN	CKD	DATE	FILE
	XXX	XXX	AUG-XX-2015	FIG05-01

REV. NO. X

Exhibit 4

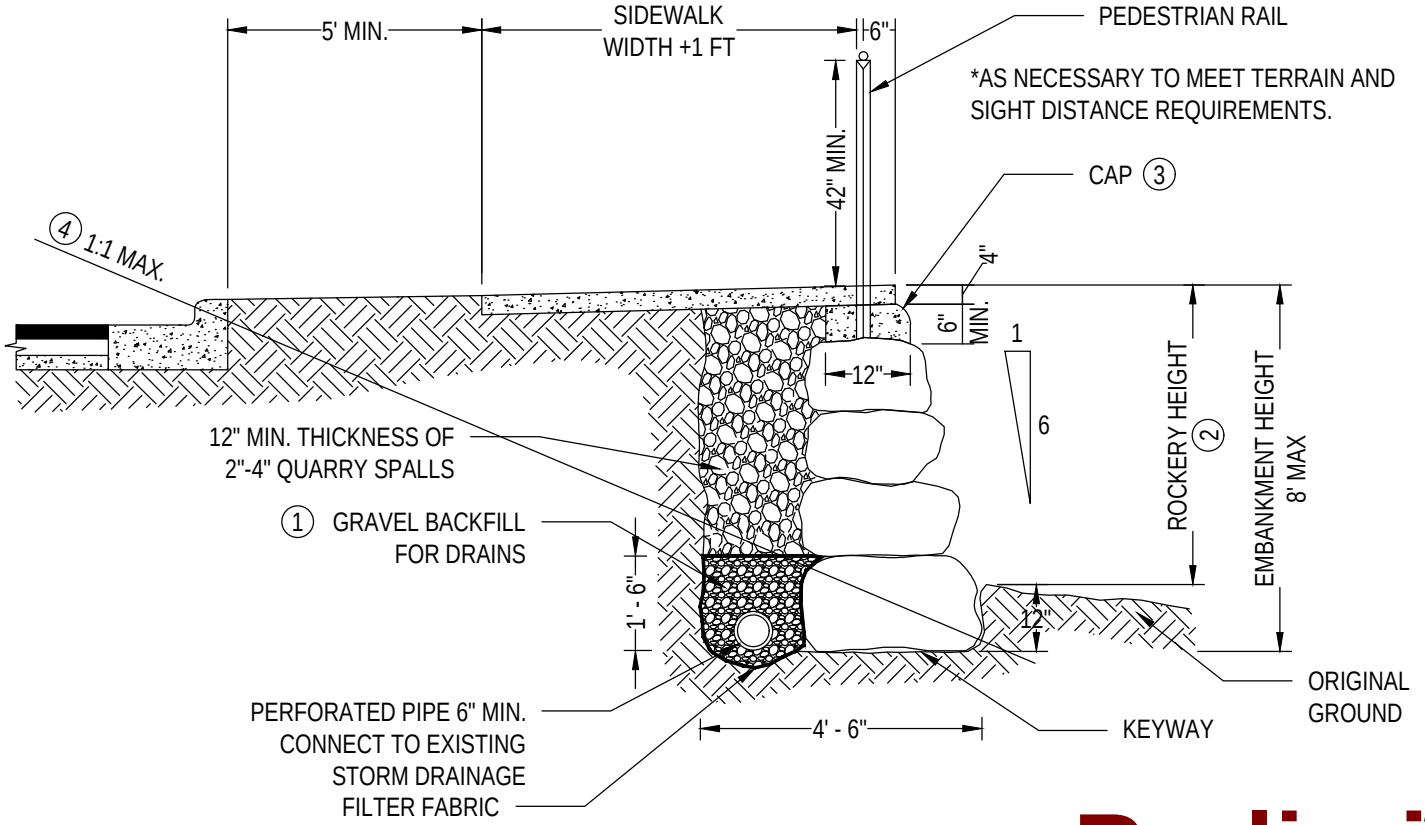

Preliminary

11/09/2016 1:42:09 PM

NOTES:

1. WSDOT/APWA STD SPECIFICATION 9-03.12[4].
2. A PEDESTRIAN RAIL, PER STD DWG 3-15, IS REQUIRED WHEN ROCKERY HEIGHT IS 2'-6"' OR GREATER. THE USAGE OF A CHAIN LINK FENCE MAY BE APPROVED.
3. CAP SHALL BE CONCRETE CLASS 3000.
4. FLATTER SLOPE MAY BE REQUIRED IN LESS STABLE SOILS.
5. TRAFFIC BARRIERS MAY BE REQUIRED ON ROADS WITH SPEED LIMITS OF 30 MPH OR GREATER, WHERE HEIGHTS EXCEED 6'. SEE CHAPTER 1610 OF THE CURRENT WSDOT DESIGN MANUAL.
6. ALL ROCKERIES OVER 4' IN HEIGHT ON PUBLIC OR PRIVATE PROPERTY SHALL REQUIRE STRUCTURAL REVIEW.

CITY OF SAMMAMISH
DEPARTMENT OF PUBLIC WORKS

ROCK FACING UNDER SIDEWALK

APPROVED BY
CITY ENGINEER _____ DATE _____

REV	DWN	CKD	DATE	FILE
	XXX	XXX	AUG-XX-2015	FIG05-02

REV. NO. X

Exhibit 4

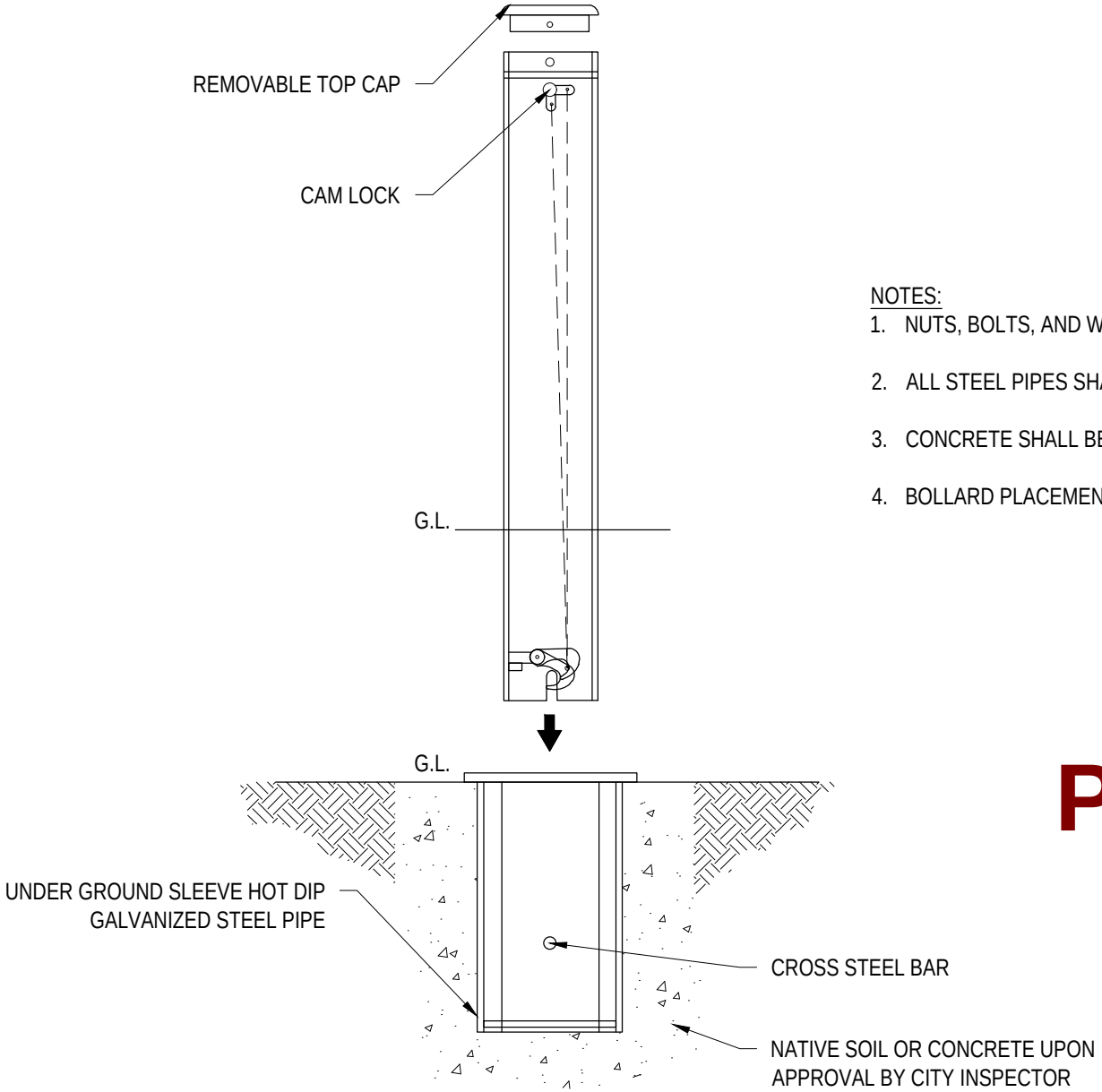

NOTES:

1. NUTS, BOLTS, AND WASHERS CONFORM TO ASTM A307.
2. ALL STEEL PIPES SHALL BE GALVANIZED.
3. CONCRETE SHALL BE CLASS C.
4. BOLLARD PLACEMENT SHALL BE APPROVED BY THE DIRECTOR OR DESIGNEE.

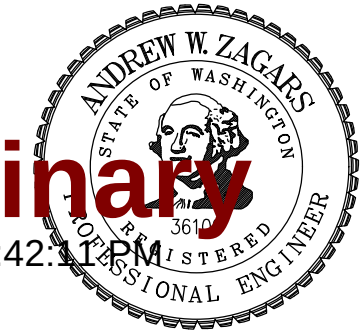

Preliminary

11/09/2016 1:42:11PM

CITY OF SAMMAMISH DEPARTMENT OF PUBLIC WORKS			
BOLLARDS			
APPROVED BY CITY ENGINEER _____ DATE _____			
REV	DWN XXX	CKD XXX	DATE AUG-XX-2015	FILE FIG05-03

REV. NO. X

Exhibit 4

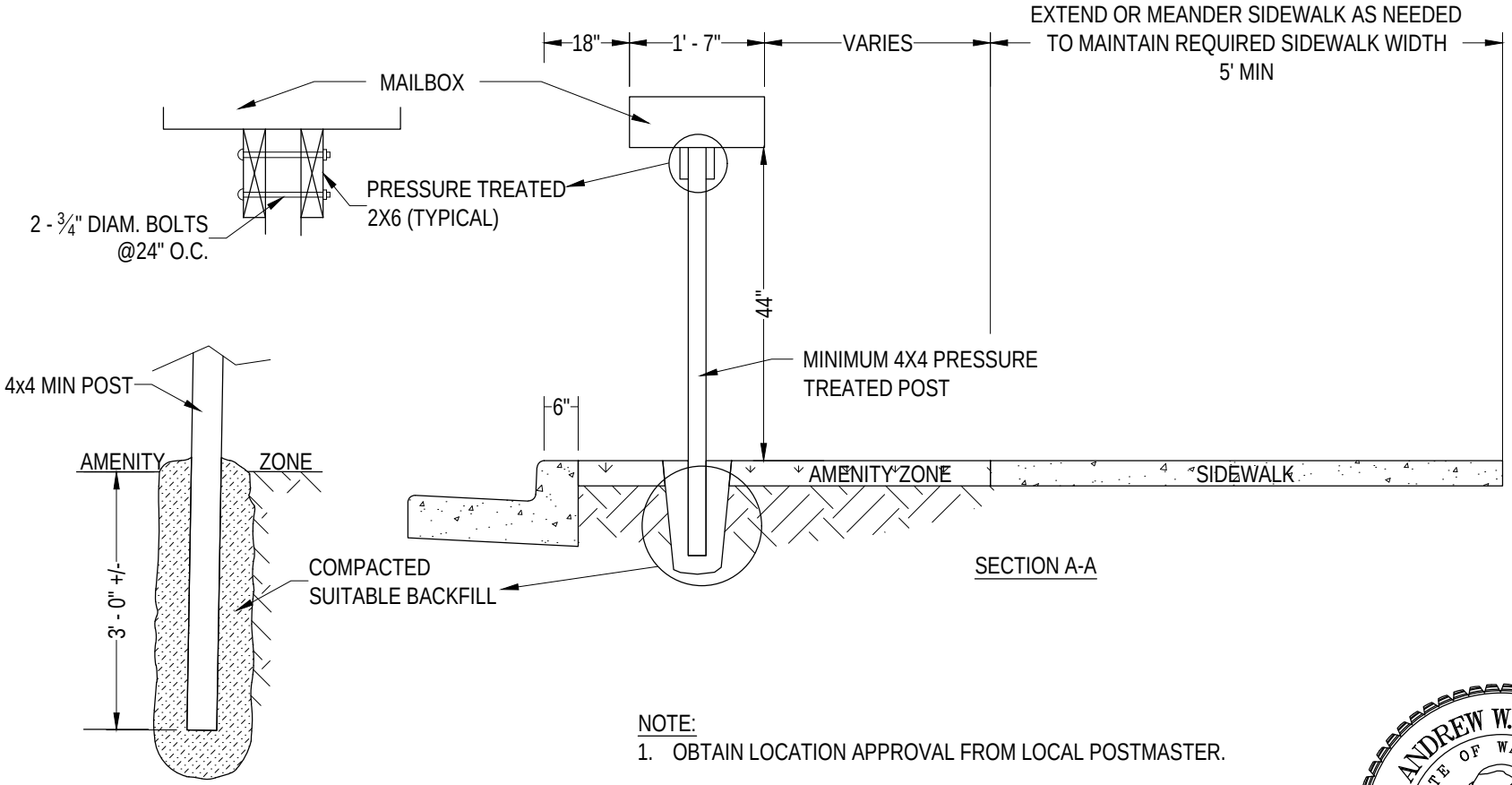

NOTE:

1. OBTAIN LOCATION APPROVAL FROM LOCAL POSTMASTER.

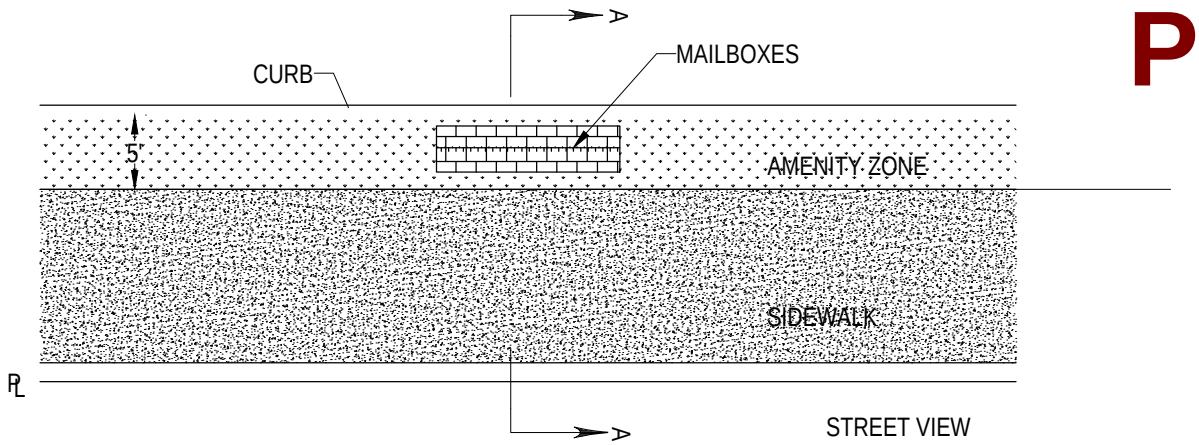

Preliminary

11/09/2016 1:42:14 PM

ANDREW W. ZAGARS
STATE OF WASHINGTON
36109
REGISTERED
PROFESSIONAL ENGINEER

CITY OF SAMMAMISH DEPARTMENT OF PUBLIC WORKS	
MAILBOX STAND NON–ARTERIAL	
APPROVED BY CITY ENGINEER _____ DATE _____	

REV	DWN	CKD	DATE	FILE
	XXX	XXX	AUG–XX–2015	FIG05–04

REV. NO. X

Exhibit 4

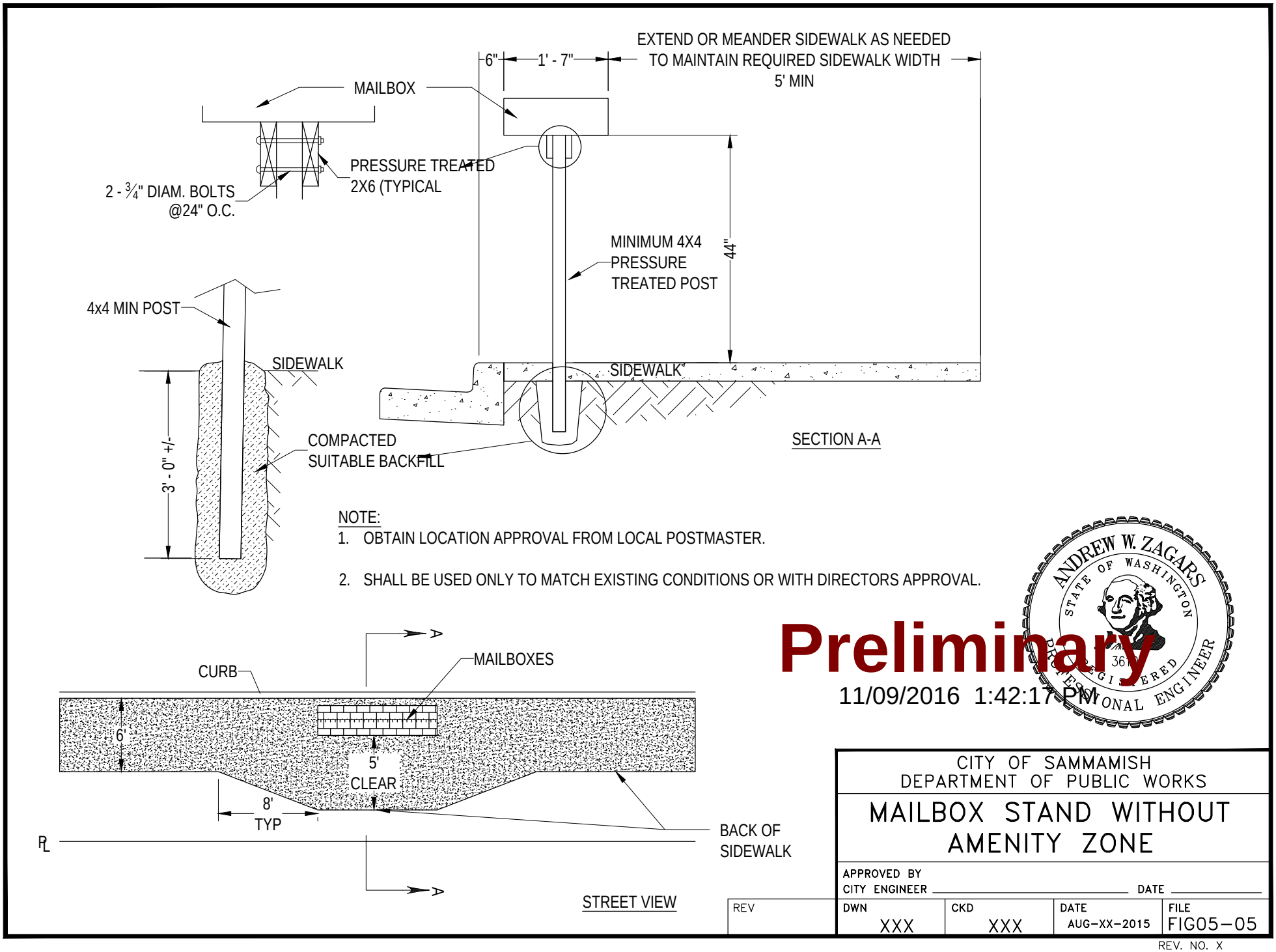
EXTEND OR MEANDER SIDEWALK AS NEEDED
TO MAINTAIN REQUIRED SIDEWALK WIDTH
5' MIN
6"
1' - 7"
MAILBOX
PRESSURE TREATED
2X6 (TYPICAL
2 - ¾" DIAM. BOLTS
@24" O.C.
MINIMUM 4X4
PRESSURE
TREATED POST
44"
4x4 MIN POST
SIDEWALK
SIDEWALK
3' - 0" +/-
COMPACTED
SUITABLE BACKFILL
SECTION A-A
NOTE:
1. OBTAIN LOCATION APPROVAL FROM LOCAL POSTMASTER.
2. SHALL BE USED ONLY TO MATCH EXISTING CONDITIONS OR WITH DIRECTORS APPROVAL.
A
MAILBOXES
CURB
6'
5'
CLEAR
8'
TYP
BACK OF
SIDEWALK
PL
A
STREET VIEW
ANDREW W. ZAGARS
STATE OF WASHINGTON
36
REGISTERED
PROFESSIONAL ENGINEER
Preliminary
11/09/2016 1:42:17 PM
CITY OF SAMMAMISH
DEPARTMENT OF PUBLIC WORKS
MAILBOX STAND WITHOUT
AMENITY ZONE
APPROVED BY
CITY ENGINEER
DATE
REV
DWN
XXX
CKD
XXX
DATE
AUG-XX-2015
FILE
FIG05-05
REV. NO. X

Exhibit 4

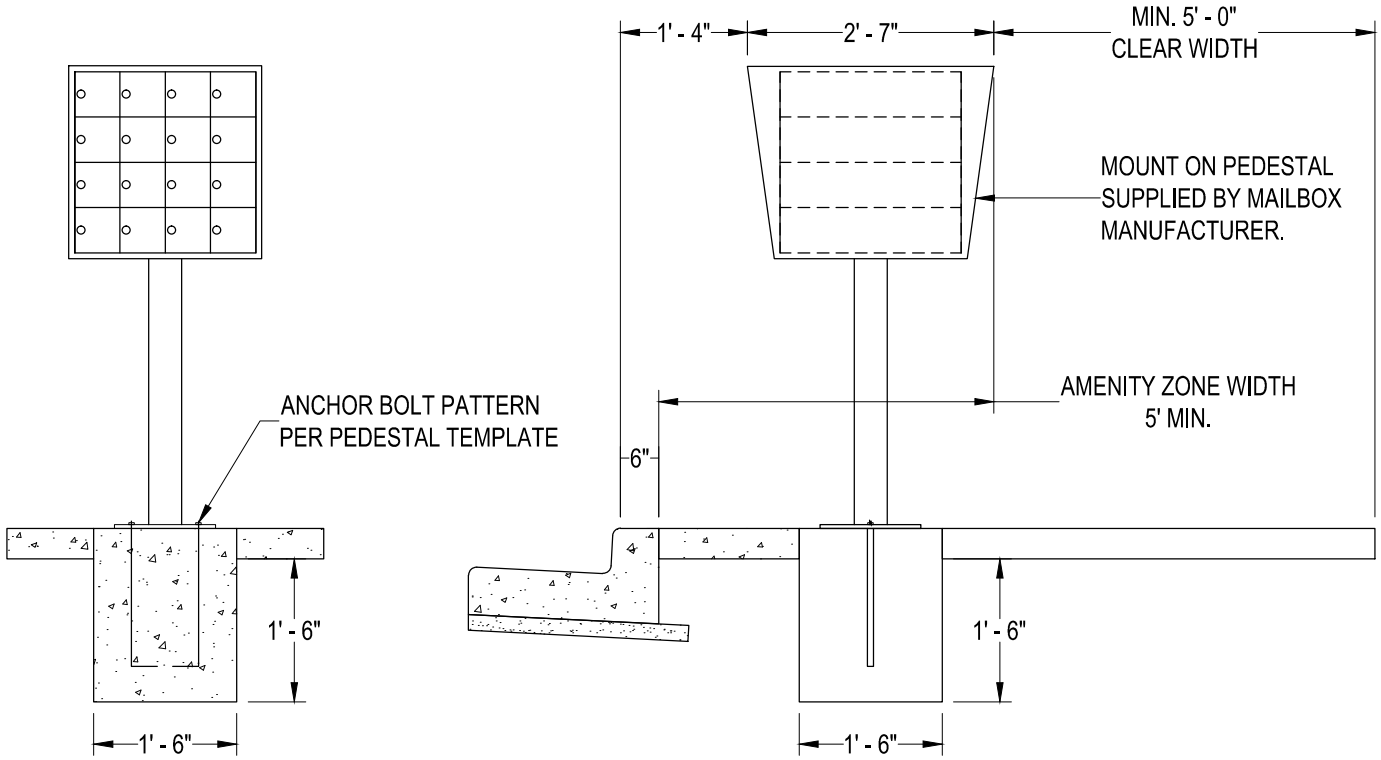

FRONT VIEW

SIDE VIEW

Preliminary

11/09/2016 1:42:19 PM

NOTES:

1. OBTAIN LOCATION APPROVAL FROM LOCAL POSTMASTER.
2. USE PEDESTAL MOUNTED 4C MAILBOX.

CITY OF SAMMAMISH
DEPARTMENT OF PUBLIC WORKS

NEIGHBORHOOD DELIVERY & COLLECTION BOX UNIT INSTALLATION

APPROVED BY
CITY ENGINEER _____ DATE _____

REV	DWN	CKD	DATE	FILE
	XXX	XXX	AUG-XX-2015	FIG05-06

REV. NO. X

Exhibit 4

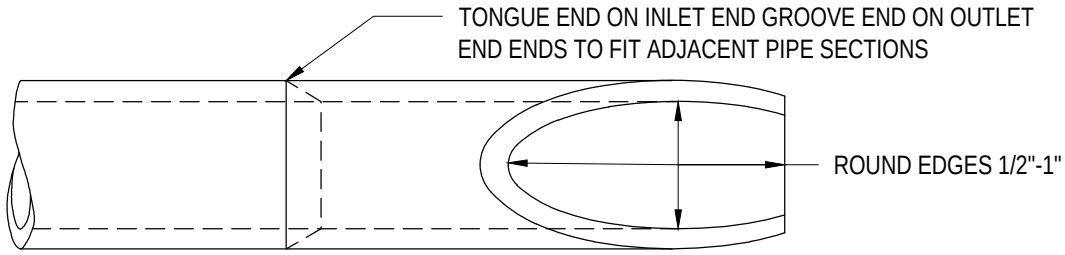

PLAN

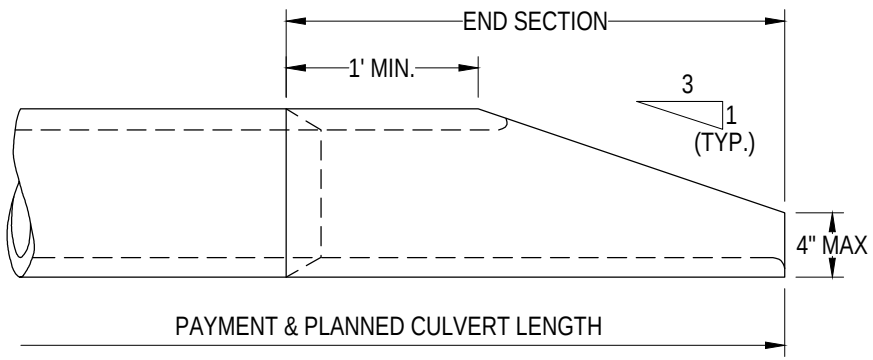

ELEVATION CONCRETE PIPE

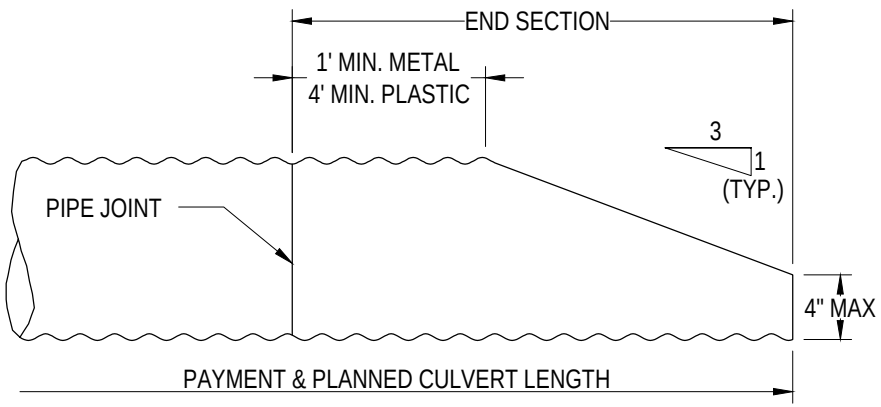

METAL & PLASTIC PIPE

NOTES:

1. SIDE SLOPE SHALL BE WARPED TO MATCH THE BEVELED PIPE END. WHEN CULVERT IS ON SKEW, BEVELED END SHALL BE ROTATED TO CONFORM TO SLOPE. IF SLOPE DIFFERS FROM 3:1, PIPE SHALL BE BEVELED TO MATCH SLOPE.
2. TRASH RACK MAY BE REQUIRED BY DIRECTOR OR DESIGNEE. (SEE STD DWG 7-02 FOR DETAILS).
3. INLET/OUTLET PROTECTION SHALL BE REQUIRED.

Preliminary

11/09/2016 1:42:22 PM

CITY OF SAMMAMISH DEPARTMENT OF PUBLIC WORKS			
BEVELED END PIPE SECTION			
APPROVED BY CITY ENGINEER _____ DATE _____			
REV	DWN XXX	CKD XXX	DATE AUG-XX-2015	FILE FIG07-01

REV. NO. X

Exhibit 4

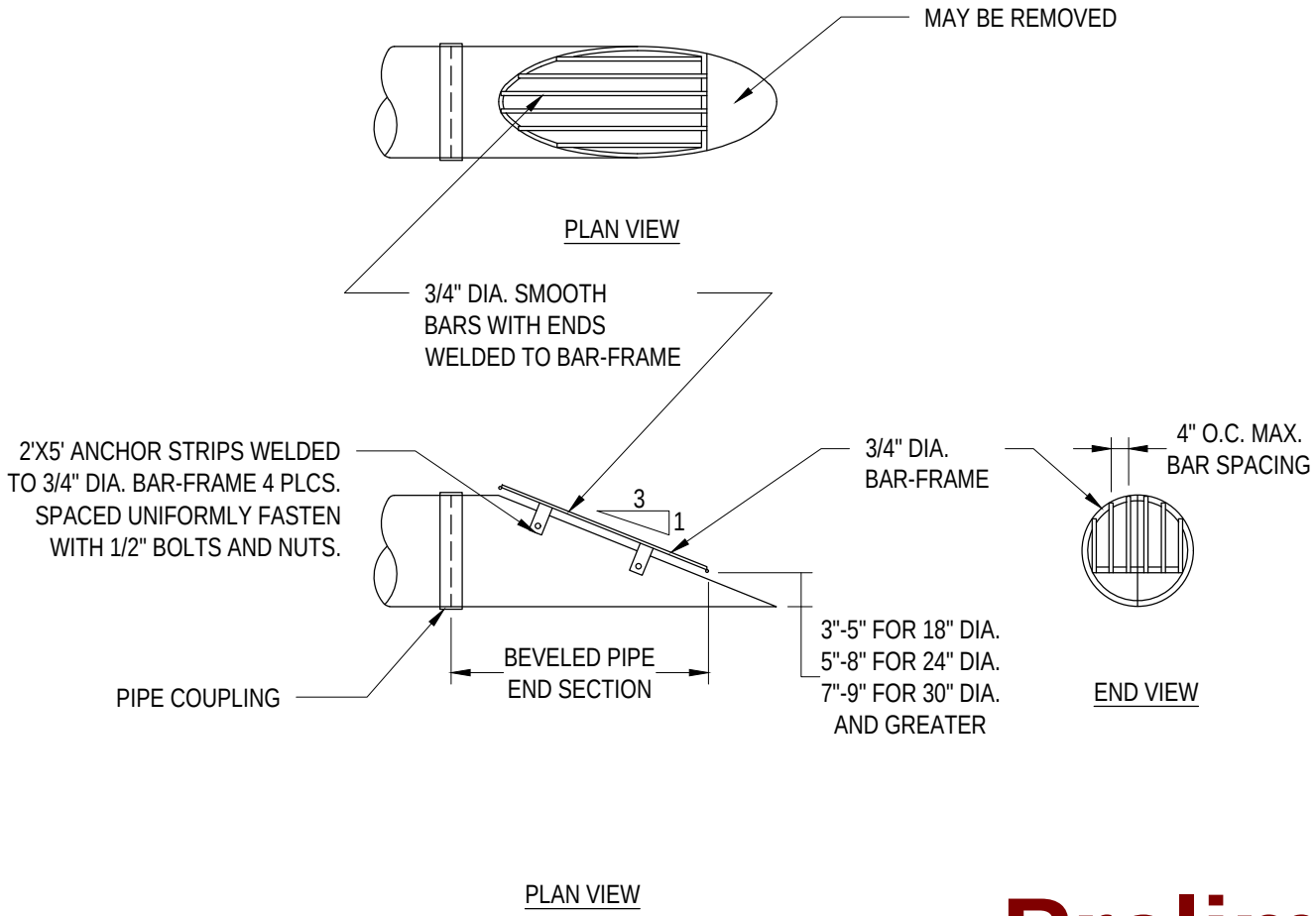

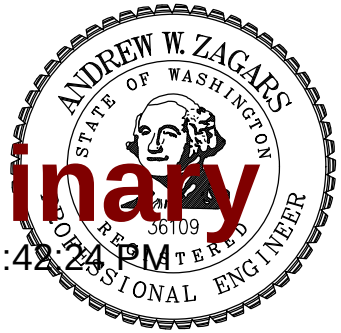

Preliminary

11/09/2016 1:42:24 PM

NOTES:

1. CMP END-SECTION SHOWN. FOR CONCRETE PIPE BEVELED END-SECTION, SEE STD DWG 7-01.
2. ALL PARTS MUST BE ALUMINUM OR STAINLESS STEEL.
3. TRASH RACKS REQUIRED ON ALL PIPES 18" TO 36" IN DIAMETER ENTERING A CLOSED SYSTEM.

CITY OF SAMMAMISH
DEPARTMENT OF PUBLIC WORKS

TRASH RACK
(DEBRIS CAGE) – PIPE END

APPROVED BY
CITY ENGINEER _____ DATE _____

REV	DWN	CKD	DATE	FILE
	XXX	XXX	AUG-XX-2015	FIG07-02

REV. NO. X

Exhibit 4

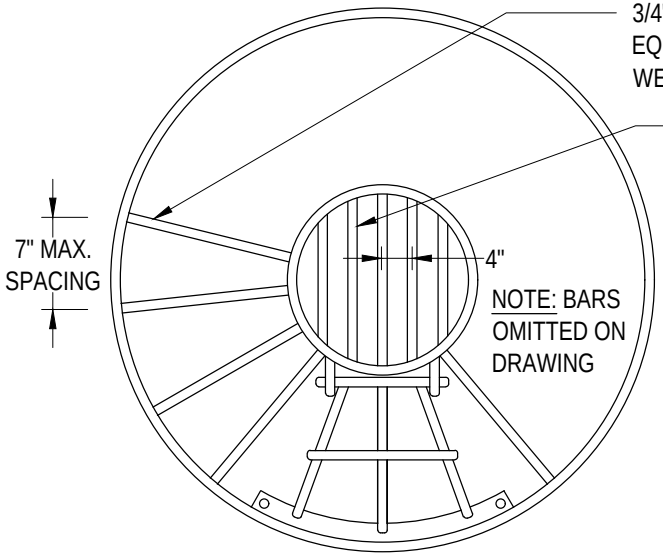

PLAN

NOTES:

1. ALL STEEL IN PLATES, BARS AND BANDS SHALL CONFORM TO THE REQUIREMENTS OF ASTM A38.
2. DEBRIS CAGE SHALL BE HOT-DIP GALVANIZED IN ACCORDANCE WITH ASTM A123 (AASHTO M111).

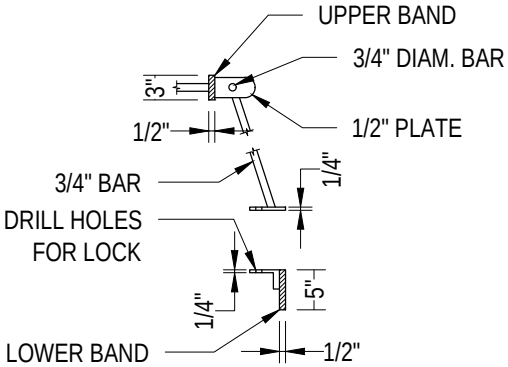

ENTRY GATE DETAIL

CB	INNER DIAM.
48"	58"
54"	65"
60"	72"
72"	86"
96"	114"

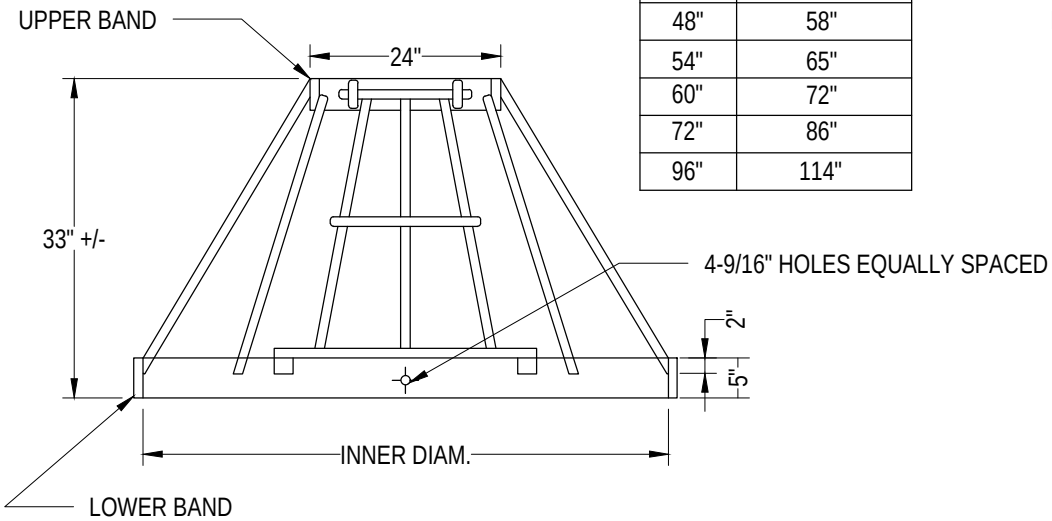

ELEVATION

Preliminary

11/09/2016 1:42:26 PM

CITY OF SAMMAMISH
DEPARTMENT OF PUBLIC WORKS

TRASH RACK
(DEBRIS CAGE) – CONICAL

APPROVED BY
CITY ENGINEER _____ DATE _____

REV	DWN	CKD	DATE	FILE
	XXX	XXX	AUG-XX-2015	FIG07-03

REV. NO. X

Exhibit 4

FRAME AND GRATE
SEE STD DWGS 7-16
& 7-18 FOR DETAILS

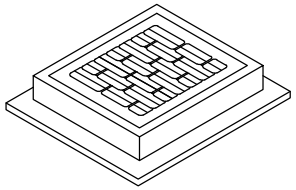

6" RISER SECTION

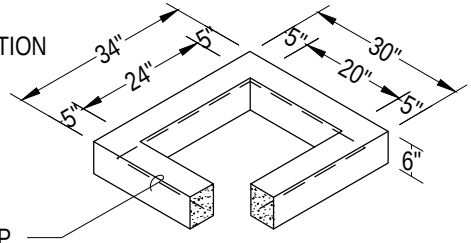

1 #3 BAR HOOP

12" RISER SECTION

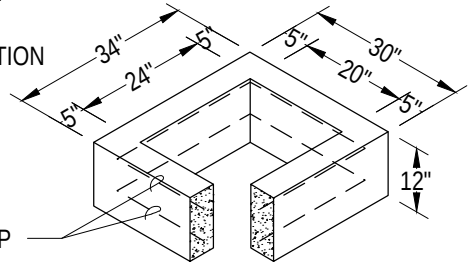

2 #3 BAR HOOP

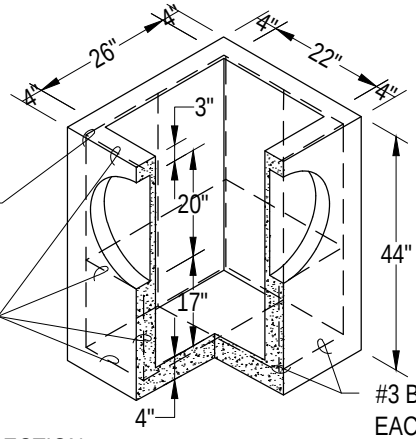

#3 BAR EACH CORNER

#3 BAR EACH SIDE

#3 BAR EACH WAY

PRECAST BASE SECTION
(MEASUREMENT AT THE
TOP OF THE BASE)

NOTES:

1. CATCH BASINS SHALL BE CONSTRUCTED IN ACCORDANCE WITH ASTM C478 (AASHTO M 199) & C890 UNLESS OTHERWISE SHOWN ON PLANS OR NOTED IN THE WSDOT/APWA STANDARD SPECIFICATIONS.
2. AS AN ACCEPTABLE ALTERNATIVE TO REBAR, WELDED WIRE FABRIC HAVING A MIN. AREA OF 0.12 SQUARE INCHES PER FOOT MAY BE USED. WELDED WIRE FABRIC SHALL COMPLY TO ASTM A497 (AASHTO M 221). WIRE FABRIC COMPLY TO ASTM A497 (AASHTO M 221). WIRE FABRIC SHALL NOT BE PLACED IN KNOCKOUTS.
3. ALL REINFORCED CAST-IN-PLACE CONCRETE SHALL BE CLASS 4000.
4. PRECAST BASES SHALL BE FURNISHED WITH CUTOUTS OR KNOCKOUTS. KNOCKOUTS SHALL HAVE A WALL THICKNESS OF 2" MIN. ALL PIPE SHALL BE INSTALLED IN FACTORY PROVIDED KNOCKOUTS. UNUSED KNOCKOUTS NEED NOT BE GROUTED IF WALL IS LEFT INTACT.
5. KNOCKOUT OR CUTOUT HOLE SIZE IS EQUAL TO PIPE OUTER DIAM. PLUS CATCH BASIN WALL THICKNESS.
6. ROUND KNOCKOUTS MAY BE ON ALL 4 SIDES, WITH MAX. DIAM. OF 20". KNOCKOUTS MAY BE EITHER ROUND OR "D" SHAPE.
7. THE MAX. DEPTH FROM THE FINISHED GRADE TO THE PIPE INVERT IS 5'-0".
8. THE TAPER ON THE SIDES OF THE PRECAST BASE SECTION AND RISER SECTION SHALL NOT EXCEED 1/2"/FT.
9. CATCH BASIN FRAME AND GRATE SHALL BE IN ACCORDANCE WITH WSDOT /APWA STANDARD SPECIFICATIONS AND MEET THE STRENGTH REQUIREMENTS OF FEDERAL SPECIFICATION A-A-60005. MATING SURFACES SHALL BE FINISHED TO ASSURE NON-ROCKING FIT WITH ANY COVER POSITION.
10. FRAME AND GRATE MAY BE INSTALLED WITH FLANGE DOWN OR CAST INTO RISER.
11. FOR CATCH BASINS IN PARKING LOTS REFER TO WSDOT STANDARD PLAN B-5.60-01.
12. EDGE OF RISER OR BRICK SHALL NOT BE MORE THAN 2" FROM VERTICAL EDGE OF CATCH BASIN WALL.

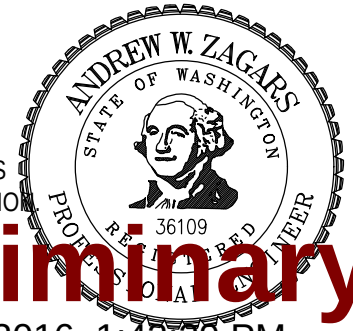

Preliminary

11/09/2016 1:42:29 PM

CITY OF SAMMAMISH
DEPARTMENT OF PUBLIC WORKS

CATCH BASIN TYPE 1

APPROVED BY
CITY ENGINEER _____ DATE _____

REV	DWN	CKD	DATE	FILE
	XXX	XXX	AUG-XX-2015	FIG07-04

REV. NO. X

Exhibit 4

FRAME AND GRATE
SEE STD DWGS 7-16
& 7-18 FOR DETAILS

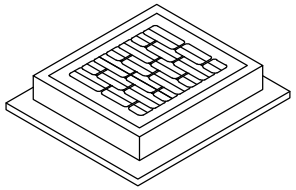

RISER SECTION

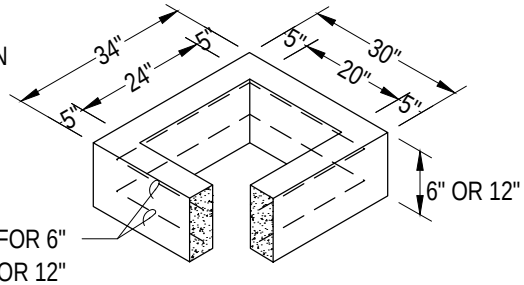

6" REDUCING SECTION

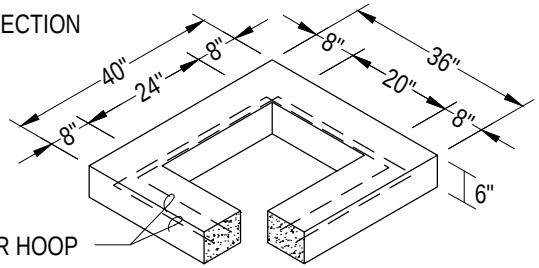

PRECAST BASE SECTION

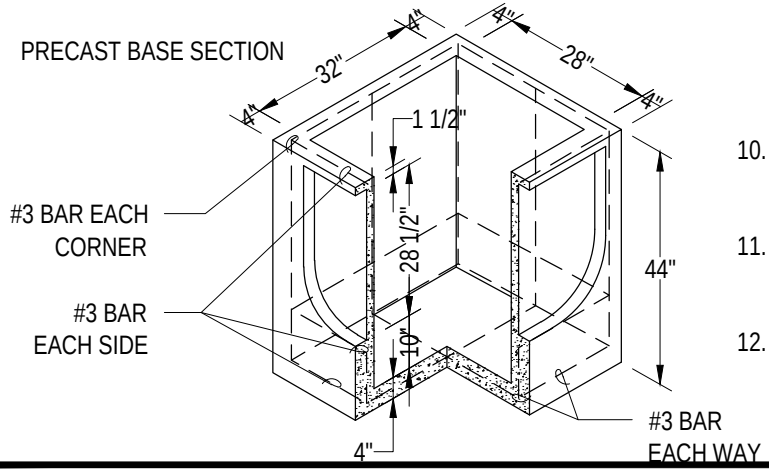

NOTES:

1. CATCH BASINS SHALL BE CONSTRUCTED IN ACCORDANCE WITH ASTM C478 (AASHTO M 199) & C890 UNLESS OTHERWISE SHOWN ON PLANS OR NOTED IN THE WSDOT/APWA STANDARD SPECIFICATIONS.
2. AS AN ACCEPTABLE ALTERNATIVE TO REBAR, WELDED WIRE FABRIC HAVING A MIN. AREA OF 0.12 SQUARE INCHES PER FOOT MAY BE USED. WELDED WIRE FABRIC SHALL COMPLY TO ASTM A497 (AASHTO M 221). WIRE FABRIC COMPLY TO ASTM A497 (AASHTO M 221). WIRE FABRIC SHALL NOT BE PLACED IN KNOCKOUTS.
3. ALL REINFORCED CAST-IN-PLACE CONCRETE SHALL BE CLASS 4000.
4. PRECAST BASES SHALL BE FURNISHED WITH CUTOUTS OR KNOCKOUTS. KNOCKOUTS SHALL HAVE A WALL THICKNESS OF 2" MIN. ALL PIPE SHALL BE INSTALLED IN FACTORY PROVIDED KNOCKOUTS. UNUSED KNOCKOUTS NEED NOT BE GROUTED IF WALL IS LEFT INTACT.
5. KNOCKOUT OR CUTOUT HOLE SIZE IS EQUAL TO PIPE OUTER DIAM. PLUS CATCH BASIN WALL THICKNESS.
6. ROUND KNOCKOUTS MAY BE ON ALL 4 SIDES, WITH MAX. DIAM. OF 26". KNOCKOUTS MAY BE EITHER ROUND OR "D" SHAPE.
7. THE MAX. DEPTH FROM THE FINISHED GRADE TO THE PIPE INVERT IS 5'-0".
8. THE TAPER ON THE SIDES OF THE PRECAST BASE SECTION AND RISER SECTION SHALL NOT EXCEED 1/2"/FT.
9. CATCH BASIN FRAME AND GRATE SHALL BE IN ACCORDANCE WITH WSDOT/APWA STANDARD SPECIFICATIONS AND MEET THE STRENGTH REQUIREMENTS OF FEDERAL SPECIFICATION A-A-60005. MATING SURFACES SHALL BE FINISHED TO ASSURE NON-ROCKING FIT WITH ANY COVER POSITION.
10. FRAME AND GRATE MAY BE INSTALLED WITH FLANGE DOWN OR CAST INTO RISER.
11. FOR CATCH BASINS IN PARKING LOTS REFER TO WSDOT STANDARD PLAN B-5.60-01.
12. EDGE OF RISER OR BRICK SHALL NOT BE MORE THAN 2" FROM VERTICAL EDGE OF CATCH BASIN WALL.

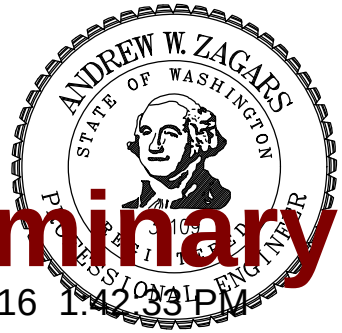

Preliminary

11/09/2016 1:42:33 PM

CITY OF SAMMAMISH
DEPARTMENT OF PUBLIC WORKS

CATCH BASIN TYPE 1-L

APPROVED BY
CITY ENGINEER _____ DATE _____

REV	DWN	CKD	DATE	FILE
	XXX	XXX	AUG-XX-2015	FIG07-05

REV. NO. X

Exhibit 4

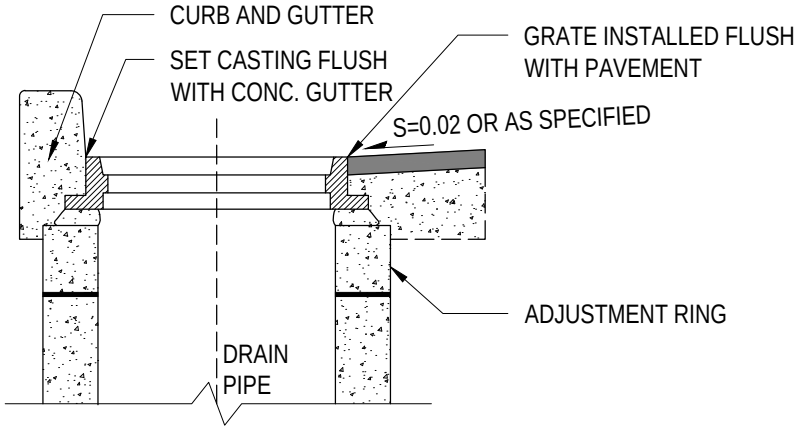

SECTION A-A

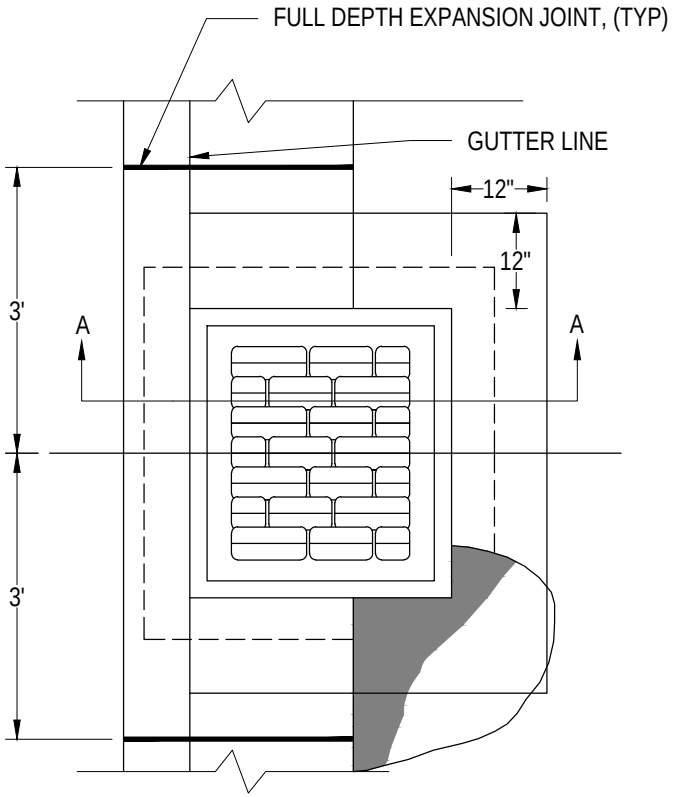

PLAN VIEW

NOTES:

1. AN APPROVED MATERIAL WHICH WILL PREVENT BONDING OF THE CURB TO FRAME, GRATE OR C.B. SHALL BE USED.

2. GROUT ALL JOINTS INSIDE AND OUTSIDE.

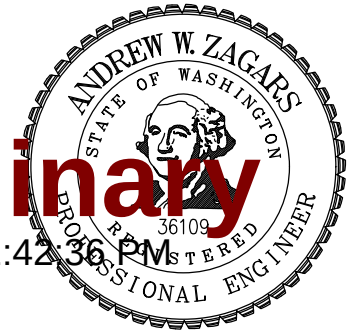

Preliminary

11/09/2016 1:42:36 PM

CITY OF SAMMAMISH DEPARTMENT OF PUBLIC WORKS			
CATCH BASIN INSTALLATION			
APPROVED BY CITY ENGINEER _____ DATE _____			
REV	DWN XXX	CKD XXX	DATE AUG-XX-2015	FILE FIG07-06

REV. NO. X

Exhibit 4

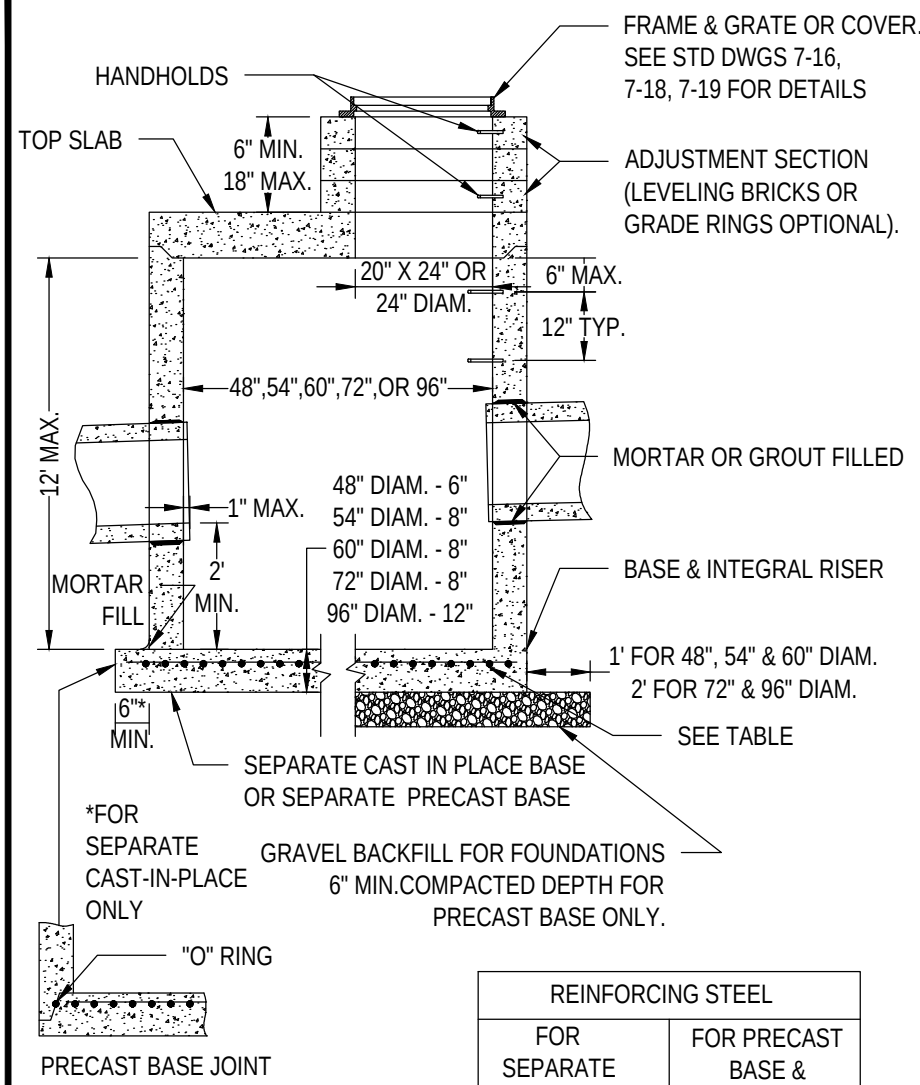

REINFORCING STEEL			
FOR SEPARATE BASES		FOR PRECAST BASE & INTEGRAL RISER	
DIAM.	SQ. IN./FT.	DIAM.	SQ. IN./FT.
48"	0.23	48"	0.15
54"	0.19	54"	0.19
60"	0.25	60"	0.25
72"	0.35	72"	0.24
96"	0.39	96"	0.29

NOTES:

1. CATCH BASINS SHALL BE CONSTRUCTED IN ACCORDANCE WITH ASTMC478 (AASHTO M199) AND ASTM C890 UNLESS OTHERWISE SHOWN ON PLANS OR NOTED IN THE WSDOT/APWA STANDARD SPECIFICATIONS.
2. HANDHOLDS IN ADJUSTMENT SECTION SHALL HAVE 3" MIN. CLEARANCE. STEPS IN CATCH BASIN SHALL HAVE 6" MIN. CLEARANCE. SEE STD DWG 7-08, CATCH BASIN DETAILS. HANDHOLDS SHALL BE PLACED IN ALTERNATING GRADE RINGS OR LEVELING BRICK COURSE WITH A MIN. OF ONE HANDHOLD BETWEEN THE LAST STEP AND TOP OF THE MANHOLE.
3. ALL REINFORCED CAST-IN-PLACE CONCRETE SHALL BE CLASS 4000. ALL PRECAST CONCRETE SHALL BE CLASS 4000.
4. PRECAST BASES SHALL BE FURNISHED WITH CUTOUTS OR KNOCKOUTS. KNOCKOUTS SHALL HAVE WALL THICKNESS OF 2" MIN. UNUSED KNOCKOUTS NEED NOT BE GROUTED IF WALL IS LEFT INTACT. PIPES SHALL BE INSTALLED ONLY IN FACTORY KNOCKOUTS UNLESS OTHERWISE APPROVED BY THE ENGINEER.
5. KNOCKOUT OR CUTOUT HOLE SIZE SHALL EQUAL PIPE OUTER DIAM. PLUS CATCH BASIN WALL THICKNESS. MAX. HOLE SIZE SHALL BE 36" FOR 48" CATCH BASIN, 42" FOR 54" C.B., 48" FOR 60" C.B., 60" FOR 72" C.B., 84" FOR 96" C.B. MIN. DISTANCE BETWEEN HOLES SHALL BE 8" FOR 48", 54", AND 60" C.B.; 12" FOR 72" AND 96" C.B.
6. CATCH BASIN FRAMES AND GRATES OR COVERS SHALL BE IN ACCORDANCE WITH STD DWGS 7-16, 7-18, & 7-19 AND MEET THE STRENGTH REQUIREMENTS OF FEDERAL SPECIFICATION A-A-60005. MATING SURFACES SHALL BE FINISHED TO ASSURE NON-ROCKING FIT WITH ANY COVER POSITION.
7. ALL BASE REINFORCING STEEL SHALL HAVE A MIN. YIELD STRENGTH OF 60,000 PSI AND BE PLACED IN THE UPPER HALF OF THE BASE WITH 1" MIN. CLEARANCE.
8. MIN. SOIL BEARING VALUE SHALL EQUAL 3,300 POUNDS PER SQUARE FOOT.
9. FOR DETAILS SHOWING LADDER, STEPS, HANDRAILS AND TOP SLABS, SEE STD DWG 7-08.
10. SEE THE WSDOT STANDARD SPECIFICATIONS SEC. 7-05.3 FOR JOINT REQUIREMENTS.
11. IF PIPE IS SMOOTH WALL PLASTIC, NOT CONCRETE, A SAND COLLAR IS REQUIRED.

ANDREW W. ZAGARS
STATE OF WASHINGTON
36109
REGISTERED
PROFESSIONAL ENGINEER

Preliminary

11/09/2016 1:42:39 PM

CITY OF SAMMAMISH
DEPARTMENT OF PUBLIC WORKS

CATCH BASIN TYPE 2 –
48", 54", 60", 72" & 96"

APPROVED BY
CITY ENGINEER _____ DATE _____

REV	DWN	CKD	DATE	FILE
	XXX	XXX	AUG-XX-2015	FIG07-07

REV. NO. X

Exhibit 4

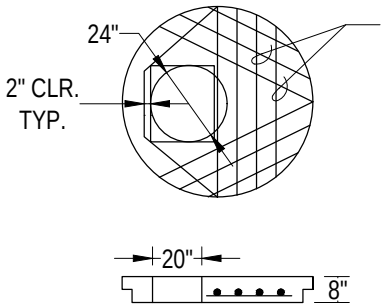

48", 54" & 60" TOP SLAB

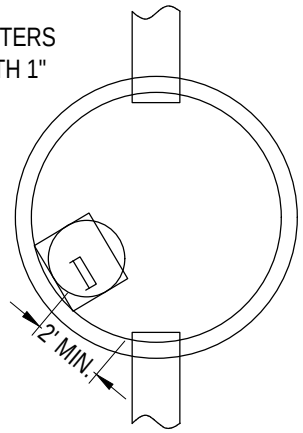

TYPICAL ORIENTATION FOR ACCESS AND STEPS

NOTES:

1. PROPRIETARY CATCH BASIN HANDHOLDS AND STEPS ARE ACCEPTABLE, PROVIDED THAT THEY CONFORM TO SEC. R, ASTM C478, AASHTO M-199 AND MEET ALL WISHA REQUIREMENTS.
2. CATCH BASIN STEP/HANDHOLD LEGS SHALL BE PARALLEL OR APPROXIMATELY RADIAL AT THE OPTION OF THE MANUFACTURER, EXCEPT THAT ALL STEPS IN ANY CATCH BASIN SHALL BE SIMILAR. PENETRATION OF OUTER WALL BY A LEG IS PROHIBITED.
3. HANDHOLDS AND STEPS SHALL HAVE "DROP" RUNGS AS SHOWN ON DETAIL OR PROTUBERANCES TO PREVENT SIDEWAYS SLIP.
4. SLAB OPENING MAY BE 24" X 20" OR 24" DIAM.
5. AS AN ACCEPTABLE ALTERNATIVE TO REBAR, WELDED WIRE FABRIC HAVING A MIN. AREA OF 0.12 SQUARE INCHES PER FOOT MAY BE USED. WELDED WIRE FABRIC SHALL COMPLY TO ASTM A497.
6. LADDERS OR STEPS SHALL EXTEND TO WITHIN 16" OF BOTTOM OF CATCH BASIN.
7. HANGING LADDERS SHALL BE PERMANENTLY FASTENED AT TOP BY HANGING ON STEP OR BY BOLTING OR EMBEDDING IN CONCRETE. EACH SHALL BE EMBEDDED AT BOTTOM IN BASE.
8. ADDITIONAL SAFETY FEATURES MAY BE REQUIRED.

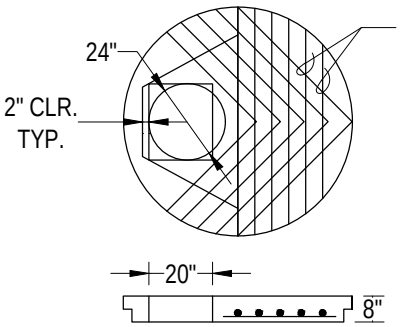

72" TOP SLAB

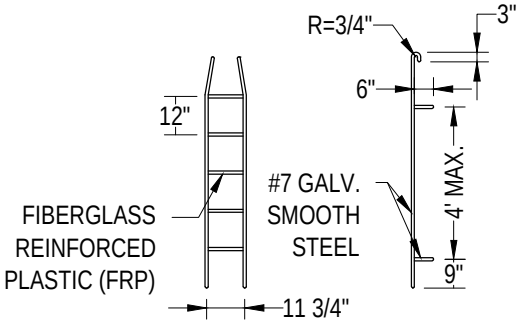

PREFABRICATED LADDER

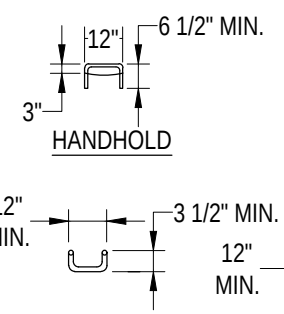

HANDHOLD

ELEVATION

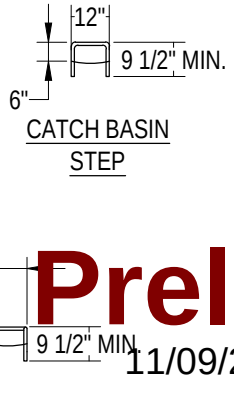

CATCH BASIN STEP

PLAN

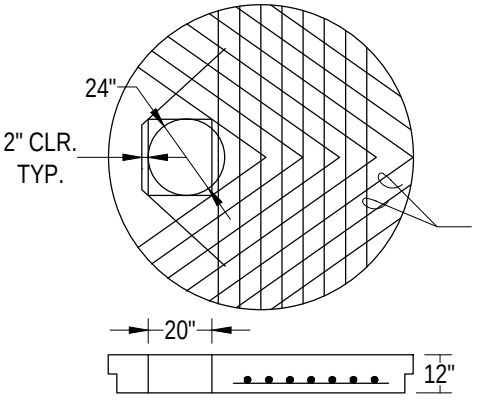

96" TOP SLAB

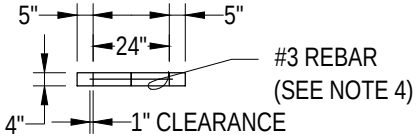

GRADE RING

Preliminary
11/09/2016 1:42:42 PM

CITY OF SAMMAMISH
DEPARTMENT OF PUBLIC WORKS

CATCH BASIN – TYPE 2 DETAILS

APPROVED BY
CITY ENGINEER _____ DATE _____

REV	DWN	CKD	DATE	FILE
	XXX	XXX	AUG-XX-2015	FIG07-08

REV. NO. X

Exhibit 4

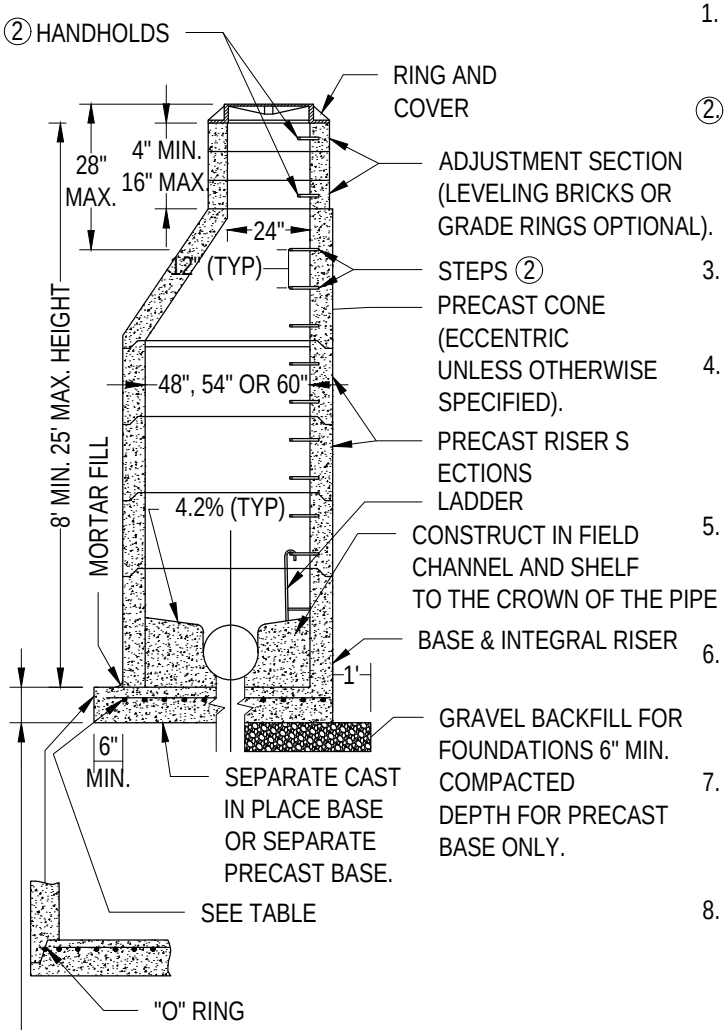

REINFORCING STEEL			
FOR SEPARATE BASES		FOR PRECAST BASE & INTEGRAL RISER	
DIAM.	SQ. IN./FT.	DIAM.	SQ. IN./FT.
48"	0.23	48"	0.15
54"	0.19	54"	0.19
60"	0.25	60"	0.25

NOTES:

1. MANHOLES SHALL BE CONSTRUCTED IN ACCORDANCE WITH AASHTO M199 UNLESS OTHERWISE SHOWN ON PLANS OR NOTED IN THE WSDOT/APWA STANDARD SPECIFICATIONS.

② HANDHOLDS IN ADJUSTMENT SECTION SHALL HAVE 3" MIN. CLEARANCE. STEPS IN MANHOLE SHALL HAVE 6" MIN. CLEARANCE. SEE STD DWG 7-12, "MANHOLE DETAILS." HANDHOLDS SHALL BE PLACED IN ALTERNATING GRADE RINGS OR LEVELING BRICK COURSE WITH A MIN. OF ONE HAND HOLD BETWEEN THE LAST STEP AND THE TOP OF THE MANHOLE.

3. ALL REINFORCED CAST-IN-PLACE CONCRETE SHALL BE CLASS 4000. ALL PRECAST CONCRETE SHALL BE CLASS 4000. NON-REINFORCED CONCRETE IN CHANNEL AND SHELF SHALL BE CLASS 3000.

4. PRECAST BASES SHALL BE FURNISHED WITH CUTOUTS OR KNOCKOUTS. KNOCKOUTS SHALL HAVE WALL THICKNESS OF 2" MIN. UNUSED KNOCKOUTS NEED NOT BE GROUTED IF WALL IS LEFT INTACT. PIPES SHALL BE INSTALLED ONLY IN FACTORY KNOCKOUTS UNLESS OTHERWISE APPROVED BY THE ENGINEER.

5. KNOCKOUT OR CUTOUT HOLE SIZE SHALL EQUAL PIPE OUTER DIAM. PLUS MANHOLE WALL THICKNESS. MAX. HOLE SIZE SHALL BE 36" FOR 48" MANHOLE, 42" FOR 54" MANHOLE, 48" FOR 60" M.H. MIN. DISTANCE BETWEEN HOLES SHALL BE 8".

6. MANHOLE RINGS AND COVERS SHALL MEET THE STRENGTH REQUIREMENTS OF FEDERAL SPECIFICATION A-A-60005. MATING SURFACES SHALL BE FINISHED TO ASSURE NON-ROCKING FIT WITH ANY COVER POSITION.

7. ALL BASE REINFORCING STEEL SHALL HAVE A MIN. YIELD STRENGTH OF 60,000 PSI AND BE PLACED IN THE UPPER HALF OF THE BASE WITH 1" MIN. CLEARANCE.

8. FOR HEIGHTS OF 12' OR LESS, MIN. SOIL BEARING VALUE SHALL EQUAL 3,300 POUNDS PER SQUARE FOOT. FOR HEIGHTS OVER 12', MIN. SOIL BEARING VALUE SHALL EQUAL 3,800 POUNDS PER SQUARE FOOT.

9. FOR DETAILS SHOWING GRADE RING, LADDER, STEPS, HANDHOLDS, AND TOP SLABS, SEE STD DWG 7-12, "MANHOLE DETAILS".

10. SEE THE WSDOT STANDARD SPECIFICATIONS SEC. 7-05.3 FOR JOINT REQUIREMENTS.

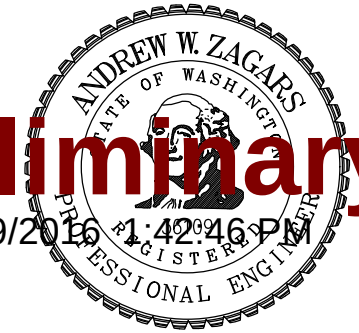

Preliminary
11/09/2016 1:42:46 PM

CITY OF SAMMAMISH
DEPARTMENT OF PUBLIC WORKS

MANHOLE TYPE 1–
48", 54" & 60"

APPROVED BY
CITY ENGINEER _____ DATE _____

REV	DWN	CKD	DATE	FILE
	XXX	XXX	AUG-XX-2015	FIG07-09

REV. NO. X

Exhibit 4

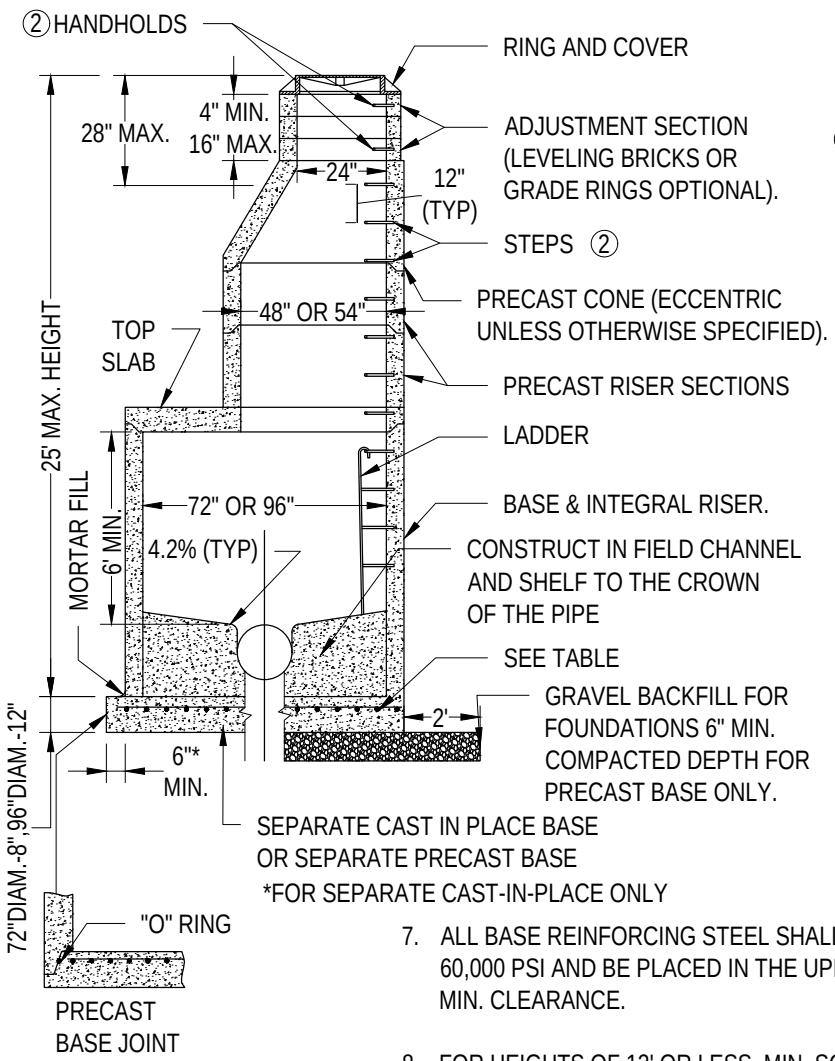

NOTES:

1. MANHOLES SHALL BE CONSTRUCTED IN ACCORDANCE WITH AASHTO M199 UNLESS OTHERWISE SHOWN ON PLANS OR NOTED IN THE WSDOT/APWA STANDARD SPECIFICATIONS.

② HANDHOLDS IN ADJUSTMENT SECTION SHALL HAVE 3" MIN. CLEARANCE. STEPS IN MANHOLE SHALL HAVE 6" MIN. CLEARANCE. SEE STD DWG 7-12, "MANHOLE DETAILS." HANDHOLDS SHALL BE PLACED IN ALTERNATING GRADE RINGS OR LEVELING BRICK COURSE WITH A MIN. OF ONE HAND HOLD BETWEEN THE LAST STEP AND THE TOP OF THE MANHOLE.

3. ALL REINFORCED CAST-IN-PLACE CONCRETE SHALL BE CLASS 4000. ALL PRECAST CONCRETE SHALL BE CLASS 4000. NON-REINFORCED CONCRETE IN CHANNEL AND SHELF SHALL BE CLASS 3000.

4. PRECAST BASES SHALL BE FURNISHED WITH CUTOUTS OR KNOCKOUTS. KNOCKOUTS SHALL HAVE WALL THICKNESS OF 2" MIN. UNUSED KNOCKOUTS NEED NOT BE GROUTED IF WALL IS LEFT INTACT. PIPES SHALL BE INSTALLED ONLY IN FACTORY KNOCKOUTS UNLESS OTHERWISE APPROVED BY THE ENGINEER.

5. KNOCKOUT OR CUTOUT HOLE SIZE SHALL EQUAL PIPE OUTER DIAM. PLUS MANHOLE WALL THICKNESS. MAX. HOLE SIZE SHALL BE 60" FOR 72" MANHOLE, 84" FOR 96" MANHOLE. MIN. DISTANCE BETWEEN HOLES SHALL BE 12".

6. MANHOLE RINGS AND COVERS SHALL MEET THE STRENGTH REQUIREMENTS OF FEDERAL SPECIFICATION A-A-60005. MATING SURFACES SHALL BE FINISHED TO ASSURE NON-ROCKING FIT WITH ANY COVER POSITION.

7. ALL BASE REINFORCING STEEL SHALL HAVE A MIN. YIELD STRENGTH OF 60,000 PSI AND BE PLACED IN THE UPPER HALF OF THE BASE WITH 1" MIN. CLEARANCE.

8. FOR HEIGHTS OF 12' OR LESS, MIN. SOIL BEARING VALUE SHALL EQUAL 3,300 POUNDS PER SQUARE FOOT. FOR HEIGHTS OVER 12', MIN. SOIL BEARING VALUE SHALL EQUAL 3,800 POUNDS PER SQUARE FOOT.

9. FOR DETAILS SHOWING GRADE RING, LADDER, STEPS, HANDHOLDS, AND TOP SLABS, SEE STD DWG 7-12, "MANHOLE DETAILS".

10. SEE THE WSDOT STANDARD SPECIFICATIONS SEC. 7-05.3 FOR JOINT REQUIREMENTS.

REINFORCING STEEL			
FOR SEPARATE BASES		FOR PRECAST BASE & INTEGRAL RISER	
DIAM.	SQ. IN./FT.	DIAM.	SQ. IN./FT.
72"	0.35	72"	0.24
96"	0.39	96"	0.29

ANDREW W. ZAGARS
STATE OF WASHINGTON
36109
REGISTERED PROFESSIONAL ENGINEER

Preliminary
11/09/2016 1:42:49 PM

CITY OF SAMMAMISH
DEPARTMENT OF PUBLIC WORKS

MANHOLE TYPE 2 – 72" & 96"

APPROVED BY
CITY ENGINEER _____ DATE _____

REV	DWN	CKD	DATE	FILE
	XXX	XXX	AUG-XX-2015	FIG07-10

REV. NO. X

Exhibit 4

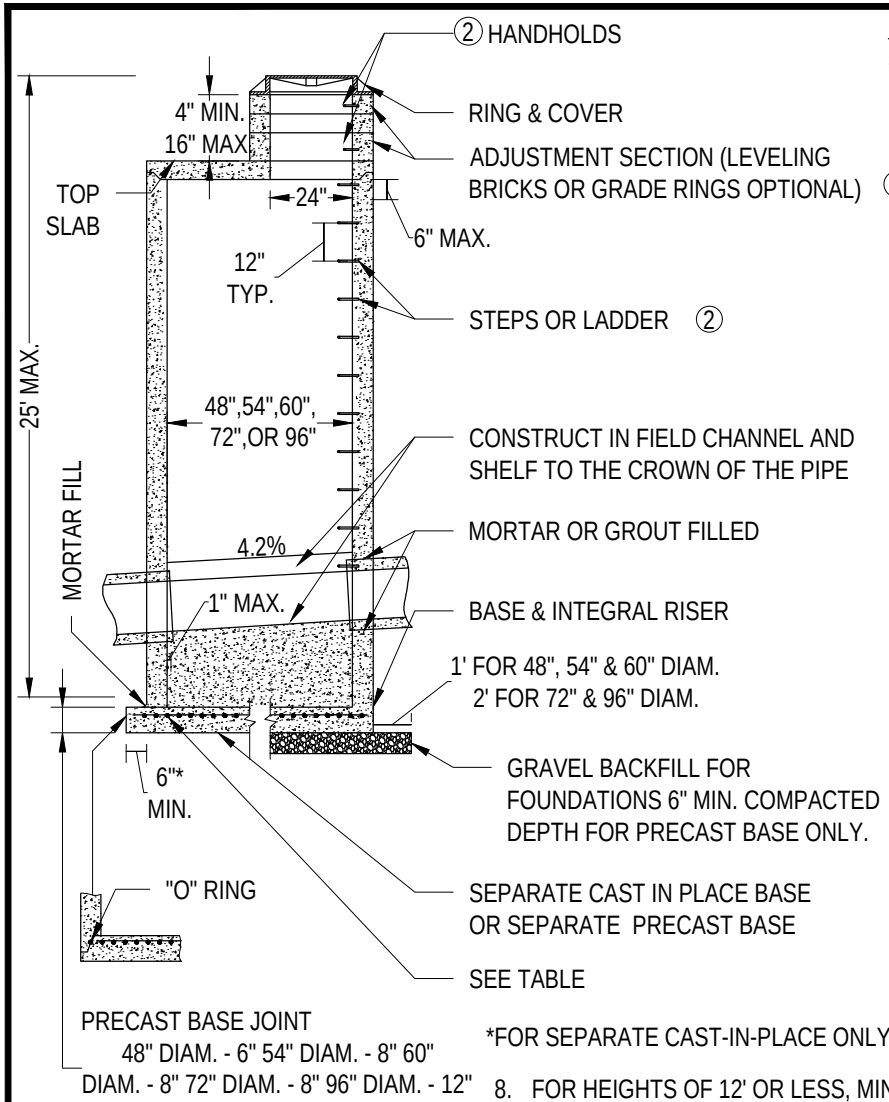

*FOR SEPARATE CAST-IN-PLACE ONLY

REINFORCING STEEL			
FOR SEPARATE BASES		FOR PRECAST BASE & INTEGRAL RISER	
DIAM.	SQ. IN./FT.	DIAM.	SQ. IN./FT.
48"	0.23	48"	0.15
54"	0.19	54"	0.19
60"	0.25	60"	0.25
72"	0.35	72"	0.24
96"	0.39	96"	0.29

NOTES:

1. MANHOLES SHALL BE CONSTRUCTED IN ACCORDANCE WITH AASHTO M199 UNLESS OTHERWISE SHOWN ON PLANS OR NOTED IN THE WSDOT/APWA STANDARD SPECIFICATIONS.

② HANDHOLDS IN ADJUSTMENT SECTION SHALL HAVE 3" MIN. CLEARANCE. STEPS IN MANHOLE SHALL HAVE 6" MIN. CLEARANCE. SEE STD DWG 7-12, "MANHOLE DETAILS." HANDHOLDS SHALL BE PLACED IN ALTERNATING GRADE RINGS OR LEVELING BRICK COURSE WITH A MIN. OF ONE HAND HOLD BETWEEN THE LAST STEP AND THE TOP OF THE MANHOLE.

3. ALL REINFORCED CAST-IN-PLACE CONCRETE SHALL BE CLASS 4000. ALL PRECAST CONCRETE SHALL BE CLASS 4000. NON-REINFORCED CONCRETE IN CHANNEL AND SHELF SHALL BE CLASS 3000.

4. PRECAST BASES SHALL BE FURNISHED WITH CUTOUTS OR KNOCKOUTS. KNOCKOUTS SHALL HAVE WALL THICKNESS OF 2" MIN. UNUSED KNOCKOUTS NEED NOT BE GROUTED IF WALL IS LEFT INTACT. PIPES SHALL BE INSTALLED ONLY IN FACTORY KNOCKOUTS UNLESS OTHERWISE APPROVED BY THE ENGINEER.

5. KNOCKOUT OR CUTOUT HOLE SIZE SHALL EQUAL PIPE OUTER DIAM. PLUS MANHOLE WALL THICKNESS. MAX. HOLE SIZE SHALL BE 36" FOR 48" M.H., 42" FOR 54" M.H., 48" FOR 60" M.H., 60" FOR 72" M.H., 84" FOR 96" M.H. MIN. DISTANCE BETWEEN HOLES SHALL BE 8" FOR 48", 54", AND 60" M.H., 12" FOR 72" AND 96" M.H.

6. MANHOLE RINGS AND COVERS SHALL MEET THE STRENGTH REQUIREMENTS OF FEDERAL SPECIFICATION A-A-60005. MATING SURFACES SHALL BE FINISHED TO ASSURE NON-ROCKING FIT WITH ANY COVER POSITION.

7. ALL BASE REINFORCING STEEL SHALL HAVE A MIN. YIELD STRENGTH OF 60,000 PSI AND BE PLACED IN THE UPPER HALF OF THE BASE WITH 1" MIN. CLEARANCE.

8. FOR HEIGHTS OF 12' OR LESS, MIN. SOIL BEARING VALUE SHALL EQUAL 3,300 POUNDS PER SQUARE FOOT. FOR HEIGHTS OVER 12', MIN. SOIL BEARING VALUE SHALL EQUAL 3,800 POUNDS PER SQUARE FOOT.

9. FOR DETAILS SHOWING GRADE RING, LADDER, STEPS, HANDHOLDS, AND TOP SLABS, SEE STD DWG 7-12, "MANHOLE DETAILS".

10. SEE THE WSDOT STANDARD SPECIFICATIONS SEC. 7-05.3 FOR JOINT REQUIREMENTS.

ANDREW W. ZAGARS
STATE OF WASHINGTON
36109
REGISTERED PROFESSIONAL ENGINEER

Preliminary

11/09/2016 1:42:52 PM

CITY OF SAMMAMISH
DEPARTMENT OF PUBLIC WORKS

MANHOLE TYPE 3 –
48", 54", 60", 72" & 96"

APPROVED BY
CITY ENGINEER _____ DATE _____

REV	DWN	CKD	DATE	FILE
	XXX	XXX	AUG-XX-2015	FIG07-11

REV. NO. X

Exhibit 4

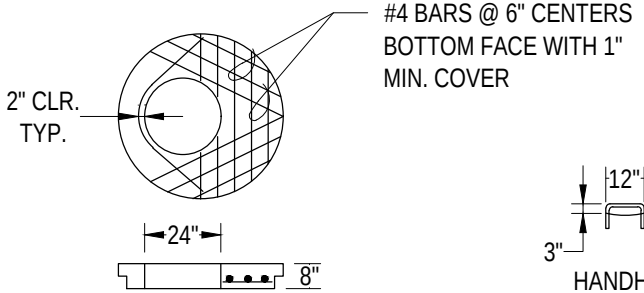

48", 54", & 60" TOP SLAB

*ALL STEPS & RUNGS 1" DIAM. GALV. REBAR OR COPOLYMER PROPYLENE.

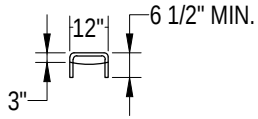

HANDHOLD

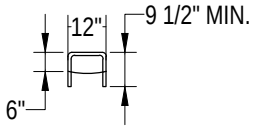

MANHOLE STEP

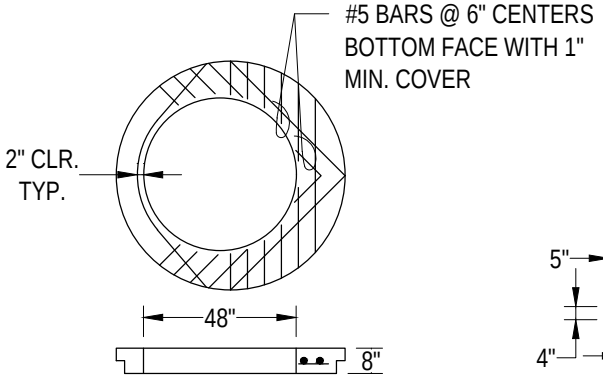

72" TOP SLAB

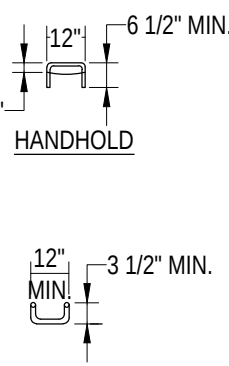

ELEVATION

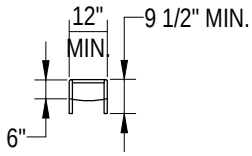

PLAN

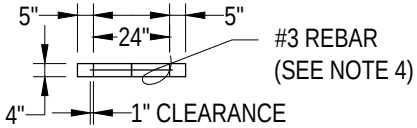

GRADE RING

NOTES:

1. PROPRIETARY MANHOLE HANDHOLDS AND STEPS ARE ACCEPTABLE, PROVIDED THAT THEY CONFORM TO SEC. R, ASTM C478, AASHTO M199 AND MEET ALL WISHA REQUIREMENTS.
2. MANHOLE STEP/HANDHOLD LEGS SHALL BE PARALLEL OR APPROXIMATELY RADIAL AT THE OPTION OF THE MANUFACTURER, EXCEPT THAT ALL STEPS IN ANY MANHOLE SHALL BE SIMILAR. PENETRATION OF OUTER WALL BY A LEG IS PROHIBITED.
3. HANDHOLDS AND STOPS SHALL HAVE "DROP" RUNGS OR PROTUBERANCES TO PREVENT SIDEWAYS SLIP.
4. LADDERS OR STEPS SHALL EXTEND TO WITHIN 16" OF BOTTOM OF MANHOLE.
5. HANGING LADDERS SHALL BE PERMANENTLY FASTENED AT TOP BY HANGING ON STEP OR BY BOLTING OR EMBEDDING IN CONCRETE. EACH SHALL BE EMBEDDED AT BOTTOM IN BASE.
6. ADDITIONAL SAFETY FEATURES MAY BE REQUIRED.

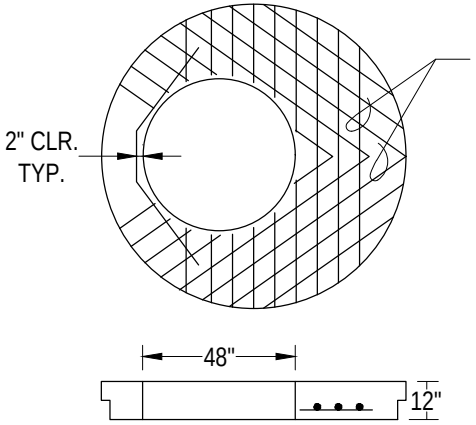

96" TOP SLAB

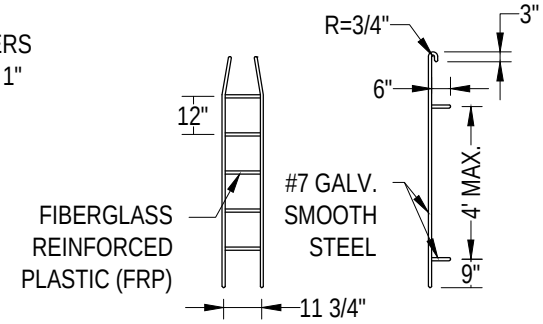

PREFABRICATED LADDER

Preliminary

11/09/2016 1:42:56 PM

CITY OF SAMMAMISH
DEPARTMENT OF PUBLIC WORKS

MANHOLE DETAILS

APPROVED BY
CITY ENGINEER _____ DATE _____

REV	DWN	CKD	DATE	FILE
	XXX	XXX	AUG-XX-2015	FIG07-12

REV. NO. X

Exhibit 4

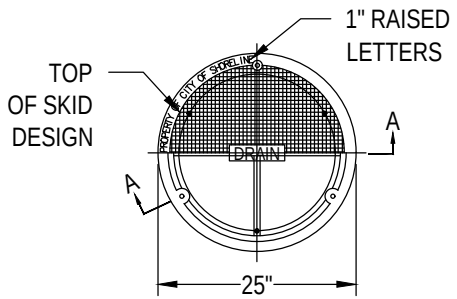

PLAN

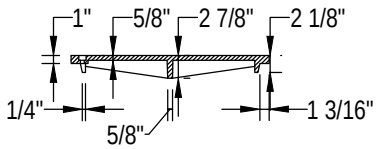

SECTION A-A

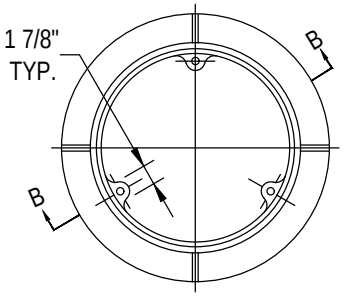

PLAN

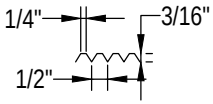

COVER SKID DESIGN DETAIL

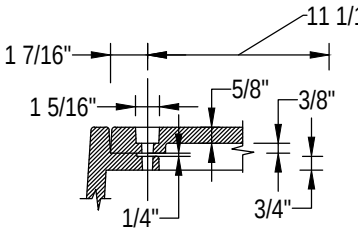

BOLT-DOWN DETAIL

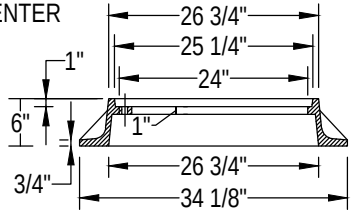

SECTION B-B

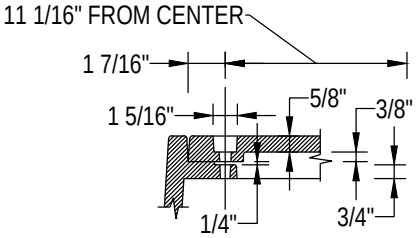

BOLT-DOWN DETAIL

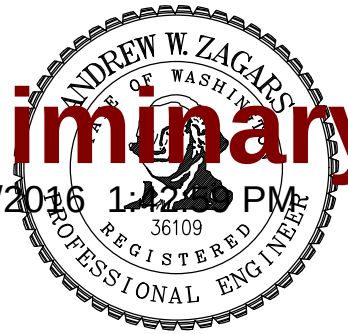

Preliminary

11/09/2016 1:42:59 PM

NOTES:

1. USE WITH THREE LOCKING BOLTS 5/8"-11 NC STAINLESS TYPE 304 STEEL SOCKET HEAD (ALLEN HEAD) CAP SCREWS 2" LONG. DRILL HOLES SPACED 120° AT 11 1/16" RADIUS.
2. MATERIAL SHALL BE DUCTILE IRON ASTM A536 GRADE 80-55-06 OR CAST IRON ASTM A48 CLASS 30.
3. A 2-FOOT ASPHALT PAVEMENT SURFACE SHALL BE PLACED AROUND THE OUTSIDE PERIMETER OF THE FRAME AND LID IN LOCATIONS IN UNPAVED AREAS.

CITY OF SAMMAMISH
DEPARTMENT OF PUBLIC WORKS

LOCKING MANHOLE COVER AND INSTALLATION

APPROVED BY
CITY ENGINEER _____ DATE _____

REV	DWN	CKD	DATE	FILE
	XXX	XXX	AUG-XX-2015	FIG07-13

REV. NO. X

Exhibit 4

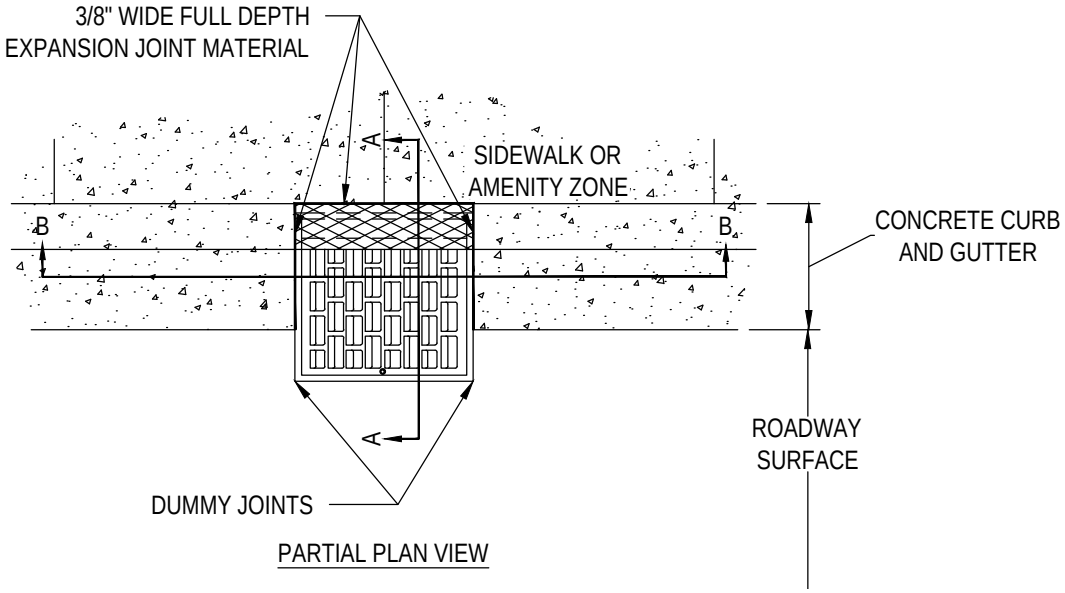

PARTIAL PLAN VIEW

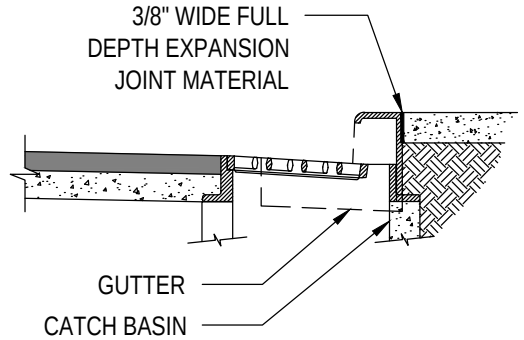

INLET WITH SIDEWALK

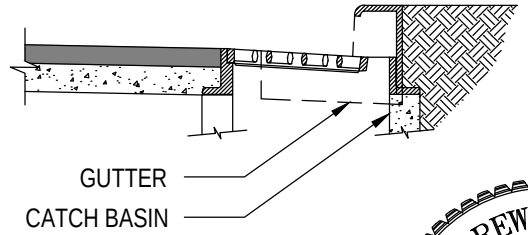

INLET WITH AMENITY ZONE

SECTION A-A

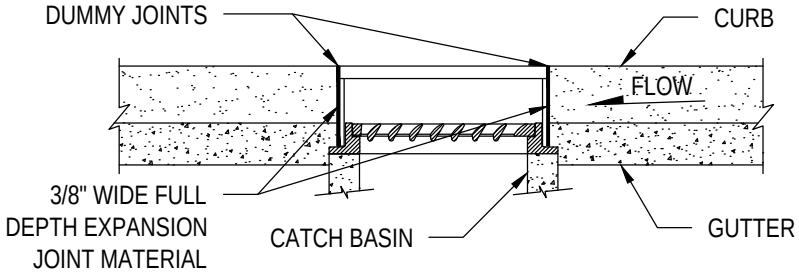

SECTION B-B

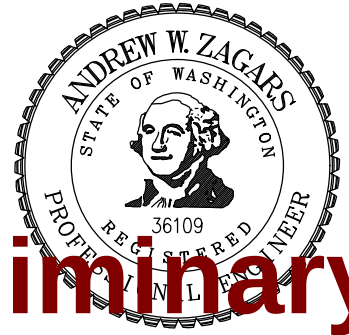

Preliminary

11/09/2016 1:43:04 PM

NOTE:

1. SET TO GRADE AND CONSTRUCT ROAD AND GUTTER TO BE FLUSH WITH FRAME.
2. SEE STD DWG 7-16 FOR TYPE OF GRATE USE.
3. SEE STD DWG 7-15 FOR FRAME DETAIL.
4. SEE STD DWG 7-06 FOR CATCH BASIN INSTALLATION.

CITY OF SAMMAMISH
DEPARTMENT OF PUBLIC WORKS

THROUGH–CURB INLET AND
VERTICAL CURB INSTALLATION

APPROVED BY
CITY ENGINEER _____ DATE _____

REV	DWN	CKD	DATE	FILE
	XXX	XXX	AUG–XX–2015	FIG07–14

REV. NO. X

Exhibit 4

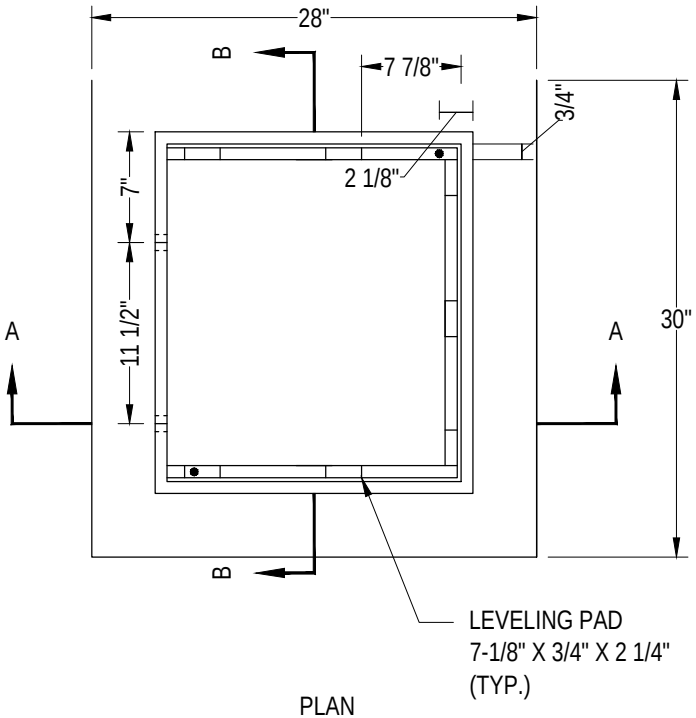

PLAN

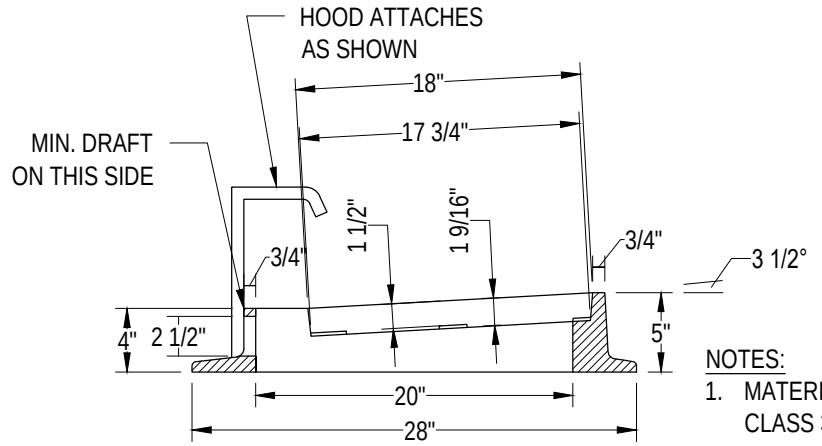

SECTION A-A

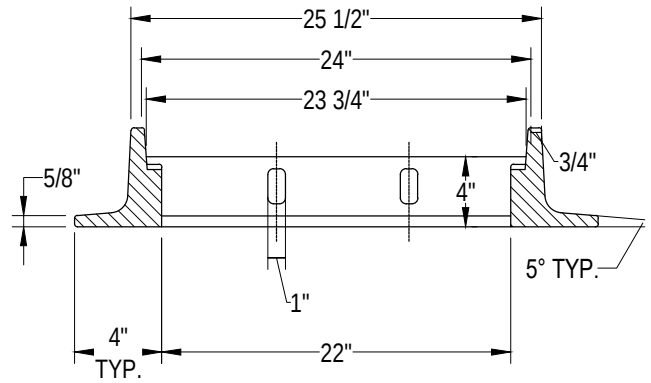

SECTION B-B

NOTES:

1. MATERIAL IS CAST IRON ASTM A48 CLASS 30.
2. SEE STD DWG 7-16 FOR VANED GRATE.
3. PATTERN ON TOP SURFACE OF HOOD SHALL BE 3/16" NON-SKID.
4. BOLT, WASHER, & NUT SHALL BE GALVANIZED OR EROSION RESISTANT.

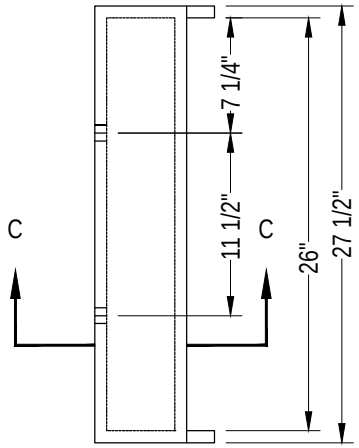

HOOD DETAIL

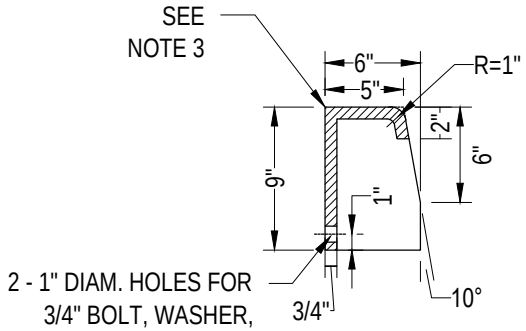

SECTION C-C

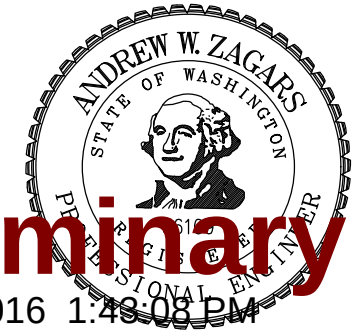

Preliminary

11/09/2016 1:48:08 PM

CITY OF SAMMAMISH
DEPARTMENT OF PUBLIC WORKS

THROUGH-CURB INLET FRAME

APPROVED BY
CITY ENGINEER _____ DATE _____

REV	DWN	CKD	DATE	FILE
	XXX	XXX	AUG-XX-2015	FIG07-15

REV. NO. X

Exhibit 4

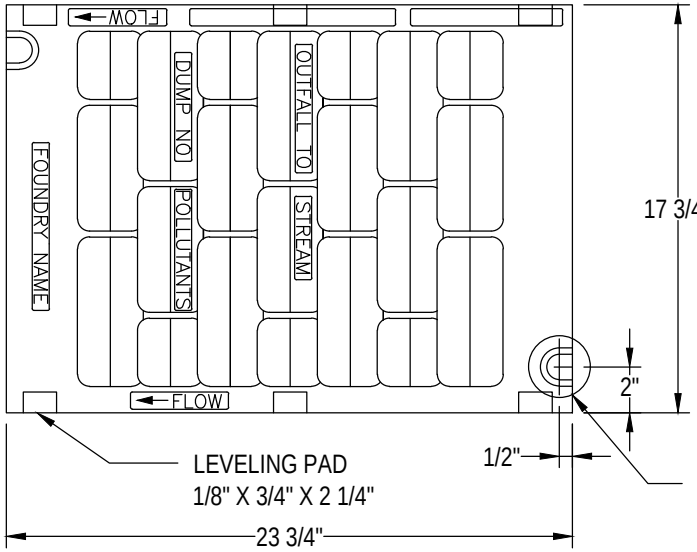

PLAN

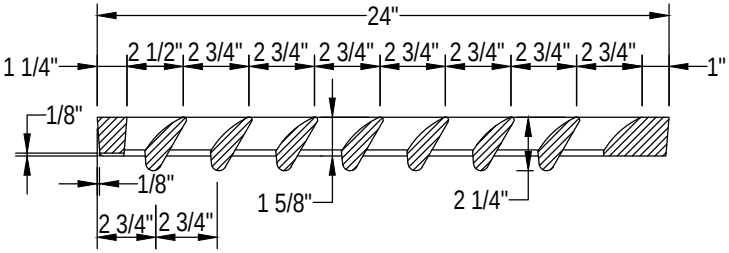

ELEVATION

Preliminary

11/09/2016 1:43:11 PM

NOTES:

1. SELF-LOCK VANED GRATE MANUFACTURER SUBJECT TO APPROVAL BY THE DIRECTOR OR DESIGNEE.
2. USE WITH TWO LOCKING BOLTS 5/8"-11 NC STAINLESS TYPE 304 STEEL SOCKET HEAD (ALLEN HEAD) CAP SCREWS 2" LONG.
3. MATERIAL SHALL BE DUCTILE IRON ASTM A536 GRADE 80-55-06.
4. "OUTFALL TO STREAM DUMP NO POLLUTANTS" MAY BE LOCATED ON THE BORDER AREA.

CITY OF SAMMAMISH
DEPARTMENT OF PUBLIC WORKS

VANED GRATE

APPROVED BY
CITY ENGINEER _____ DATE _____

REV	DWN	CKD	DATE	FILE
	XXX	XXX	AUG-XX-2015	FIG07-16

REV. NO. X

Exhibit 4

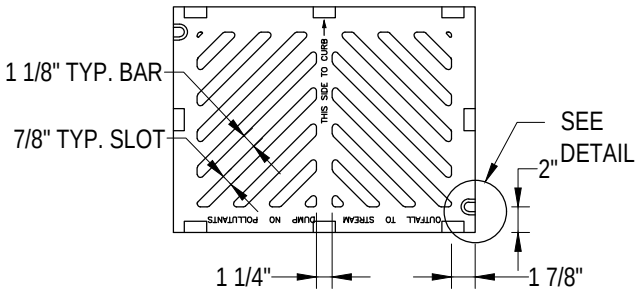

TOP VIEW

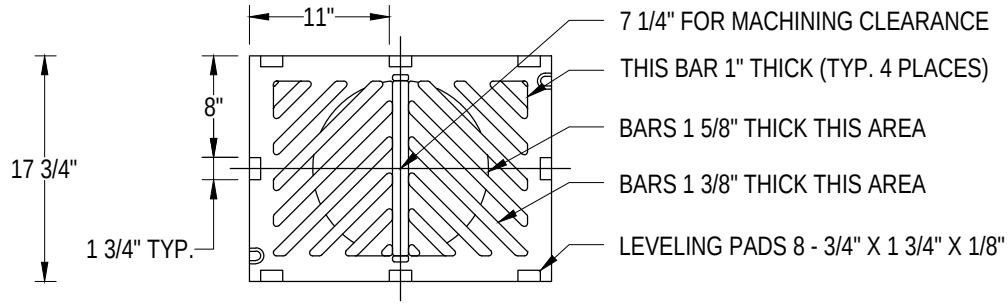

BOTTOM VIEW

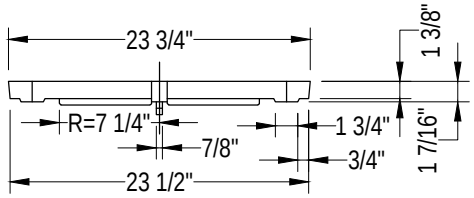

SIDE VIEW

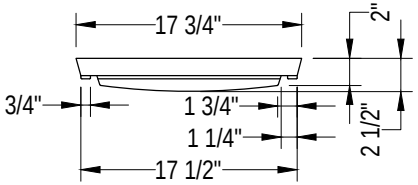

END VIEW

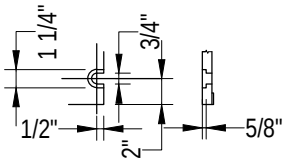

SLOT DETAIL

SEE NOTE ①

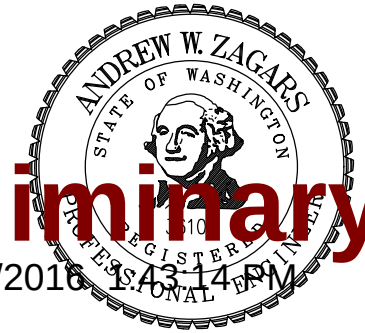

Preliminary

11/09/2016 1:43:14 PM

NOTES:

① SLOT FORMED AND RECESSED FOR 5/8"-11 NC X 2" SOCKET HEAD (ALLEN HEAD) CAP SCREW.

2. ALL CASTINGS SHALL HAVE A BITUMINOUS COATING.

3. GRATE SHALL BE CAST IRON PER ASTM A48 CLASS 30 UNLESS OTHERWISE SPECIFIED.

CITY OF SAMMAMISH
DEPARTMENT OF PUBLIC WORKS

STANDARD GRATE

APPROVED BY
CITY ENGINEER _____ DATE _____

REV	DWN	CKD	DATE	FILE
	XXX	XXX	AUG-XX-2015	FIG07-17

REV. NO. X

Exhibit 4

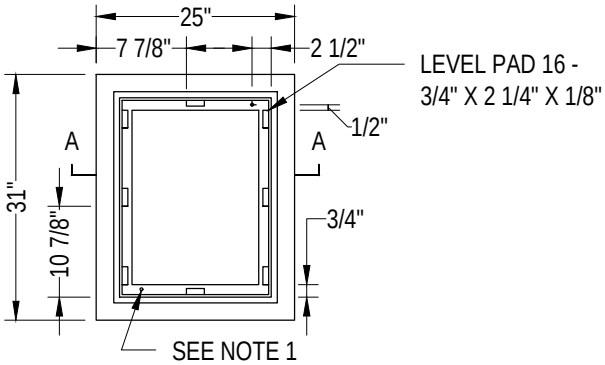

PLAN

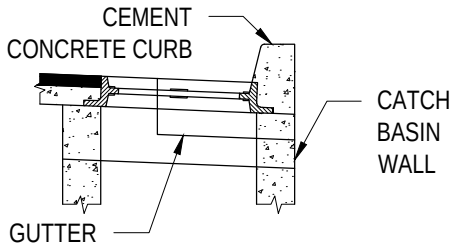

CURB

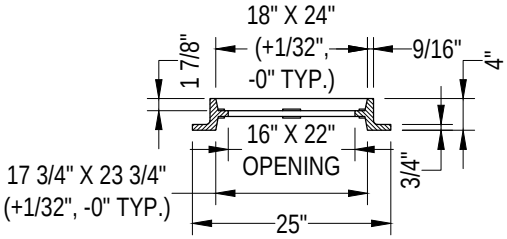

SECTION A-A

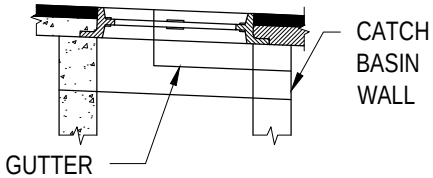

NO CURB

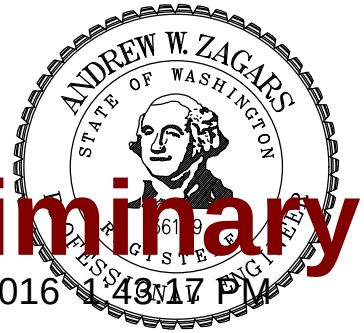

Preliminary

11/09/2016 1:43:17 PM

NOTES:

1. TWO LOCKING BOLTS 5/8"-11 NC STAINLESS TYPE 304 STEEL SOCKET HEAD (ALLEN HEAD) CAP SCREWS 2" LONG WHEN USED WITH SOLID COVER (STND DWG 7-19) OR WHEN SPECIFIED BY ENGINEER.
2. FRAME MATERIAL SHALL BE CAST IRON PER ASTM A48 CLASS 30.
3. SET FRAME TO GRADE & CONSTRUCT ROAD & GUTTER TO BE FLUSH WITH FRAME.

CITY OF SAMMAMISH
DEPARTMENT OF PUBLIC WORKS

STANDARD FRAME INSTALLATION

APPROVED BY
CITY ENGINEER _____ DATE _____

REV	DWN	CKD	DATE	FILE
	XXX	XXX	AUG-XX-2015	FIG07-18

REV. NO. X

Exhibit 4

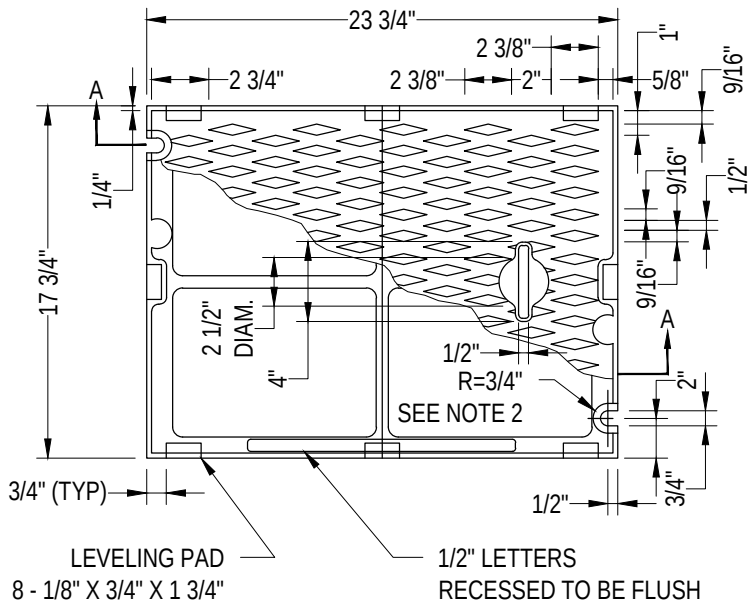

PLAN COVER

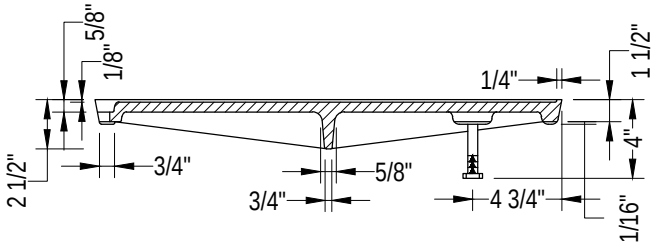

SECTION A-A

NOTES:

1. USE WITH FRAME (SEE STD DWG 7-18) DRILLED & TAPPED FOR LOCKING BOLTS.
2. FOR FRAME AND GRATES WITHIN THE TRAVEL LANE USE, FOUR LOCKING BOLTS.
3. USE WITH TWO LOCKING 5/8"-11 NC STAINLESS STEEL TYPE 304 STEEL SOCKET HEAD (ALLEN HEAD) CAP SCREWS 2" LONG.
4. MATERIAL SHALL BE CAST IRON PER ASTM A48 CLASS 30.

Preliminary

11/09/2016 1:43:21 PM

CITY OF SAMMAMISH
DEPARTMENT OF PUBLIC WORKS

SOLID COVER

APPROVED BY
CITY ENGINEER _____ DATE _____

REV	DWN	CKD	DATE	FILE
	XXX	XXX	AUG-XX-2015	FIG07-19

REV. NO. X

Exhibit 4

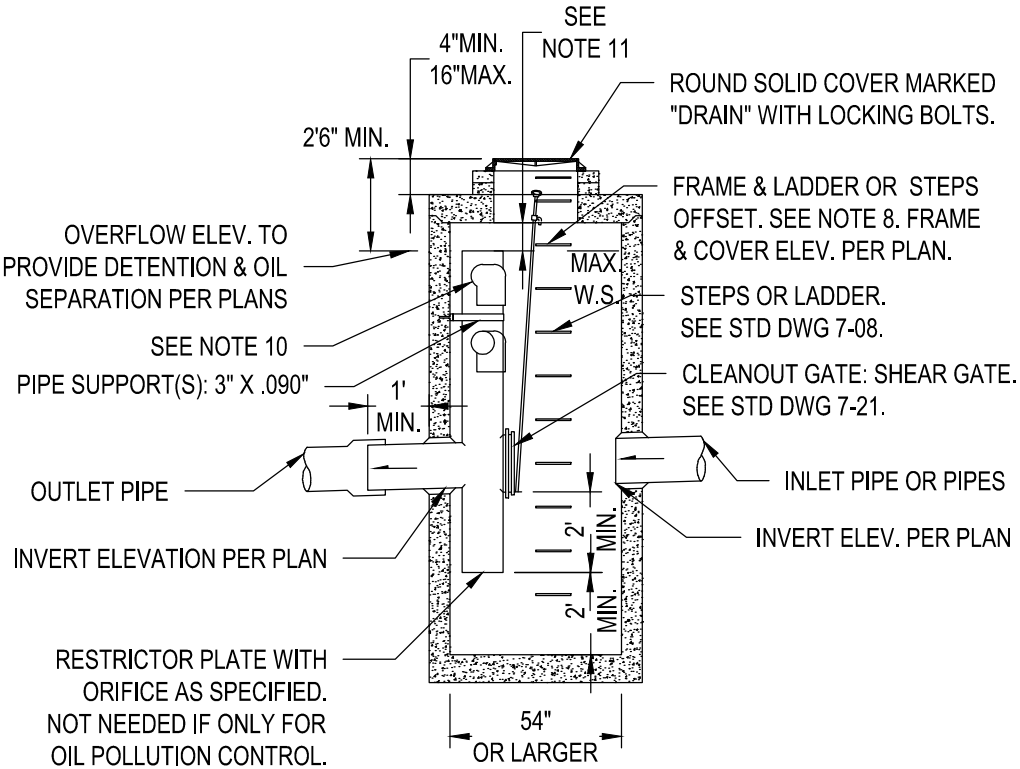

CATCH BASIN TYPE 2

DIAM. AS REQUIRED SEE STD DWG 7-07.

NOTES:

1. PIPE SIZES AND SLOPES: PER PLANS.
2. OUTLET CAPACITY: NOT LESS THAN COMBINED INLETS.
3. EXCEPT AS SHOWN OR NOTED, UNITS SHALL BE CONSTRUCTED IN ACCORDANCE WITH THE REQUIREMENTS FOR CATCH BASIN TYPE 2, 54" MIN. DIAM.
4. PIPE SUPPORTS AND RESTRICTOR/SEPARATOR SHALL BE OF SAME MATERIAL, AND BE ANCHORED AT 3' MAX. SPACING BY 5/8" DIAM. STAINLESS STEEL EXPANSION BOLTS OR EMBEDDED 2" IN WALL.
5. THE RESTRICTOR/SEPARATOR SHALL BE FABRICATED FROM .060" ALUMINUM, OR .064" ALUMINIZED STEEL.
6. OUTLET SHALL BE CONNECTED TO CULVERT OR SEWER PIPE WITH A STANDARD COUPLING BAND FOR CORRUGATED METAL PIPE, OR GROUTED INTO THE BELL OF CONCRETE PIPE.
7. THE VERTICAL RISER STEM OF THE RESTICTOR/SEPARATOR SHALL BE THE SAME DIAM. AS THE HORIZONTAL OUTLET PIPE, WITH AN 8" MIN. DIAM.
8. FRAME AND LADDER OR STEPS OFFSET SO THAT:
   A. CLEANOUT GATE IS VISIBLE FROM TOP.
   B. CLIMB DOWN SPACE IS CLEAR OF RISER AND CLEANOUT GATE.
   C. FRAME IS CLEAR OF CURB.
9. IF METAL OUTLET PIPE CONNECTS TO CEMENT CONCRETE PIPE: OUTLET PIPE TO HAVE SMOOTH O.D. EQUAL TO CONCRETE PIPE I.D. LESS 1/4".
10. MULTI-ORIFICE ELBOWS MAY BE LOCATED AS SHOWN OR ALL ON ONE SIDE OF RISER TO ASSURE LADDER CLEARANCE.
11. 6" MIN. DEPENDING ON DESIGN SPECIFICATION.

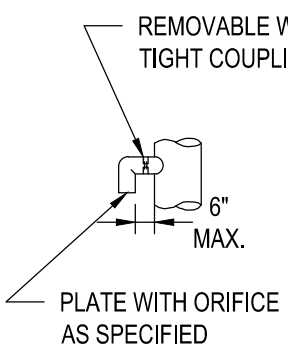

ELBOW DETAIL

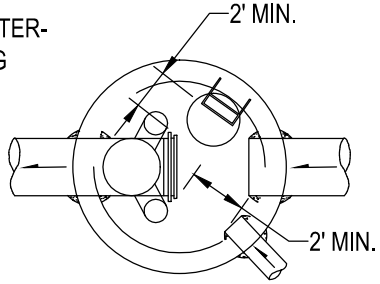

PLAN

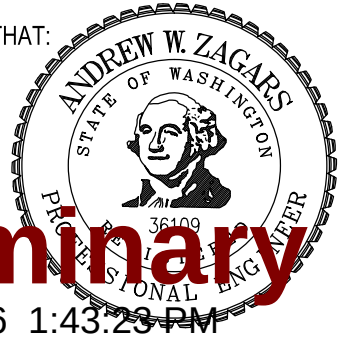

Preliminary

11/09/2016 1:43:23 PM

CITY OF SAMMAMISH
DEPARTMENT OF PUBLIC WORKS

FLOW RESTRICTOR (TEE)

APPROVED BY
CITY ENGINEER _____ DATE _____

REV	DWN	CKD	DATE	FILE
	XXX	XXX	AUG-XX-2015	FIG07-20

REV. NO. X

Exhibit 4

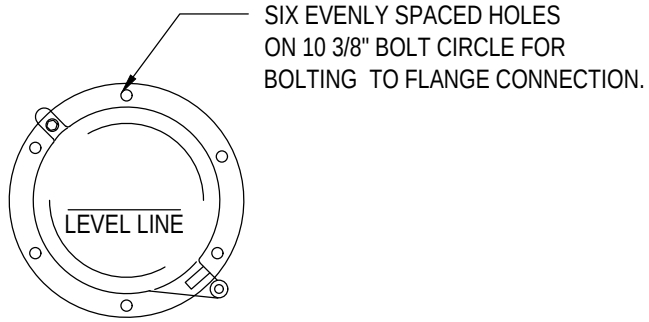

FRONT

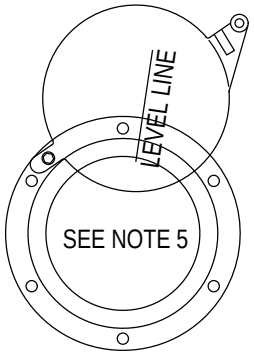

MAXIMUM OPENING OF GATE

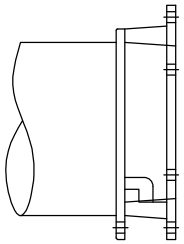

SIDE

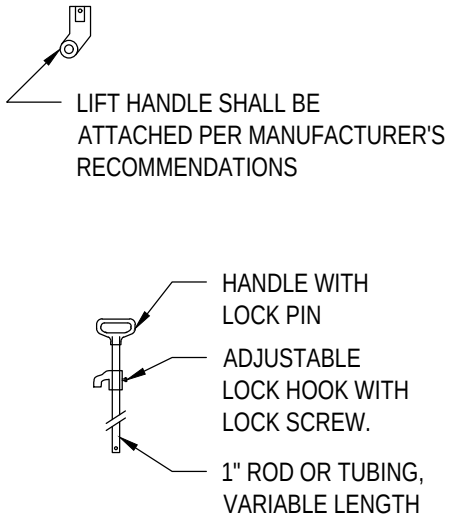

LIFT HANDLE

NOTES:

1. SHEAR GATE SHALL BE ALUMINUM ALLOY PER ASTM B-26-ZG-32a OR CAST IRON ASTM A48 CLASS 308 AS REQUIRED.
2. GATE SHALL BE 8" DIAMETER UNLESS OTHERWISE SPECIFIED.
3. GATE SHALL BE JOINED TO TEE SECTION BY BOLTING (THROUGH FLANGE) OR WELDED.
4. LIFT ROD: AS SPECIFIED BY MANUFACTURER WITH HANDLE EXTENDING TO WITHIN 1 FOOT OF COVER & ADJUSTABLE HOOK LOCK FASTENED TO FRAME OR UPPER HANDHOLD.
5. GATE SHALL NOT OPEN BEYOND THE CLEAR OPENING BY LIMITED HINGE MOVEMENT, STOP TAB, OR SOME OTHER DEVICE.
6. NEOPRENE RUBBER GASKET REQUIRED BETWEEN RISER MOUNTING FLANGE AND GATE FLANGE.
7. MATING SURFACES OF LID AND BODY TO BE MACHINED FOR PROPER FIT.
8. FLANGE MOUNTING BOLTS SHALL BE 3/8" DIAMETER STAINLESS STEEL.
9. ALTERNATIVE CLEANOUT/SHEAR GATES TO THE DESIGN SHOWN ARE ACCEPTABLE, PROVIDED THEY MEET THE MATERIAL SOECIFICATIONS ABOVE AND HAVE A SIX BOLT, 10 3/8" BOLT CIRCLE FOR BOLTING TO THE FLANGE CONNECTION.

Preliminary

11/09/2016 1:43:26 PM

CITY OF SAMMAMISH DEPARTMENT OF PUBLIC WORKS			
FROP-T SHEAR GATE DETAIL			
APPROVED BY CITY ENGINEER _____ DATE _____			
REV	DWN XXX	CKD XXX	DATE AUG-XX-2015	FILE FIG07-21

REV. NO. X

Exhibit 4

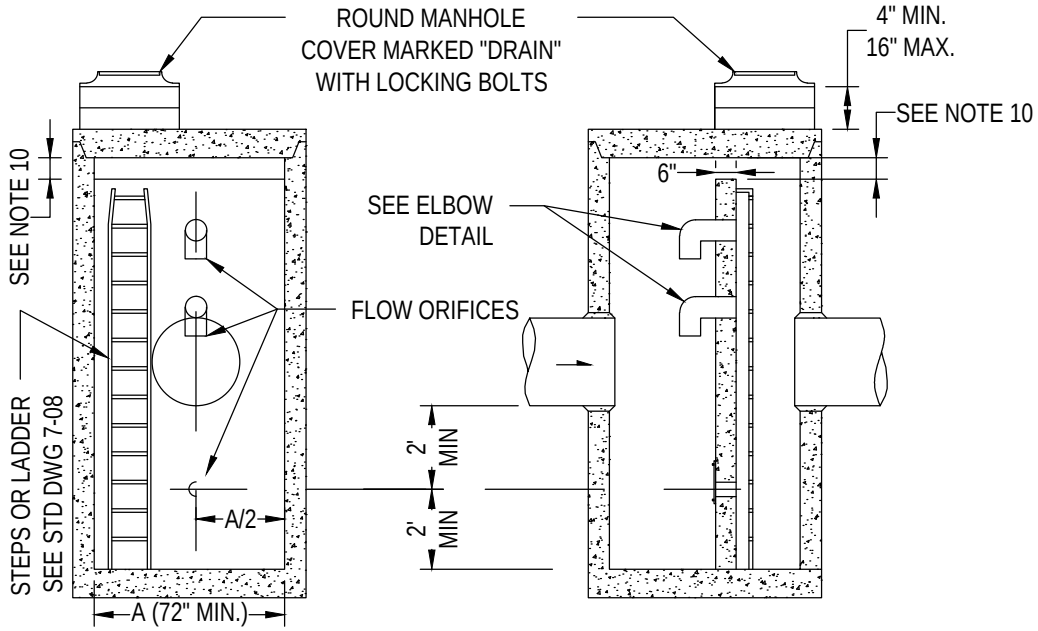

SECTION A-A

ELEVATION

SECTION B-B

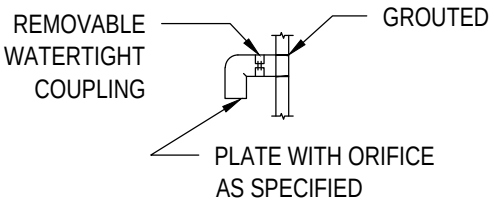

ELBOW DETAIL

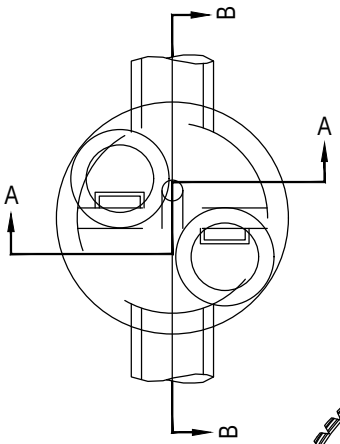

PLAN

NOTES:

1. PIPE SIZE, SLOPES, AND ALL ELEVATIONS: PER PLANS.
2. OUTLET CAPACITY: NOT LESS THAN COMBINED INLETS.
3. CATCH BASIN: TYPE 2 TO BE CONSTRUCTED IN ACCORDANCE WITH STD DWG 7-07 & AASHTO M199 UNLESS OTHERWISE SPECIFIED.
4. COVERS: ROUND, SOLID MARKED "DRAIN" WITH LOCKING BOLTS.
5. ORIFICES: SIZED & LOCATED AS REQUIRED, WITH LOWEST ORIFICE MIN 2" FROM BASE.
6. BAFFLE WALL SHALL HAVE #4 REINFORCEMENT BAR AT 12" SPACING EACH WAY.
7. PRECAST BAFFLE WALL SHALL BE KEYED & GROUTED IN PLACE.
8. BOTTOM ORIFICE PLATE TO BE 1/4" MIN GALVANIZED STEEL & ATTACHED WITH 1/2" STAINLESS STEEL BOLTS. OMIT ORIFICE PLATE ID ONLY FOR OIL SEPARATION.
9. THE RESTRICTOR/SEPARATOR SHALL BE FABRICATED FROM .060" ALUMINUM, OR .064" ALUMINIZED STEEL.
10. 6" MIN. DEPENDING ON DESIGN SPECIFICATION.

Preliminary

11/09/2016 1:43:29 PM

CITY OF SAMMAMISH
DEPARTMENT OF PUBLIC WORKS

FLOW RESTRICTOR (BAFFLE)

APPROVED BY
CITY ENGINEER _____ DATE _____

REV	DWN	CKD	DATE	FILE
	XXX	XXX	AUG-XX-2015	FIG07-22

REV. NO. X

Exhibit 4

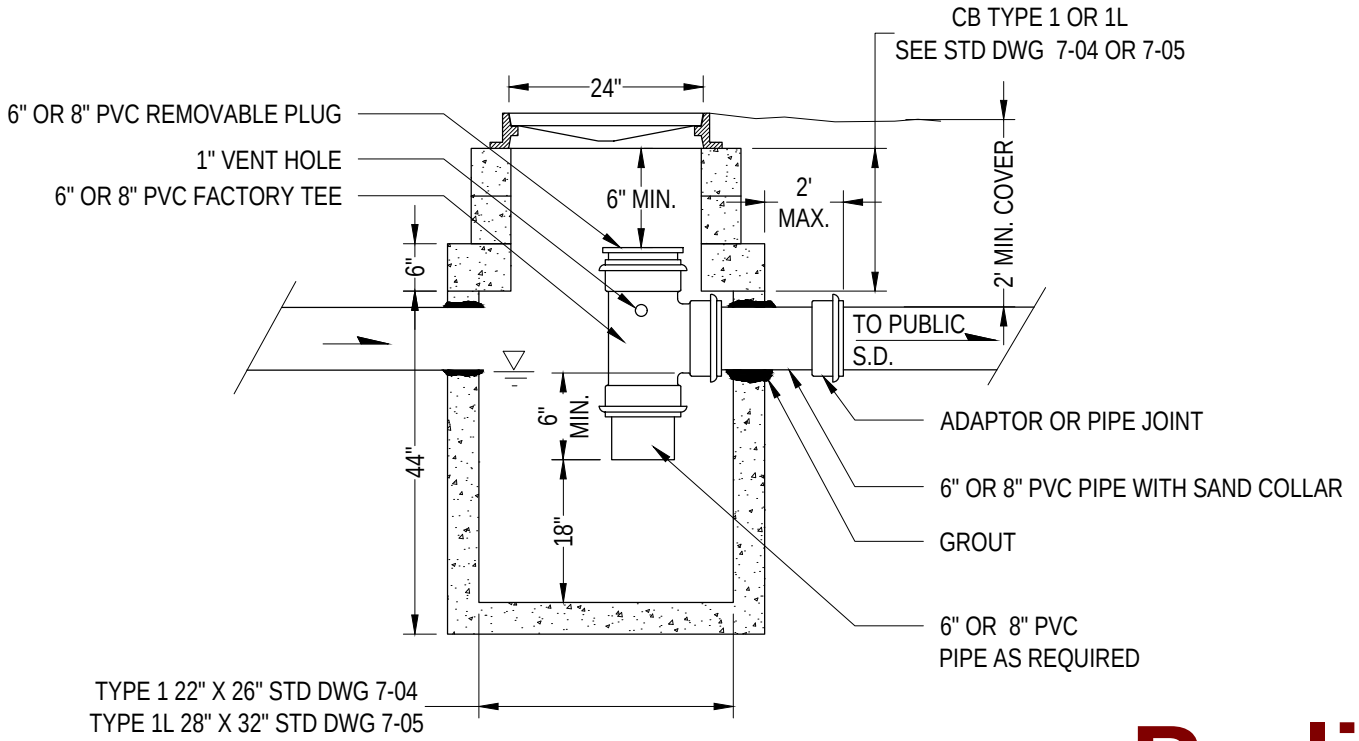

Preliminary

11/09/2016 1:43:31 PM

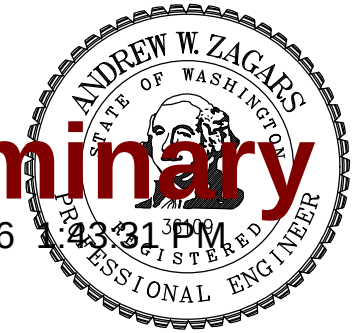

NOTE:

1. MAX. RIM EL. INV. EL. DIFFERANCE GREATER THAN 5' SEE STD DWG 7-15.

2. GROUT ALL JOINTS INSIDE AND OUTSIDE.

CITY OF SAMMAMISH
DEPARTMENT OF PUBLIC WORKS

FLOATABLE MATERIAL
SEPARATOR – 6" OR 8" PIPE

APPROVED BY
CITY ENGINEER _____ DATE _____

REV	DWN	CKD	DATE	FILE
	XXX	XXX	AUG-XX-2015	FIG07-23

REV. NO. X

Exhibit 4

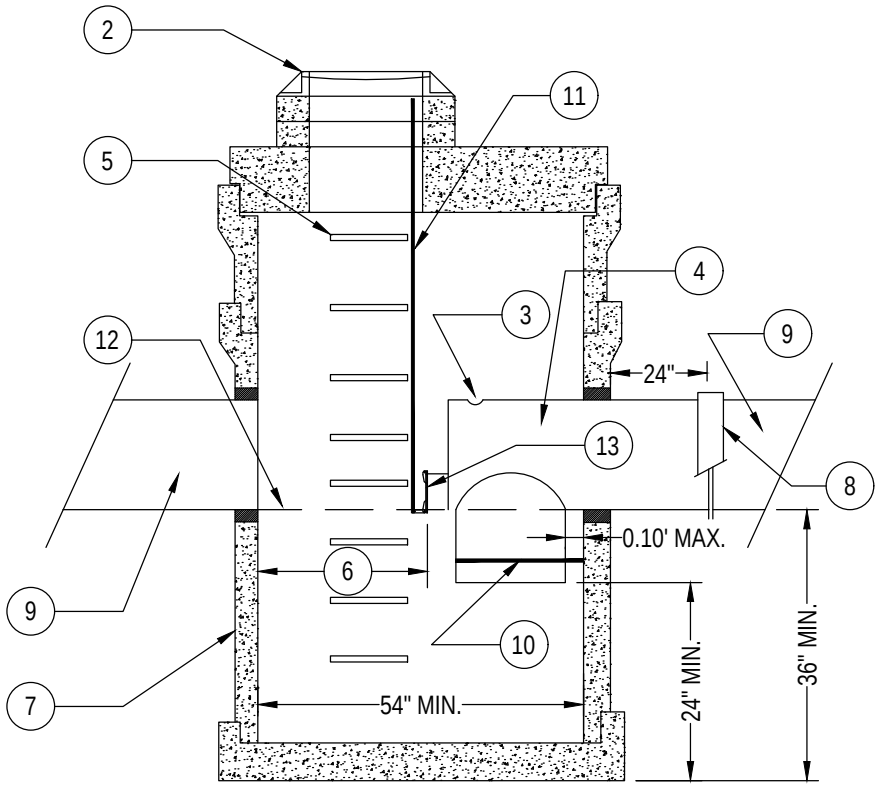

ELEVATION

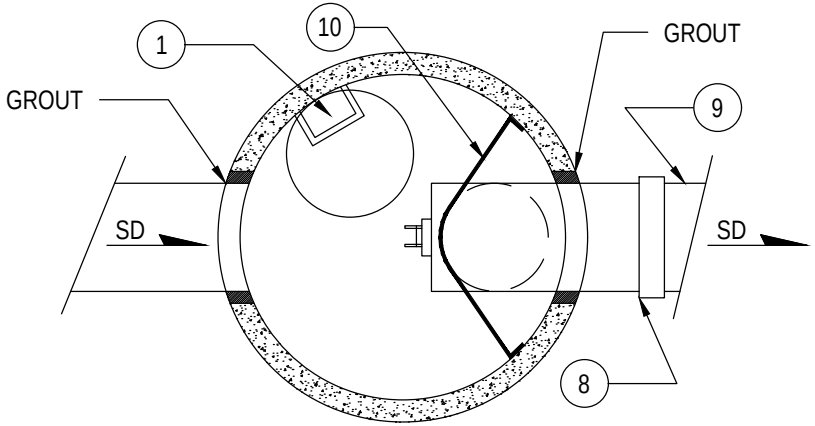

PLAN

NOTES:

1. INSTALL MANHOLE ACCESS SO THAT LIFT GATE IS VISIBLE THROUGH OPENING AND STEPS CLEAR INLET AND RESTRICTOR UNIT.
2. INSTALL SOLID LID WITH LOCKING COVER, FOR MANHOLES OR WHEN IT IS TO BE A CATCH BASIN THEN USE STD DWG 7-06.
3. 1" VENT HOLE.
4. SEPARATOR ASSEMBLY.
5. POLYPROPYLENE LADDER OR STEPS: SEE STD DWG 7-08.
6. MIN CLEARANCE: 36" FOR OUTLETS OF 24" AND LARGER 18" FOR OUTLETS OF 18" AND SMALLER.
7. 54" TYPE 2 CB OR LARGER.
8. BAND STRAP WITH GASKET.
9. SEE PLAN AND SPECIFICATIONS FOR SIZE AND TYPE OF PIPE ENTERING AND EXITING CB.
10. SECURE SEPARATOR TO CB WITH 8 STAINLESS STEEL STRAP. BOLT TO CB WALL WITH STAINLESS STEEL ANCHOR BOLTS AND TACK WELD TO SEPARATOR UNIT.
11. SHEAR GATE LIFT HANDLE SEE STD DWG 7-21.
12. INV. EL.: SEE PLANS AND SPECIFICATIONS.
13. SHEAR LATE CLEAN OUT, 8" MIN. DIA., 12" DIA. FOR 24" DIA. AND LARGER OUTLET PIPE.
14. GROUT ALL JOINTS INSIDE AND OUTSIDE.

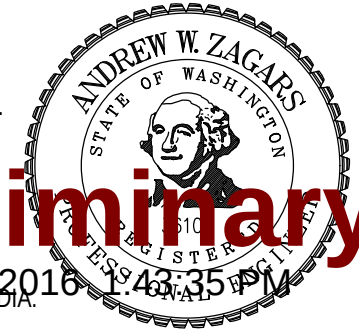

Preliminary
11/09/2016 1:43:35 PM

CITY OF SAMMAMISH DEPARTMENT OF PUBLIC WORKS			
FLOATABLE MATERIAL SEPARATOR – 12" & LARGER			
APPROVED BY CITY ENGINEER _____ DATE _____			
REV	DWN XXX	CKD XXX	DATE AUG-XX-2015	FILE FIG07-24

REV. NO. X

Exhibit 4

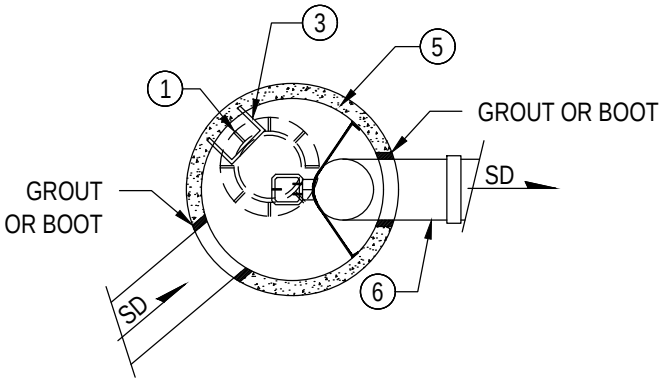

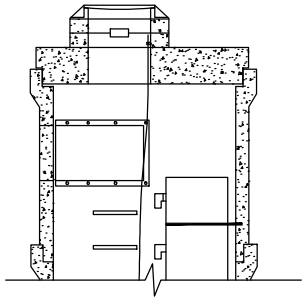

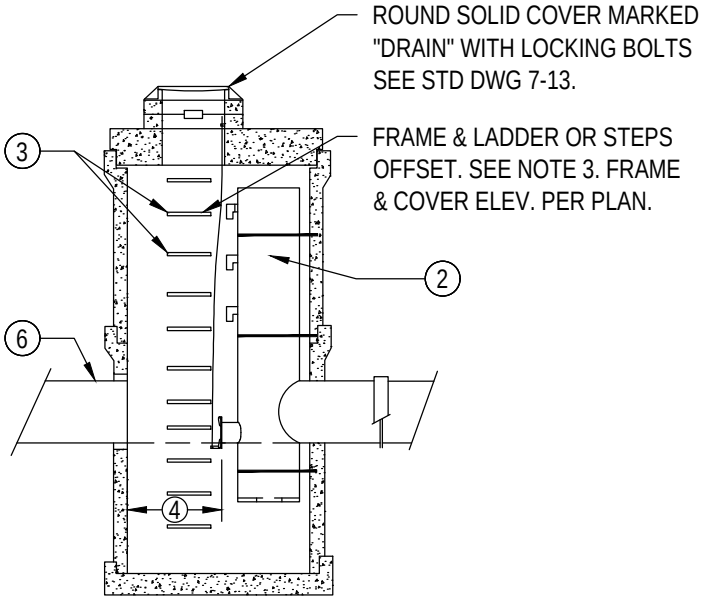

ELEVATION

NOTES:

1. INSTALL 1-24" DIA. MH. ACCESS PER STD DWG 7-12, SO THAT THE LIFT GATE IS VISIBLE AND THE STEPS ARE CLEAR AND DIRECTLY ACCESSIBLE.

2. FLOW RESTRICTOR UNIT - SEE STD DWG 7-20.

3. POLYPROPLENE PLASTIC STEP OR LADDER, SEE STND DWG 7-08. OFFSET STEPS OR LADDER FROM FRAME SO THAT:
   A. CLEANOUT GATE IS VISIBLE FROM TOP.
   B. CLIMB DOWN SPACE IS CLEAR OF RISER AND CLEANOUT GATE.
   C. FRAME IS CLEAR OF CURB.

4. MIN CLEARANCE: 36" FOR OUTLETS OF 24" AND LARGER 18" FOR OUTLETS OF 18" AND SMALLER.

5. 54" OR 60" TYPE 2 CB.

6. SEE PLAN AND SPECIFICATIONS FOR SIZE AND TYPE OF PIPES ENTERING AND EXITING CB.

Preliminary

11/09/2016 1:43:39 PM

CITY OF SAMMAMISH DEPARTMENT OF PUBLIC WORKS			
CONTROL STRUCTURE – 54" DIAMETER			
APPROVED BY CITY ENGINEER _____ DATE _____			
REV	DWN XXX	CKD XXX	DATE AUG-XX-2015	FILE FIG07-25

REV. NO. X

Exhibit 4

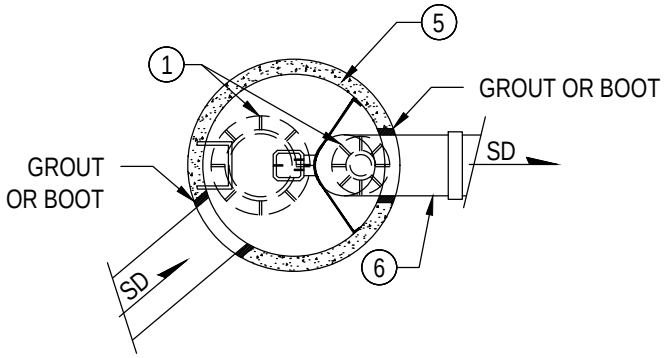

NOTES:

1. INSTALL 1-18" AND 1-24" DIA. MH. ACCESS PER STD DWG 7-12, SO THAT THE LIFT GATE IS VISIBLE AND THE STEPS ARE CLEAR AND DIRECTLY ACCESSIBLE.

2. FLOW RESTRICTOR UNIT - SEE STD DWG 7-20.

3. POLYPROPLENE PLASTIC STEP OR LADDER, SEE STND DWG 7-08. OFFSET STEPS OR LADDER FROM FRAME SO THAT:
   A. CLEANOUT GATE IS VISIBLE FROM TOP.
   B. CLIMB DOWN SPACE IS CLEAR OF RISER AND CLEANOUT GATE.
   C. FRAME IS CLEAR OF CURB.

4. 70" TYPE 2 CB OR LARGER.

5. SEE PLAN AND SPECIFICATIONS FOR SIZE AND TYPE OF PIPES ENTERING AND EXITING CB.

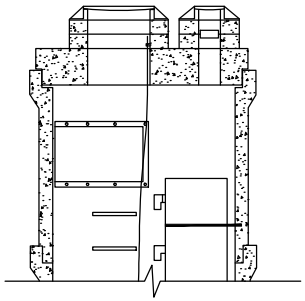

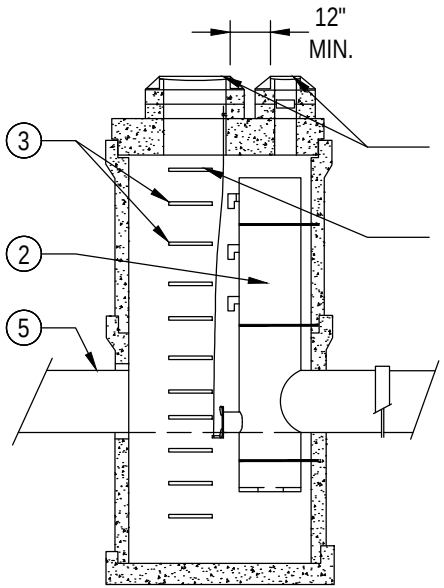

ELEVATION

Preliminary

11/09/2016 11:43:42 PM

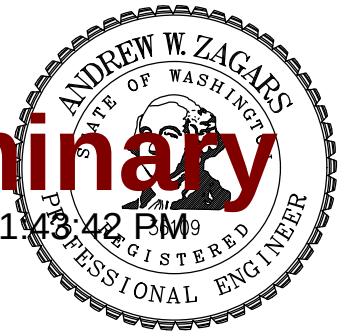

CITY OF SAMMAMISH
DEPARTMENT OF PUBLIC WORKS

CONTROL STRUCTURE – 72" DIAMETER OR LARGER

APPROVED BY
CITY ENGINEER _____ DATE _____

REV	DWN	CKD	DATE	FILE
	XXX	XXX	AUG-XX-2015	FIG07-26

REV. NO. X

Exhibit 4

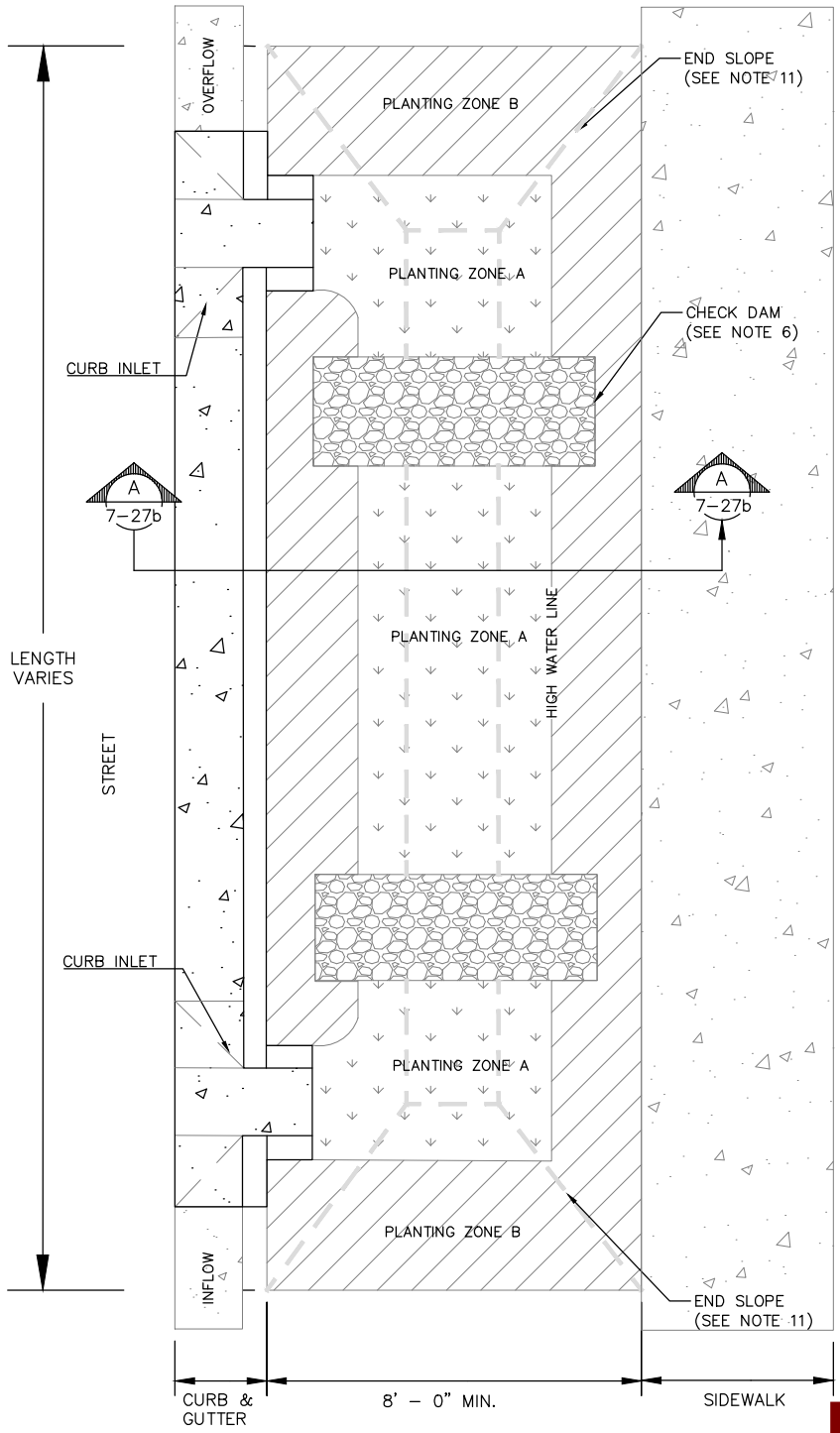

NOTES:

1. AREA AND DEPTH OF FACILITY ARE BASED UPON ENGINEERING CALCULATIONS AND RIGHT OF WAY CONSTRAINTS.
2. LONGITUDINAL SLOPE OF SWALE MATCHES ROAD.
3. INCLUDE BEGINNING AND ENDING STATIONS FOR EACH FACILITY. PROVIDE STATIONS AND ELEVATIONS AT EVERY INLET, OUTLET, AND CHECK DAM.
4. SIDEWALK ELEVATION MUST BE SET ABOVE INLET AND OUTLET ELEVATIONS TO ALLOW OVERFLOW TO DRAIN TO STREET BEFORE SIDEWALK.
5. SEE SHEET 3-09a FOR CURB INLET DETAILS.
6. CHECK DAMS MAYBE REQUIRED.
7. SEE CITY SURFACE WATER DESIGN MANUAL FOR FACILITY MEDIA REQUIREMENTS.
8. SPECIAL REQUIREMENTS FOR WATER LINES, METERS, AND FIRE HYDRANTS, SEE WATER DISTRICT REQUIREMENTS.
9. UTILITY LINES MAY NEED TO BE SLEEVED OR RELOCATED.
10. CURB AND GUTTER STANDARD DRAWING.
11. END SLOPES OF SWALE SHALL BE A MINIMUM OF 1:3.
12. 24" DEEP ROOT BARRIER REQUIRED WITH TREE PLANTINGS.

IMPORTANT: Utility conflicts and existing conditions can create major design variables. Locate utilities and survey existing conditions prior to beginning design work.

Preliminary

11/09/2016 1:43:45 PM

PLAN VIEW

-NOT TO SCALE-

CITY OF SAMMAMISH
DEPARTMENT OF PUBLIC WORKS

SWALE
BIORETENTION

APPROVED BY
CITY ENGINEER _____ DATE _____

REV	DWN	CKD	DATE	FILE
	LG		SEPT-7-2016	7-27a

REV. NO. X

Exhibit 4

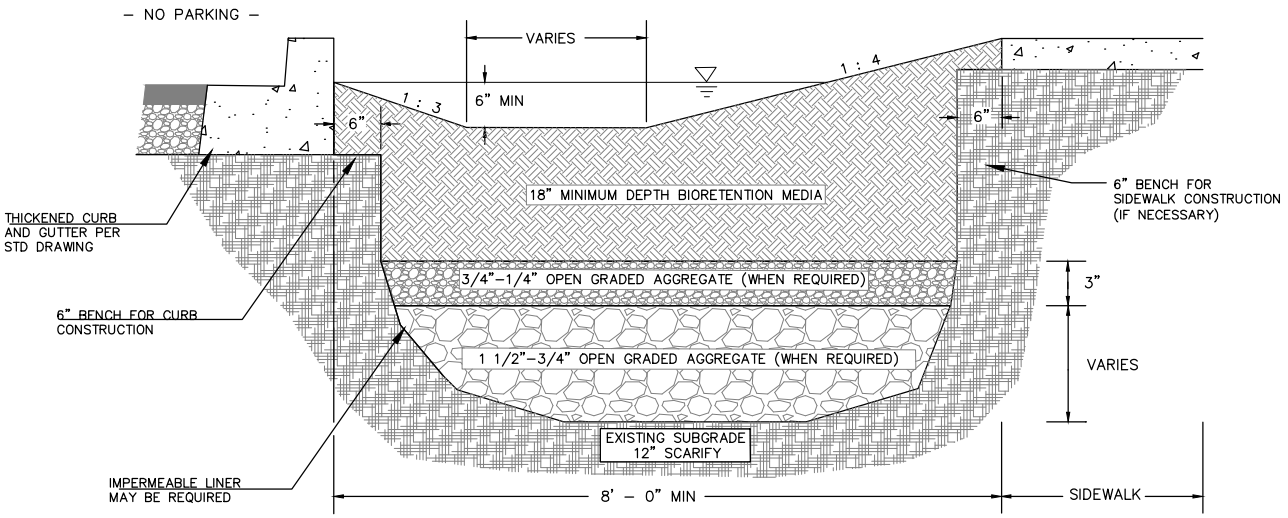

SECTION A–A
BIORETENTION WITHOUT PARKING

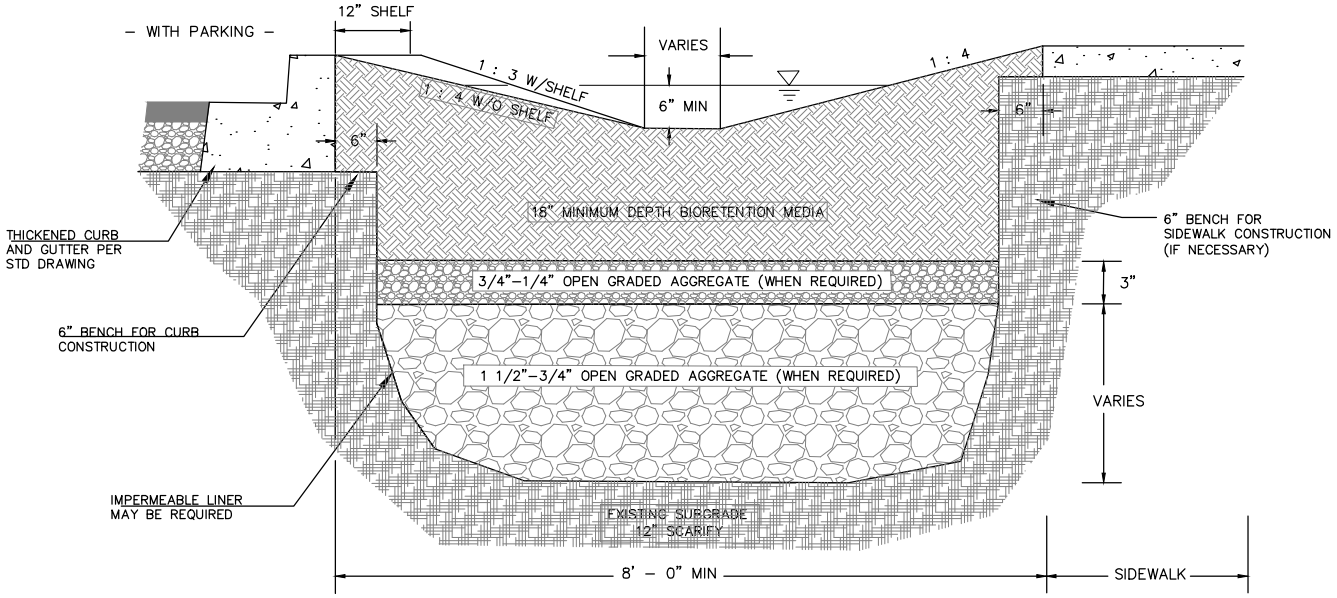

SECTION A–A
BIORETENTION WITH PARKING

Preliminary
11/09/2016 1:43:50 PM

–NOT TO SCALE–

CITY OF SAMMAMISH
DEPARTMENT OF PUBLIC WORKS

SWALE SECTION
BIORETENTION

APPROVED BY
CITY ENGINEER _____ DATE _____

REV	DWN	CKD	DATE	FILE
	LG		SEPT–7–2016	7–27b

REV. NO. X

Exhibit 4

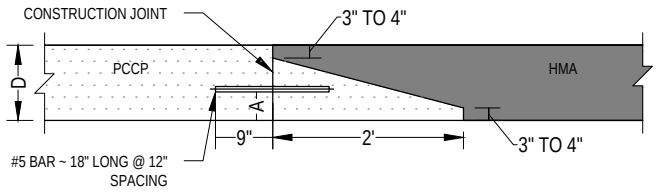

ELEVATION VIEW
HMA TRANSITION DETAIL

SLAB THICKNESS (D)	A
12"	5"
D	D/2 - 1"

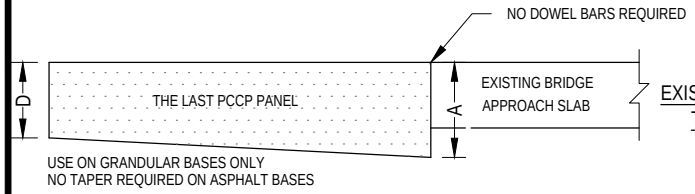

ELEVATION VIEW
EXISTING APPROACH SLAB
TRANSITION DETAIL

SLAB THICKNESS (D)	A
12"	15"
D	1.25" - D

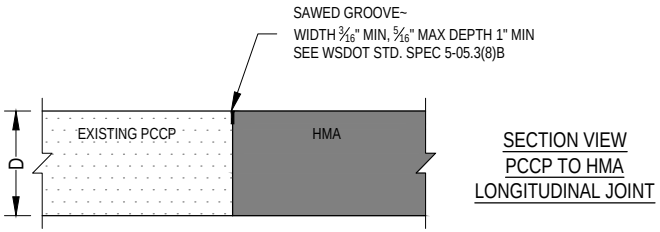

SECTION VIEW
PCCP TO HMA
LONGITUDINAL JOINT

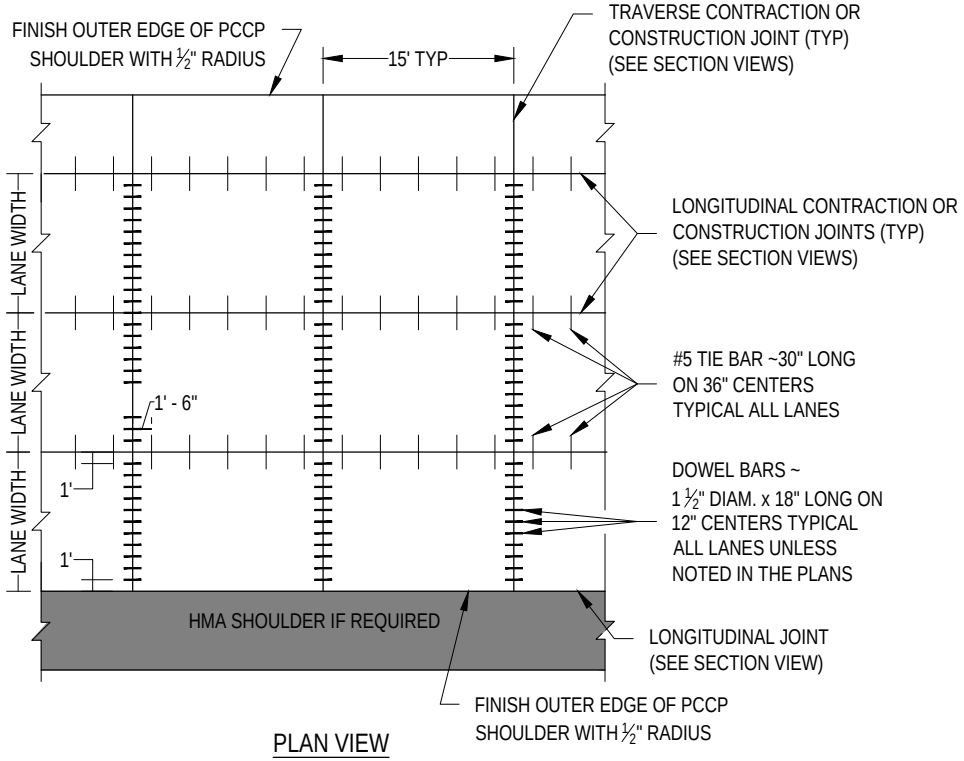

PLAN VIEW

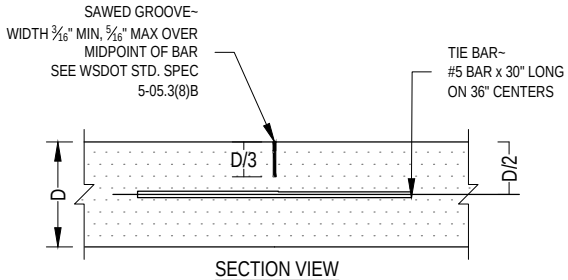

SECTION VIEW
LONGITUDINAL CONTRACTION JOINT

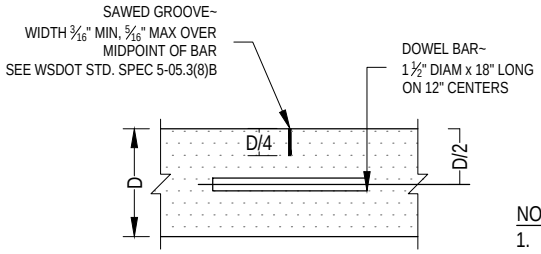

SECTION VIEW
TRAVERSE CONTRACTION JOINT

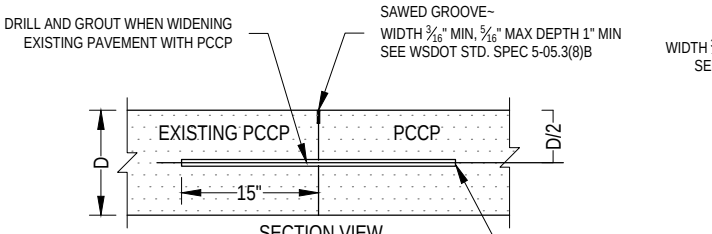

SECTION VIEW
PCCP TO PCCP
LONGITUDINAL CONTRACTION JOINT

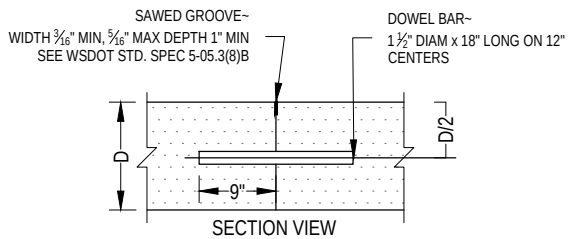

SECTION VIEW
TRAVERSE CONSTRUCTION JOINT

Preliminary
11/09/2016 1:43:53 PM

NOTES:
1. MATERIAL - WSDOT CONCRETE CLASS 4000psi.

CITY OF SAMMAMISH
DEPARTMENT OF PUBLIC WORKS

RIGID PAVEMENT
RESTORATION DETAILS

APPROVED BY
CITY ENGINEER _____ DATE _____

REV	DWN	CKD	DATE	FILE
	XXX	XXX	AUG-XX-2015	FIG08-01

REV. NO. X

Exhibit 4

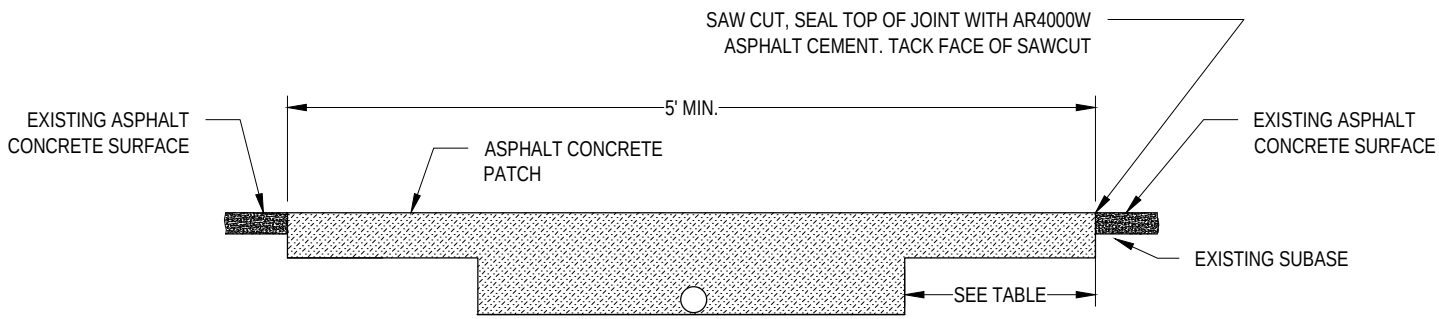

NOTES:

1. ASPHALT CONCRETE MIX SHALL BE HMA CL 1/2 INCH.
2. ASPHALT PATCHING AND TRENCH BACKFILL PER STD DWG 02-05A.
3. SAW CUTS LIMITS MAY BE REVISED BASED UPON EXISTING CONDITIONS. PATCH MAY NEED TO EXTEND TO CONFIDENT ASPHALT.
4. SAWCUTS NEED TO BE NEAT AND CLEAN PRIOR TO PAVING.

PAVEMENT CUT DIMENSIONS	
TRENCH DEPTH (FT)	MINIMUM CUT BEYOND TRENCH (FT) ALL FOUR SIDES
10	2.5
12	3.0
14	3.5
16	4.0
18	4.5
20	5.0
PAVEMENT LESS THAN 5 YEARS OLD	ADDITIONAL RESTORATION WORK MAY BE REQUIRED

Preliminary

11/09/2016 1:43:56 PM

CITY OF SAMMAMISH
DEPARTMENT OF PUBLIC WORKS

FLEXIBLE PAVEMENT PATCHING

APPROVED BY
CITY ENGINEER _____ DATE _____

REV	DWN	CKD	DATE	FILE
	XXX	XXX	AUG-XX-2015	FIG08-02

REV. NO. X

Exhibit 4

BUFFER DATA										
LONGITUDINAL BUFFER SPACE = B										
SPEED (MPH)	25	30	35	40	45	50	55	60	65	70
LENGTH (FEET)	155	200	250	305	360	425	495	570	645	-

BUFFER VEHICLE ROLL AHEAD DISTANCE = R	
TRANSPORTABLE ATTENUATOR MINIMUM HOST VEHICLE WEIGHT 15,000 LBS. THE MAXIMUM WEIGHT SHALL BE IN ACCORDANCE WITH THE MANUFACTURERS RECOMMENDATION.	30 FEET MIN. TO 100 FEET MAX.
PROTECTIVE VEHICLE MAY BE A WORK VEHICLE STRATEGICALLY LOCATED TO SHIELD THE WORK AREA.	NO SPECIFIED DISTANCE REQUIRED

SIGN SPACING = X (1)		
RURAL HIGHWAYS	60 / 65 MPH	800' ±
RURAL ROADS	45 / 55 MPH	500' ±
RURAL ROADS & URBAN ARTERIALS	35 / 40 MPH	350' ±
RURAL ROADS, URBAN ARTERIALS, RESIDENTIAL & BUSINESS DISTRICTS	25 / 30 MPH	200' ± (2)
URBAN STREETS	25 MPH OR LESS	100' ± (2)

(1) ALL SPACING MAY BE ADJUSTED TO ACCOMMODATE INTERSECTIONS AND DRIVEWAYS.
(2) THIS SPACING MAY BE REDUCED IN URBAN AREAS TO FIT ROADWAY CONDITIONS.

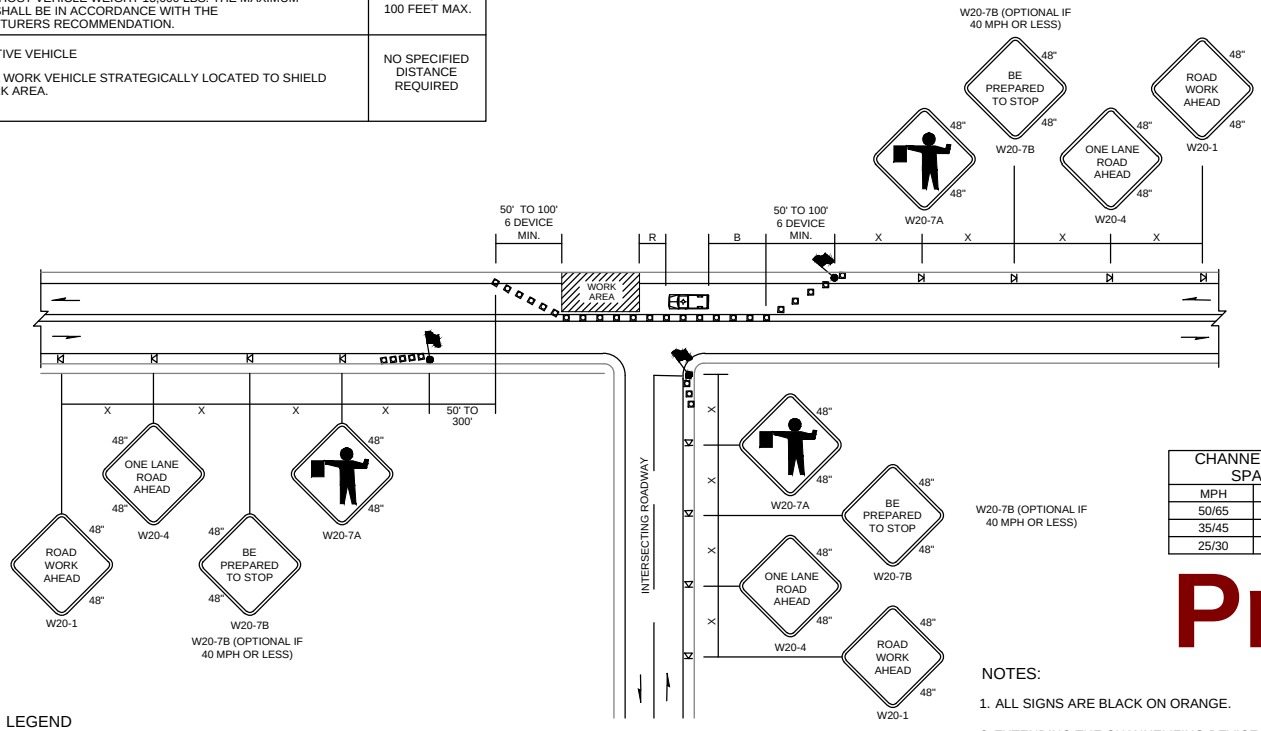

CHANNELIZATION DEVICE SPACING (FEET)		
MPH	TAPER	TANGENT
50/65	10 TO 20	80
35/45	10 TO 20	60
25/30	10 TO 20	40

LEGEND

- FLAGGING STATION
- TEMPORARY SIGN LOCATION
- CHANNELIZING DEVICES
- PROTECTIVE VEHICLE

ONE-LANE, TWO-WAY TRAFFIC CONTROL

WITH FLAGGERS

NOT TO SCALE

NOTES:

1. ALL SIGNS ARE BLACK ON ORANGE.
2. EXTENDING THE CHANNELIZING DEVICE TAPER ACROSS SHOULDER IS RECOMMENDED.
3. NIGHT WORK REQUIRES ADDITIONAL ROADWAY LIGHTING AT FLAGGING STATIONS. SEE THE WSDOT STD SPECIFICATIONS FOR ADDITIONAL DETAILS.
4. SEE SPECIAL PROVISIONS FOR WORK HOUR RESTRICTIONS.

Preliminary

11/09/2016 1:43:59 PM

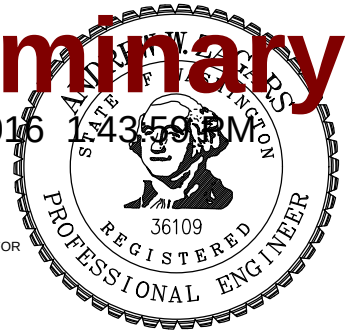

CITY OF SAMMAMISH
DEPARTMENT OF PUBLIC WORKS

ONE-LANE, TWO-WAY TRAFFIC CONTROL WITH FLAGGERS

APPROVED BY
CITY ENGINEER _____ DATE _____

REV	DWN	CKD	DATE	FILE
	XXX	XXX	AUG-XX-2015	FIG09-01

REV. NO. X

Exhibit 4

MINIMUM TAPER LENGTH = L (feet)										
LANE WIDTH (feet)	Posted Speed (mph)									
	25	30	35	40	45	50	55	60	65	70
10	105	150	205	270	450	500	550	-	-	-
11	115	165	225	295	495	550	605	660	-	-
12	125	180	245	320	540	600	660	720	780	-

CHANNELIZATION DEVICE SPACING (feet)		
MPH	TAPER	TANGENT
50/65	40	80
35/45	30	60
25/30	20	40

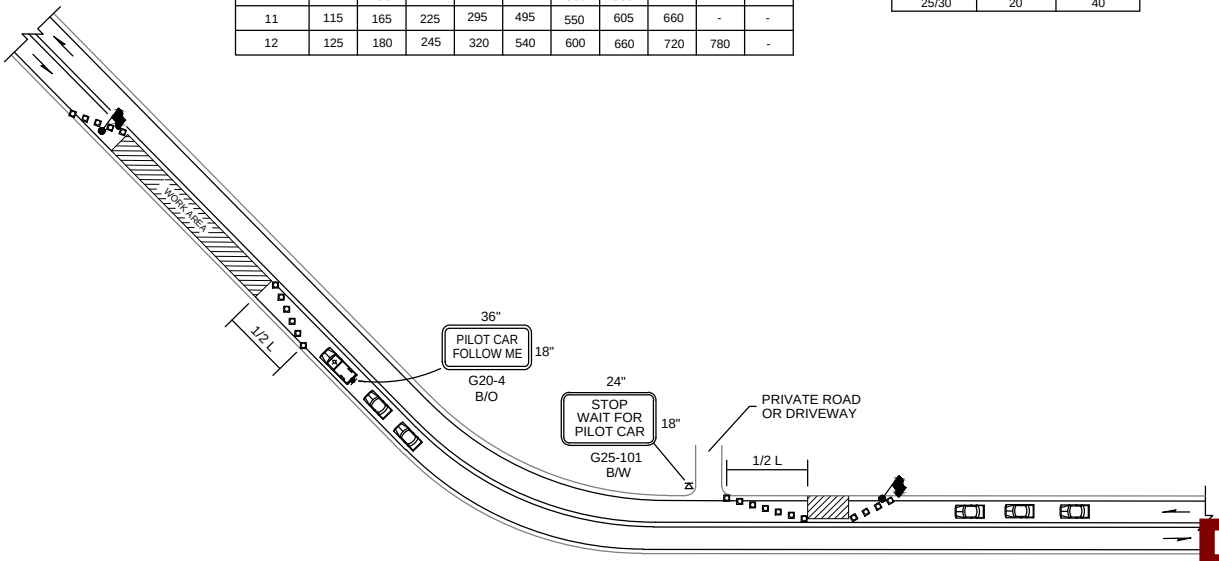

Preliminary

11/09/2016 11:44:02 PM

LEGEND

- FLAGGING STATION
- TEMPORARY SIGN LOCATION
- CHANNELIZING DEVICES
- PILOT VEHICLE
- MOTORIST VEHICLE

NOTES:

1. SEE STD DWG 9-01 FOR ADDITIONAL SIGNING AND FLAGGING DETAILS NOT SHOWN.
2. CHANNELIZING DEVICES ARE RECOMMENDED ALONG CENTERLINE TO SEPARATE TRAFFIC FROM WORK OPERATION. DEVICES ARE REQUIRED AT TAPERS TO SHIFT TRAFFIC MOVEMENT BETWEEN LANES AND TO PROTECT FLAGGING STATIONS.
3. SIGN G25-101 IS RECOMMENDED FOR NON-STOP SIGN CONTROLLED APPROACHES SUCH AS PRIVATE ROADS AND DRIVEWAYS. THIS SIGN IS NOT REQUIRED TO BE ALUMINUM SUBSTRATE AND CAN BE MADE OF ALTERNATIVE MATERIALS.

ANDREW W. ZAGARS
STATE OF WASHINGTON
36109
REGISTERED
PROFESSIONAL ENGINEER

CITY OF SAMMAMISH
DEPARTMENT OF PUBLIC WORKS

PILOT CAR OPERATION

APPROVED BY
CITY ENGINEER _____ DATE _____

REV	DWN	CKD	DATE	FILE
	XXX	XXX	AUG-XX-2015	FIG09-02

REV. NO. X

Exhibit 4

MINIMUM LANE CLOSURE TAPER LENGTH = L (feet)										
LANE WIDTH (feet)	Posted Speed (mph)									
	25	30	35	40	45	50	55	60	65	70
10	105	150	205	270	450	500	550	-	-	-
11	115	165	225	295	495	550	605	660	-	-
12	125	180	245	320	540	600	660	720	780	840

MINIMUM SHOULDER TAPER LENGTH = L/3 (feet)										
SHOULDER WIDTH (feet)	Posted Speed (mph)									
	25	30	35	40	45	50	55	60	65	70
8'	40	40	60	90	120	130	150	160	170	190
10'	40	60	90	90	150	170	190	200	220	240
USE A MINIMUM 3 DEVICES TAPER FOR SHOULDER LESS THEN 8'.										

SIGN SPACING = X (1)		
FREEWAYS & EXPRESSWAYS	55 / 70 MPH	1500' ±
RURAL HIGHWAYS	60 / 65 MPH	800' ±
RURAL ROADS	45 / 55 MPH	500' ±
RURAL ROADS & URBAN ARTERIALS	35 / 40 MPH	350' ±
RURAL ROADS & URBAN ARTERIALS RESIDENTIAL & BUSINESS DISTRICTS	25 / 30 MPH	200' ± (2)
URBAN STREETS	25 MPH OR LESS	100' ± (2)

(1) ALL SPACING MAY BE ADJUSTED TO ACCOMMODATE INTERCHANGE RAMPS, AT-GRADE INTERSECTIONS AND DRIVEWAYS.
(2) THIS SPACING MAY BE REDUCED IN URBAN AREAS TO FIT ROADWAY CONDITIONS.

BUFFER DATA										
LONGITUDINAL BUFFER SPACE = B										
	25	30	35	40	45	50	55	60	65	70
LENGTH (feet)	155	200	250	305	360	425	495	570	645	730
BUFFER VEHICLE ROLL AHEAD DISTANCE = R										
TRANSPORTABLE ATTENUATOR MINIMUM HOST VEHICLE WEIGHT 15,000 LBS. THE MAXIMUM WEIGHT SHALL BE IN ACCORDANCE WITH THE MANUFACTURERS RECOMMENDATION.									30 FEET MIN. TO 100 FEET MAX.	

CHANNELIZATION DEVICE SPACING (feet)		
MPH	TAPER	TANGENT
50/70	40	80
35/45	30	60
25/30	20	40

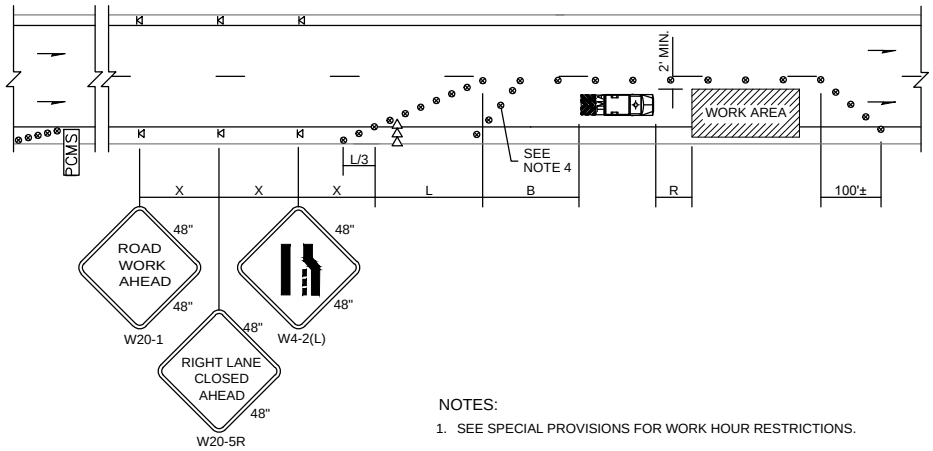

PCMS	
1	2
RIGHT LANE CLOSURE	1 MILE AHEAD
2.0 SEC	2.0 SEC

FIELD LOCATE 1 MILE ± IN ADVANCE OF LANE CLOSURE SIGNING.

LEGEND

- TEMPORARY SIGN LOCATION
- TRAFFIC SAFETY DRUM
- SEQUENTIAL ARROW SIGN
- TRANSPORTABLE ATTENUATOR
- PCMS — PORTABLE CHANGEABLE MESSAGE SIGN

NOTES:

1. SEE SPECIAL PROVISIONS FOR WORK HOUR RESTRICTIONS.
2. EXTEND DEVICE TAPER AT L/3 ACROSS SHOULDER.
3. DEVICES SHALL NOT ENCROACH INTO THE ADJACENT LANE.
4. USE TRANSVERSE DEVICES IN CLOSED LANE EVERY 1000' (FT) (RECOMMENDED).
5. DEVICE SPACING FOR THE DOWNSTREAM TAPER SHALL BE 20' (FT).
6. ALL SIGNS ARE BLACK ON ORANGE.

Preliminary

11/09/2016 1:44:06 PM

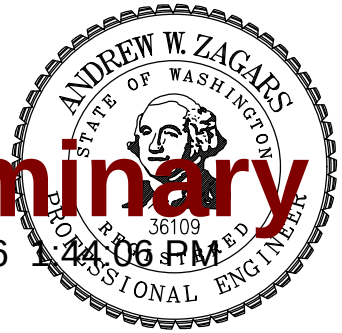

CITY OF SAMMAMISH
DEPARTMENT OF PUBLIC WORKS

SINGLE-LANE CLOSURE FOR MULTI-LANE ROADWAYS

APPROVED BY
CITY ENGINEER _____ DATE _____

REV	DWN	CKD	DATE	FILE
	XXX	XXX	AUG-XX-2015	FIG09-03

REV. NO. X

Exhibit 4

MINIMUM LANE CLOSURE TAPER LENGTH = L (feet)										
LANE WIDTH (feet)	Posted Speed (mph)									
	25	30	35	40	45	50	55	60	65	70
10	105	150	205	270	450	500	550	-	-	-
11	115	165	225	295	495	550	605	660	-	-
12	125	180	245	320	540	600	660	720	780	840

MINIMUM SHOULDER TAPER LENGTH = L/3 (feet)										
SHOULDER WIDTH (feet)	Posted Speed (mph)									
	25	30	35	40	45	50	55	60	65	70
8'	40	40	60	90	120	130	150	160	170	190
10'	40	60	90	90	150	170	190	200	220	240
USE A MINIMUM 3 DEVICES TAPER FOR SHOULDER LESS THEN 8'.										

SIGN SPACING = X (1)		
FREEWAYS & EXPRESSWAYS	55 / 70 MPH	1500' ±
RURAL HIGHWAYS	60 / 65 MPH	800' ±
RURAL ROADS	45 / 55 MPH	500' ±
RURAL ROADS & URBAN ARTERIALS	35 / 40 MPH	350' ±
RURAL ROADS & URBAN ARTERIALS RESIDENTAL & BUSINESS DISTREICTS	25 / 30 MPH	200' ± (2)
URBAN STREETS	25 MPH OR LESS	100' ± (2)

(1) ALL SPACING MAY BE ADJUSTED TO ACCOMMODATE INTERCHANGE RAMPS, AT-GRADE INTERSECTIONS AND DRIVEWAYS.
(2) THIS SPACING MAY BE REDUCED IN URBAN AREAS TO FIT ROADWAY CONDITIONS.

CHANNELIZATION DEVICE SPACING (feet)		
MPH	TAPER	TANGENT
50/70	40	80
35/45	30	60
25/30	20	40

PCMS	
1	2
2 LANES CLOSED AHEAD	WATCH FOR SLOW TRAFFIC
2.0 SEC	2.0 SEC

FIELD LOCATE 1 MILE IN ADVANCE OF LANE CLOSURE SIGNING.

BUFFER DATA										
LONGITUDINAL BUFFER SPACE = B										
SPEED (MPH)	25	30	35	40	45	50	55	60	65	70
LENGTH (feet)	155	200	250	305	360	425	495	570	645	730
BUFFER VEHICLE ROLL AHEAD DISTANCE = R										
TRANSPORTABLE ATTENUATOR MINIMUM HOST VEHICLE WEIGHT 15,000 LBS. THE MAXIMUM WEIGHT SHALL BE IN ACCORDANCE WITH THE MANUFACTURERS RECOMMENDATION.									30 FEET MIN. TO 100 FEET MAX.	

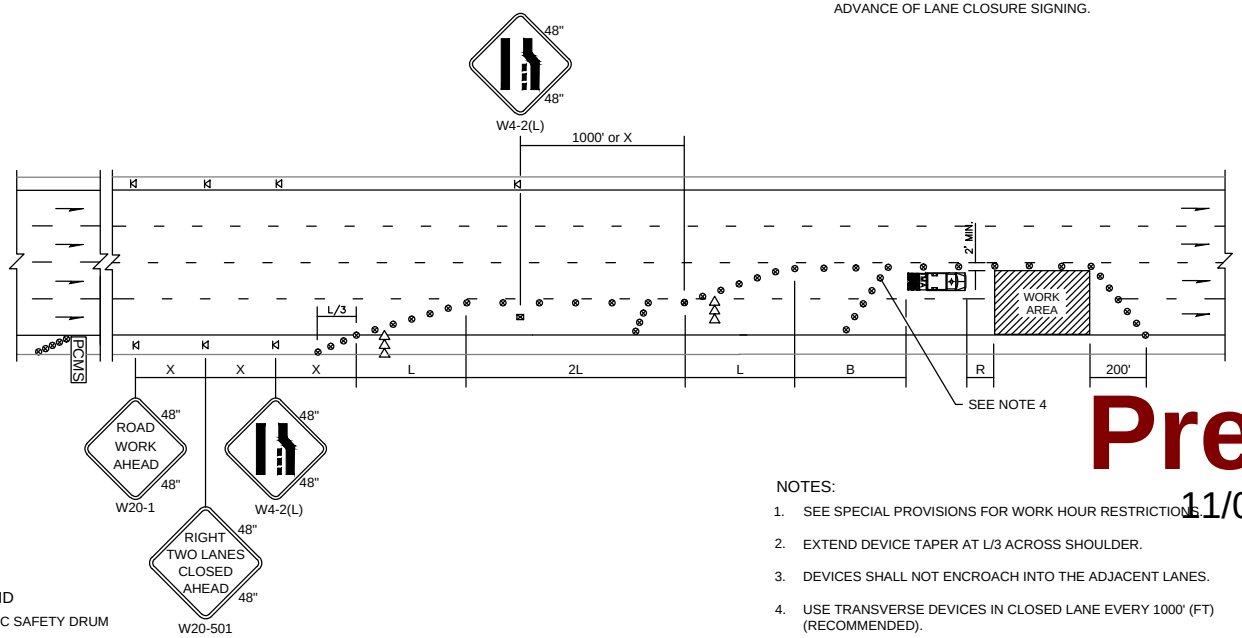

LEGEND

- TRAFFIC SAFETY DRUM
- TEMPORARY SIGN LOCATION
- SEQUENTIAL ARROW SIGN
- TRANSPORTABLE ATTENUATOR
- PCMS — PORTABLE CHANGEABLE MESSAGE SIGN
- TEMPORARY SIGN LOCATION (5' (FT) MOUNTING HEIGHT)

NOTES:

1. SEE SPECIAL PROVISIONS FOR WORK HOUR RESTRICTIONS.
2. EXTEND DEVICE TAPER AT L/3 ACROSS SHOULDER.
3. DEVICES SHALL NOT ENCROACH INTO THE ADJACENT LANES.
4. USE TRANSVERSE DEVICES IN CLOSED LANE EVERY 1000' (FT) (RECOMMENDED).
5. DEVICE SPACING FOR THE DOWNSTREAM TAPER SHALL BE 20' (FT).
6. ALL SIGNS ARE BLACK ON ORANGE.

Preliminary
11/09/2016 1:44:10 PM

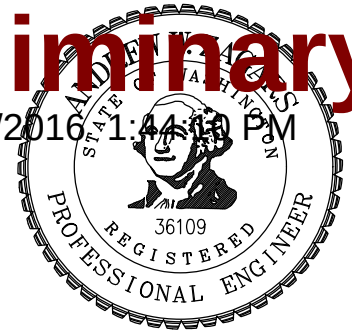

CITY OF SAMMAMISH
DEPARTMENT OF PUBLIC WORKS

DOUBLE-LANE CLOSURE FOR MULTI-LANE ROADWAYS

APPROVED BY
CITY ENGINEER _____ DATE _____

REV	DWN	CKD	DATE	FILE
	XXX	XXX	AUG-XX-2015	FIG09-04

REV. NO. X

Exhibit 4

SIGN SPACING = X (1)		
RURAL ROADS & URBAN ARTERIALS	35 / 40 MPH	350' ±
RURAL ROADS, URBAN ARTERIALS, RESIDENTIAL & BUSINESS DISTRICTS	25 / 30 MPH	200' ± (2)
URBAN STREETS	25 MPH OR LESS	100' ± (2)

(1) ALL SPACING MAY BE ADJUSTED TO ACCOMMODATE INTERSECTIONS AND DRIVEWAYS.
(2) THIS SPACING MAY BE REDUCED IN URBAN AREAS TO FIT ROADWAY CONDITIONS.

MINIMUM SHOULDER TAPER LENGTH = L/3 (feet)										
SHOULDER WIDTH (feet)	Posted Speed (mph)									
	25	30	35	40	45	50	55	60	65	70
8'	40	40	60	90	-	-	-	-	-	-
10'	40	60	90	90	-	-	-	-	-	-
USE A 3 DEVICES TAPER FOR SHOULDERS LESS THEN 8'										

CHANNELIZATION DEVICE SPACING (feet)		
MPH	TAPER	TANGENT
35/40	30	60
25/30	20	40

BUFFER DATA										
LONGITUDINAL BUFFER SPACE = B										
SPEED (MPH)	25	30	35	40	45	50	55	60	65	70
LENGTH (feet)	155	200	250	305						

BUFFER VEHICLE ROLL AHEAD DISTANCE = R	
TRANSPORTABLE ATTENUATOR MINIMUM HOST VEHICLE WEIGHT 15,000 LBS. THE MAXIMUM WEIGHT SHALL BE IN ACCORDANCE WITH THE MANUFACTURERS RECOMMENDATION.	30 FEET MIN. TO 100 FEET MAX.
PROTECTIVE VEHICLE MAY BE A WORK VEHICLE STRATEGICALLY LOCATED TO SHIELD THE WORK AREA.	NO SPECIFIED DISTANCE REQUIRED

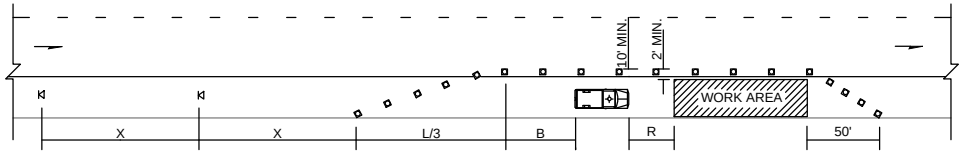

W20-1

W21-5

LEGEND

- TEMPORARY SIGN LOCATION
- CHANNELIZING DEVICES
- PROTECTIVE VEHICLE

NOTES:

1. DEVICE SPACING FOR THE DOWNSTREAM TAPER SHALL BE 20' (FT).
2. ALL SIGNS ARE BLACK ON ORANGE.

Preliminary

11/09/2016 1:44:15 PM

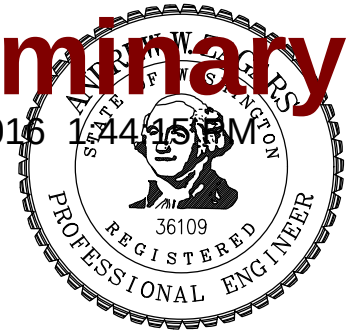

CITY OF SAMMAMISH
DEPARTMENT OF PUBLIC WORKS

SHOULDER CLOSURE – LOW SPEED (40 MPH OR LESS)

APPROVED BY
CITY ENGINEER _____ DATE _____

REV	DWN	CKD	DATE	FILE
	XXX	XXX	AUG-XX-2015	FIG09-05

REV. NO. X

Exhibit 4

SIGN SPACING = X (1)		
RURAL ROADS	45 / 55 MPH	500' ±
RURAL ROADS & URBAN ARTERIALS	35 / 40 MPH	350' ±
RURAL ROADS & URBAN ARTERIALS RESIDENTAL & BUSINESS DISTREICTS	25 / 30 MPH	200' ± (2)
URBAN STREETS	25 MPH OR LESS	100' ± (2)

(1) ALL SPACING MAY BE ADJUSTED TO ACCOMMODATE INTERCHANGE RAMPS, AT-GRADE INTERSECTIONS AND DRIVEWAYS.
(2) THIS SPACING MAY BE REDUCED IN URBAN AREAS TO FIT ROADWAY CONDITIONS.

MINIMUM TAPER LENGTH = L (feet)										
LANE WIDTH (feet)	Posted Speed (mph)									
	25	30	35	40	45	50	55	60	65	70
10	105	150	205	270	450	500	-	-	-	-
11	115	165	225	295	495	550	-	-	-	-
12	125	180	245	320	540	600	-	-	-	-

CHANNELIZATION DEVICE SPACING (feet)		
MPH	TAPER	TANGENT
50	40	80
35/45	30	60
25/30	20	40

BUFFER DATA										
LONGITUDINAL BUFFER SPACE = B										
SPEED (MPH)	25	30	35	40	45	50	55	60	65	70
LENGTH (feet)	155	200	250	305	360	425	-	-	-	-
BUFFER VEHICLE ROLL AHEAD DISTANCE = R										
TRANSPORTABLE ATTENUATOR MINIMUM HOST VEHICLE WEIGHT 15,000 LBS. THE MAXIMUM WEIGHT SHALL BE IN ACCORDANCE WITH THE MANUFACTURERS RECOMMENDATION.										30 FEET MIN. TO 100 FEET MAX.
PROTECTIVE VEHICLE MAY BE A WORK VEHICLE STRATEGICALLY LOCATED TO SHIELD THE WORK AREA.										NO SPECIFIED DISTANCE REQUIRED

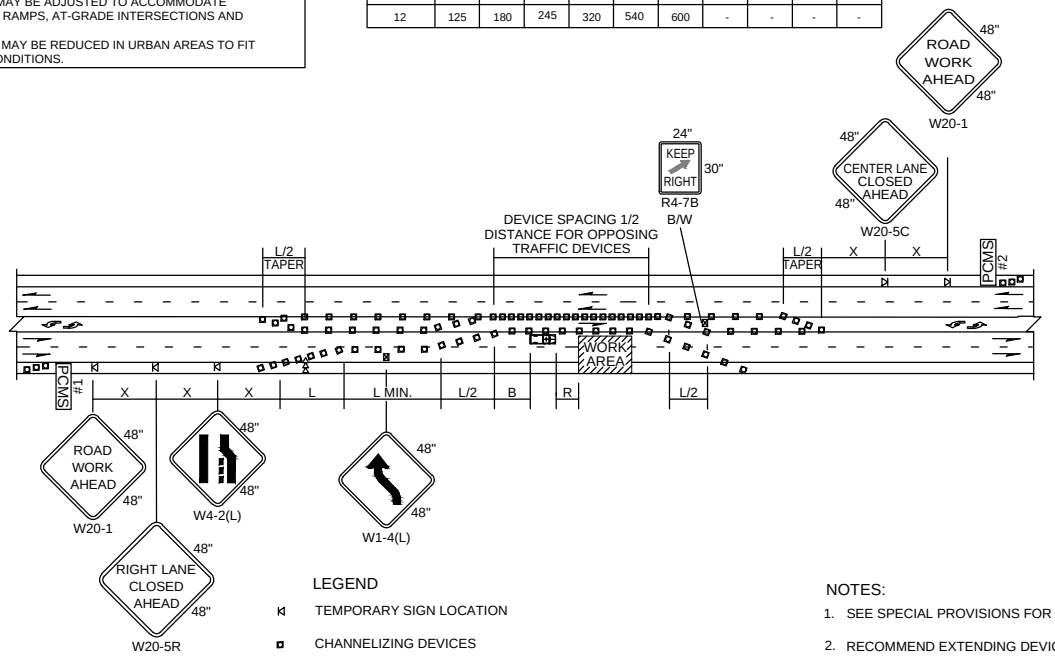

PCMS #1	
1	2
RIGHT LANE CLOSURE	1 MILE AHEAD
2.0 SEC	2.0 SEC

FIELD LOCATE IN ADVANCE OF TEMPORARY SIGNS.

PCMS #2	
1	2
CENTER LANE CLOSED	NNO LEFT TURNING
2.0 SEC	2.0 SEC

FIELD LOCATE IN ADVANCE OF TEMPORARY SIGNS.

LEGEND

- TEMPORARY SIGN LOCATION
- CHANNELIZING DEVICES
- SEQUENTIAL ARROW SIGN
- PROTECTIVE VEHICLE
- PCMS — PORTABLE CHANGEABLE MESSAGE SIGN
- TEMPORARY SIGN LOCATION (5' MOUNTING HEIGHT)

NOTES:

1. SEE SPECIAL PROVISIONS FOR WORK HOUR RESTRICTIONS.
2. RECOMMEND EXTENDING DEVICE TAPER (L/3) ACROSS SHOULDER.
3. FOR POSTED SPEED LIMITS OF 30 MPH OR LESS, USE SIGN W1-3 IN LIEU OF SIGN W1-4.
4. ALL SIGNS ARE BLACK ON ORANGE UNSLESS OTHERWISE DESIGNATED.

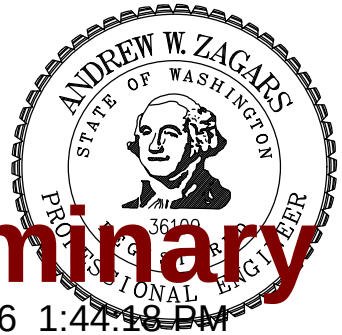

Preliminary

11/09/2016 1:44:18 PM

CITY OF SAMMAMISH
DEPARTMENT OF PUBLIC WORKS

RIGHT LANE CLOSURE WITH SHIFT – 5 LANE ROADWAY

APPROVED BY
CITY ENGINEER _____ DATE _____

REV	DWN	CKD	DATE	FILE
	XXX	XXX	AUG-XX-2015	FIG09-06

REV. NO. X

Exhibit 4

BUFFER DATA										
LONGITUDINAL BUFFER SPACE = B										
SPEED (MPH)	25	30	35	40	45	50	55	60	65	70
LENGTH (feet)	155	200	250	305	360	425	-	-	-	-

BUFFER VEHICLE ROLL AHEAD DISTANCE = R	
TRANSPORTABLE ATTENUATOR MINIMUM HOST VEHICLE WEIGHT 15,000 LBS. THE MAXIMUM WEIGHT SHALL BE IN ACCORDANCE WITH THE MANUFACTURERS RECOMMENDATION.	30 FEET MIN. TO 100 FEET MAX.
PROTECTIVE VEHICLE MAY BE A WORK VEHICLE STRATEGICALLY LOCATED TO SHIELD THE WORK AREA.	NO SPECIFIED DISTANCE REQUIRED

SIGN SPACING = X (1)		
RURAL ROADS	45 / 55 MPH	500' ±
RURAL ROADS & URBAN ARTERIALS	35 / 40 MPH	350' ±
RURAL ROADS & URBAN ARTERIALS RESIDENTAL & BUSINESS DISTREICTS	25 / 30 MPH	200' ± (2)
URBAN STREETS	25 MPH OR LESS	100' ± (2)

(1) ALL SPACING MAY BE ADJUSTED TO ACCOMMODATE INTERCHANGE RAMPS, AT-GRADE INTERSECTIONS AND DRIVEWAYS.
(2) THIS SPACING MAY BE REDUCED IN URBAN AREAS TO FIT ROADWAY CONDITIONS.

MINIMUM TAPER LENGTH = L (feet)										
LANE WIDTH (feet)	Posted Speed (mph)									
	25	30	35	40	45	50	55	60	65	70
10	105	150	205	270	450	500	-	-	-	-
11	115	165	225	295	495	550	-	-	-	-
12	125	180	245	320	540	600	-	-	-	-

CHANNELIZATION DEVICE SPACING (feet)		
MPH	TAPER	TANGENT
50	40	80
35/45	30	60
25/30	20	40

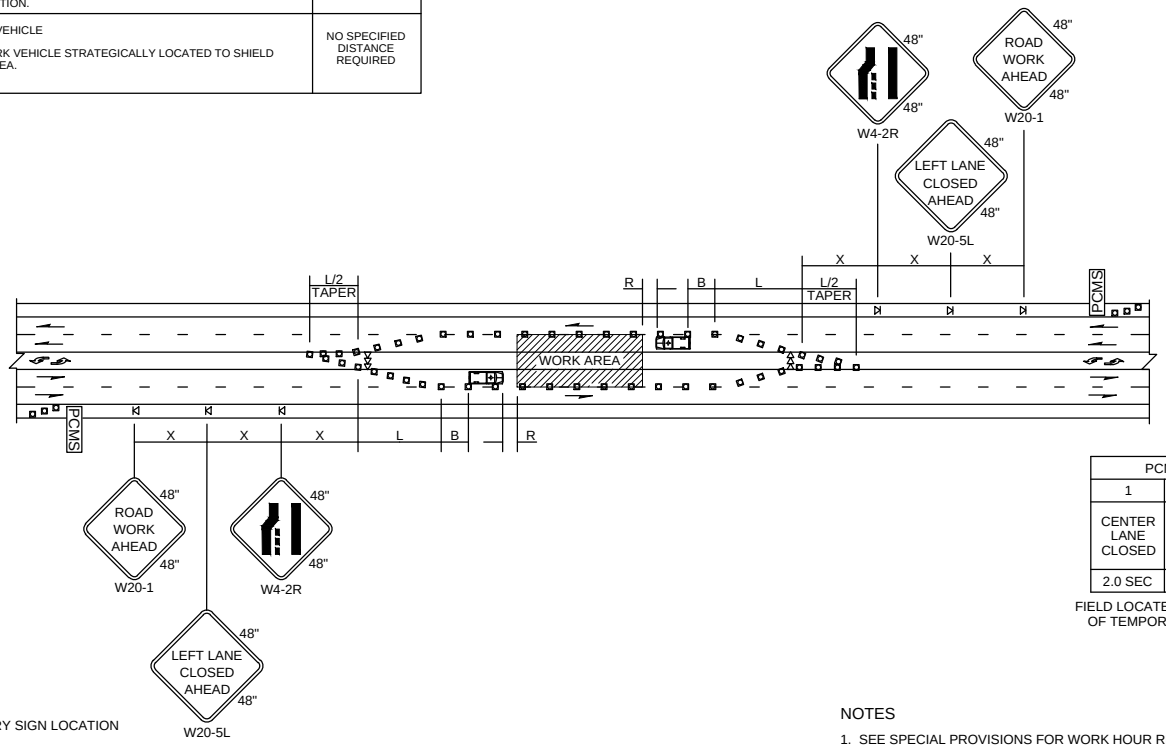

PCMS	
1	2
CENTER LANE CLOSED	NNO LEFT TURNING
2.0 SEC	2.0 SEC

FIELD LOCATE IN ADVANCE OF TEMPORARY SIGNS.

LEGEND

- TEMPORARY SIGN LOCATION
- CHANNELIZING DEVICES
- SEQUENTIAL ARROW SIGN
- PROTECTIVE VEHICLE
- PCMS PORTABLE CHANGEABLE MESSAGE SIGN

NOTES

1. SEE SPECIAL PROVISIONS FOR WORK HOUR RESTRICTIONS.
2. ALL SIGNS ARE BLACK ON ORANGE.

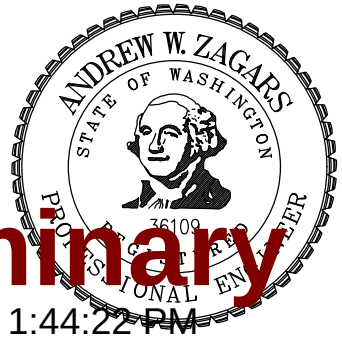

Preliminary

11/09/2016 1:44:22 PM

CITY OF SAMMAMISH
DEPARTMENT OF PUBLIC WORKS

LEFT LANE AND CENTER TURN LANE CLOSURE – 5 LANE ROADWAY

APPROVED BY
CITY ENGINEER _____ DATE _____

REV	DWN	CKD	DATE	FILE
	XXX	XXX	AUG-XX-2015	FIG09-07

REV. NO. X

Exhibit 4

BUFFER DATA										
LONGITUDINAL BUFFER SPACE = B										
SPEED (MPH)	25	30	35	40	45	50	55	60	65	70
LENGTH (feet)	155	200	250	305	360	425	495	570	645	-
BUFFER VEHICLE ROLL AHEAD DISTANCE = R										
TRANSPORTABLE ATTENUATOR MINIMUM HOST VEHICLE WEIGHT 15,000 LBS. THE MAXIMUM WEIGHT SHALL BE IN ACCORDANCE WITH THE MANUFACTURERS RECOMMENDATION.										30 FEET MIN. TO 100 FEET MAX.
PROTECTIVE VEHICLE MAY BE A WORK VEHICLE STRATEGICALLY LOCATED TO SHIELD THE WORK AREA.										NO SPECIFIED DISTANCE REQUIRED

SIGN SPACING = X (1)		
RURAL HIGHWAYS	60 / 65 MPH	800' ±
RURAL ROADS	45 / 55 MPH	500' ±
RURAL ROADS & URBAN ARTERIALS	35 / 40 MPH	350' ±
RURAL ROADS & URBAN ARTERIALS RESIDENTAL & BUSINESS DISTREICTS	25 / 30 MPH	200' ± (2)
URBAN STREETS	25 MPH OR LESS	100' ± (2)

(1) ALL SPACING MAY BE ADJUSTED TO ACCOMMODATE INTERCHANGE RAMPS, AT-GRADE INTERSECTIONS AND DRIVEWAYS.
(2) THIS SPACING MAY BE REDUCED IN URBAN AREAS TO FIT ROADWAY CONDITIONS.

MINIMUM TAPER LENGTH = L (feet)										
LANE WIDTH (feet)	Posted Speed (mph)									
	25	30	35	40	45	50	55	60	65	70
10	105	150	205	270	450	500	550	-	-	-
11	115	165	225	295	495	550	605	660	-	-
12	125	180	245	320	540	600	660	720	780	-

CHANNELIZATION DEVICE SPACING (feet)		
MPH	TAPER	TANGENT
50/60	40	80
35/45	30	60
25/30	20	40

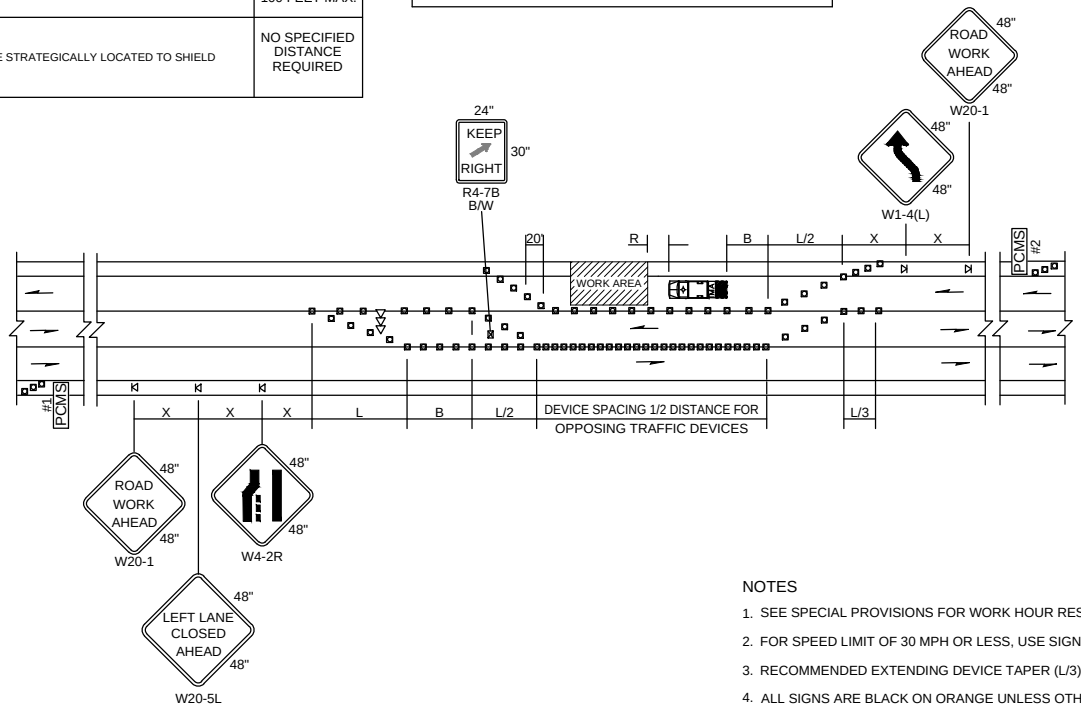

PCMS #1	
1	2
LEFT LANE CLOSURE	1 MILE AHEAD
2.0 SEC	2.0 SEC

FIELD LOCATE IN ADVANCE OF TEMPORARY SIGNS.

PCMS #2	
1	2
LANE SHIFTS LEFT	1 MILE AHEAD
2.0 SEC	2.0 SEC

FIELD LOCATE IN ADVANCE OF TEMPORARY SIGNS.

NOTES

1. SEE SPECIAL PROVISIONS FOR WORK HOUR RESTRICTIONS.
2. FOR SPEED LIMIT OF 30 MPH OR LESS, USE SIGN W1-3 IN LIEU OF SIGN W1-4.
3. RECOMMENDED EXTENDING DEVICE TAPER (L/3) ACROSS SHOULDER.
4. ALL SIGNS ARE BLACK ON ORANGE UNLESS OTHERWISE DESIGNATED.

LEGEND

- TEMPORARY SIGN LOCATION
- CHANNELIZING DEVICES
- SEQUENTIAL ARROW SIGN
- TRANSPORTABLE ATTENUATOR
- PCMS — PORTABLE CHANGEABLE MESSAGE SIGN
- TEMPORARY SIGN LOCATION (5' MOUNTING HEIGHT)

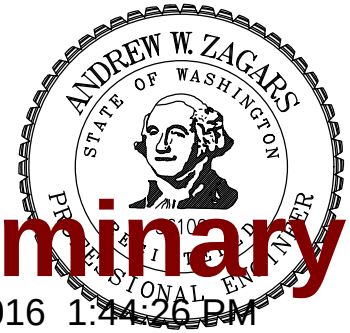

Preliminary

11/09/2016 1:44:26 PM

CITY OF SAMMAMISH
DEPARTMENT OF PUBLIC WORKS

LANE SHIFT –
THREE LANE ROADWAY

APPROVED BY
CITY ENGINEER _____ DATE _____

REV	DWN	CKD	DATE	FILE
	XXX	XXX	AUG-XX-2015	FIG09-08

REV. NO. X

Exhibit 4

SIGN SPACING = X (1)		
FREEWAYS & EXPRESSWAYS	55 / 70 MPH	1500' ±
RURAL HIGHWAYS	60 / 65 MPH	800' ±
RURAL ROADS	45 / 55 MPH	500' ±
RURAL ROADS & URBAN ARTERIALS	35 / 40 MPH	350' ±
RURAL ROADS & URBAN ARTERIALS RESIDENTAL & BUSINESS DISTREICTS	25 / 30 MPH	200' ± (2)
URBAN STREETS	25 MPH OR LESS	100' ± (2)

(1) ALL SPACING MAY BE ADJUSTED TO ACCOMMODATE INTERCHANGE RAMPS, AT-GRADE INTERSECTIONS AND DRIVEWAYS.
(2) THIS SPACING MAY BE REDUCED IN URBAN AREAS TO FIT ROADWAY CONDITIONS.

MINIMUM SHOULDER TAPER LENGTH = L/3 (feet)										
SHOULDER WIDTH (feet)	Posted Speed (mph)									
	25	30	35	40	45	50	55	60	65	70
8'	40	40	60	90	120	130	150	160	170	190
10'	40	60	90	90	150	170	190	200	220	240
USE A MINIMUM 3 DEVICES TAPER FOR SHOULDER LESS THEN 8'.										

CHANNELIZATION DEVICE SPACING (feet)		
MPH	TAPER	TANGENT
50/70	40	80
35/45	30	60
25/30	20	40

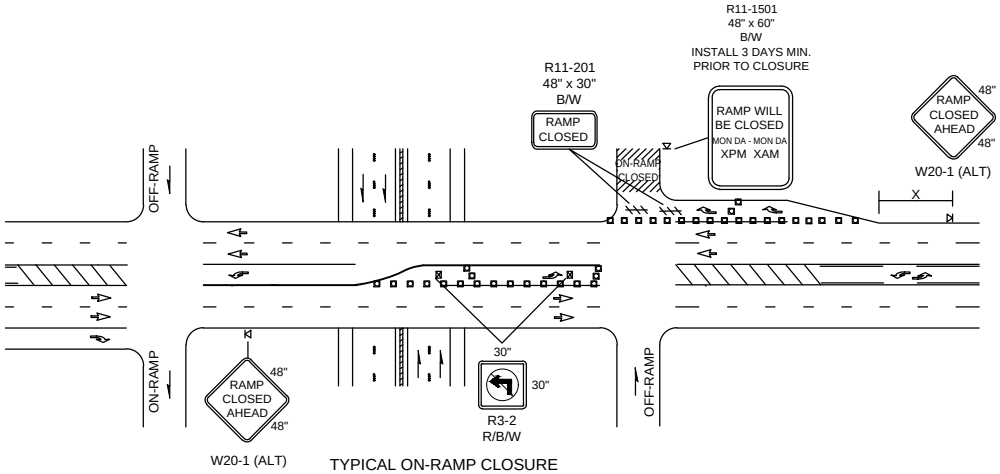

TYPICAL ON-RAMP CLOSURE

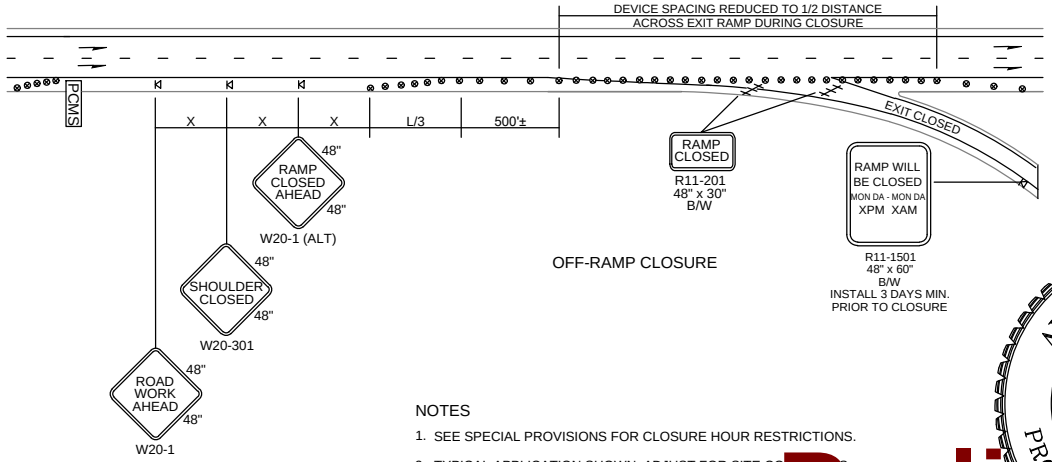

OFF-RAMP CLOSURE

PCMS	
1	2
EXIT XXX CLOSED	USE EXIT XXX
2.0 SEC	2.0 SEC

FIELD LOCATE

LEGEND

- TYPE 3 BARRICADE
- TEMPORARY SIGN LOCATION
- CHANNELIZING DEVICES
- TRAFFIC SAFETY DRUM
- PCMS — PORTABLE CHANGEABLE MESSAGE SIGN
- TEMPORARY SIGN LOCATION (5' MOUNTING HEIGHT)

NOTES

1. SEE SPECIAL PROVISIONS FOR CLOSURE HOUR RESTRICTIONS.
2. TYPICAL APPLICATION SHOWN. ADJUST FOR SITE CONDITIONS.
3. ALL SIGNS ARE BLACK ON ORANGE UNLESS OTHERWISE DESIGNATED.

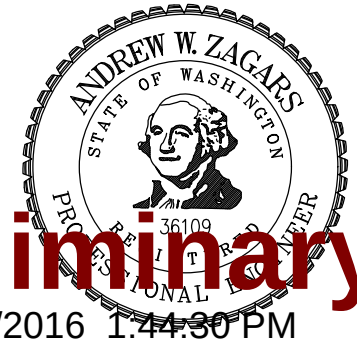

Preliminary

11/09/2016 1:44:30 PM

CITY OF SAMMAMISH
DEPARTMENT OF PUBLIC WORKS

SHORT TERM RAMP CLOSURES

APPROVED BY
CITY ENGINEER _____ DATE _____

REV	DWN	CKD	DATE	FILE
	XXX	XXX	AUG-XX-2015	FIG09-09

REV. NO. X

Exhibit 4

BUFFER DATA										
LONGITUDINAL BUFFER SPACE = B										
SPEED (MPH)	25	30	35	40	45	50	55	60	65	70
LENGTH (feet)	155	200	250	305	360	425	495	570	645	-

BUFFER VEHICLE ROLL AHEAD DISTANCE = R	
TRANSPORTABLE ATTENUATOR MINIMUM HOST VEHICLE WEIGHT 15,000 LBS. THE MAXIMUM WEIGHT SHALL BE IN ACCORDANCE WITH THE MANUFACTURERS RECOMMENDATION.	30 FEET MIN. TO 100 FEET MAX.
PROTECTIVE VEHICLE MAY BE A WORK VEHICLE STRATEGICALLY LOCATED TO SHIELD THE WORK AREA.	NO SPECIFIED DISTANCE REQUIRED

MINIMUM TAPER LENGTH = L (feet)										
LANE WIDTH (feet)	Posted Speed (mph)									
	25	30	35	40	45	50	55	60	65	70
10	105	150	205	270	450	500	550	-	-	-
11	115	165	225	295	495	550	605	660	-	-
12	125	180	245	320	540	600	660	720	-	-

SIGN SPACING = X (1)		
RURAL HIGHWAYS	60 / 65 MPH	800' ±
RURAL ROADS	45 / 55 MPH	500' ±
RURAL ROADS & URBAN ARTERIALS	35 / 40 MPH	350' ±
RURAL ROADS & URBAN ARTERIALS RESIDENTAL & BUSINESS DISTRICTS	25 / 30 MPH	200' ± (2)
URBAN STREETS	25 MPH OR LESS	100' ± (2)

(1) ALL SPACING MAY BE ADJUSTED TO ACCOMMODATE INTERCHANGE RAMPS, AT-GRADE INTERSECTIONS AND DRIVEWAYS.
(2) THIS SPACING MAY BE REDUCED IN URBAN AREAS TO FIT ROADWAY CONDITIONS.

CHANNELIZATION DEVICE SPACING (feet)		
MPH	TAPER	TANGENT
50/70	40	80
35/45	30	60
25/30	20	40

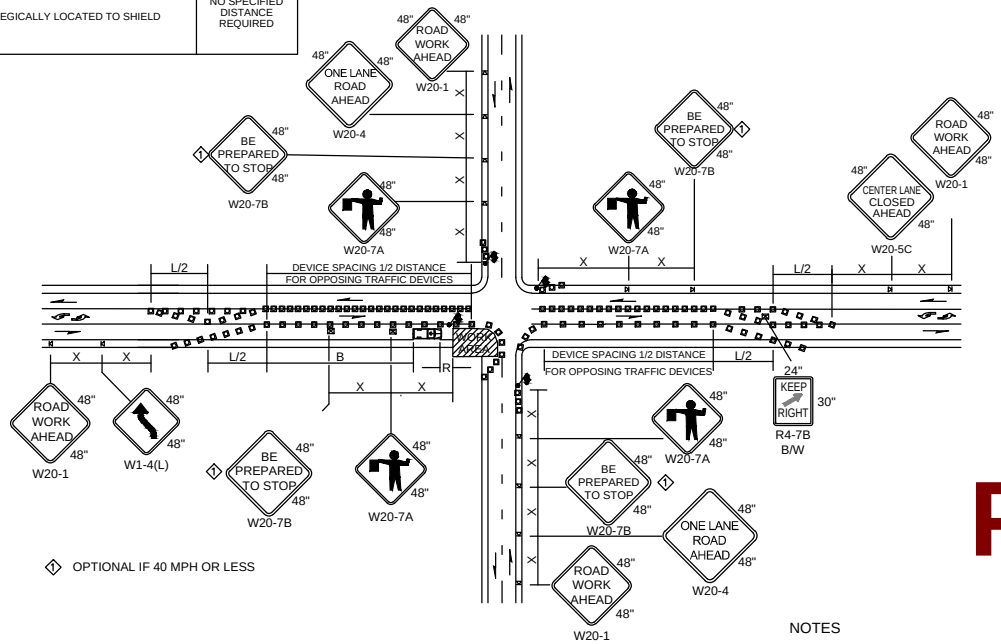

LEGEND

- FLAGGING STATION
- TEMPORARY SIGN LOCATION
- CHANNELIZING DEVICES
- PROTECTIVE VEHICLE - RECOMMENDED
- TEMPORARY SIGN LOCATION (5' MOUNTING HEIGHT)

NOTES

1. RECOMMEND EXTENDING DEVICE TAPER (L/3) ACROSS SHOULDER.
2. IF A SIGNAL IS PRESENT, IT SHALL BE SET TO "RED FLASH MODE" OR TURNED OFF DURING FLAGGING OPERATIONS.
3. FOR SPEED LIMIT OF 30 MPH OR LESS USE SIGN W1-3 IN LIEU OF SIGN W1-4.
4. MAINTAIN A MINIMUM OF ONE ACCESS POINT FOR EACH BUSINESS WITHIN WORK AREA LIMITS.
5. ALL SIGNS ARE BLACK ON ORANGE UNLESS OTHERWISE DESIGNATED.

Preliminary

11/09/2016 11:44:35 PM

CITY OF SAMMAMISH
DEPARTMENT OF PUBLIC WORKS

INTERSECTION LANE CLOSURE – THREE LANE ROADWAY

APPROVED BY
CITY ENGINEER _____ DATE _____

REV	DWN	CKD	DATE	FILE
	XXX	XXX	AUG-XX-2015	FIG09-10

REV. NO. X

Exhibit 4

CHANNELIZATION DEVICE SPACING (feet)		
MPH	TAPER	TANGENT
50/70	40	80
35/45	30	60
25/30	20	40

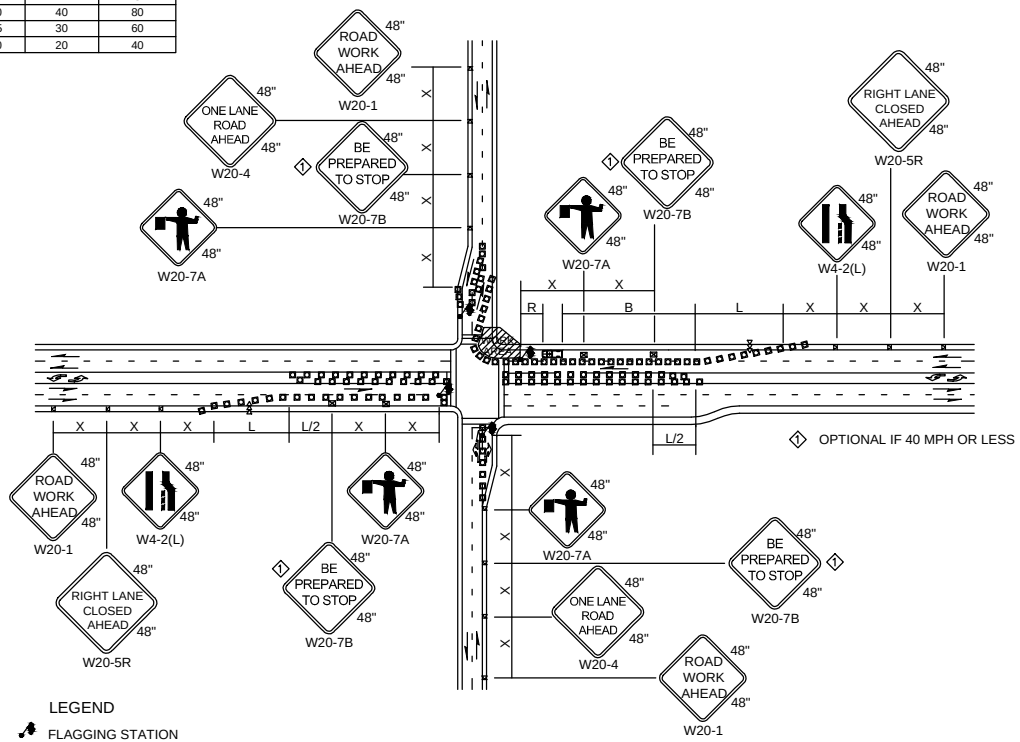

BUFFER DATA										
LONGITUDINAL BUFFER SPACE = B										
SPEED (MPH)	25	30	35	40	45	50	55	60	65	70
LENGTH (feet)	155	200	250	305	360	425	495	570	645	-

BUFFER VEHICLE ROLL AHEAD DISTANCE = R	
TRANSPORTABLE ATTENUATOR MINIMUM HOST VEHICLE WEIGHT 15,000 LBS. THE MAXIMUM WEIGHT SHALL BE IN ACCORDANCE WITH THE MANUFACTURERS RECOMMENDATION.	30 FEET MIN. TO 100 FEET MAX.
PROTECTIVE VEHICLE MAY BE A WORK VEHICLE STRATEGICALLY LOCATED TO SHIELD THE WORK AREA.	NO SPECIFIED DISTANCE REQUIRED

MINIMUM TAPER LENGTH = L (feet)										
LANE WIDTH (feet)	Posted Speed (mph)									
	25	30	35	40	45	50	55	60	65	70
10	105	150	205	270	450	500	550	-	-	-
11	115	165	225	295	495	550	605	660	-	-
12	125	180	245	320	540	600	660	720	-	-

SIGN SPACING = X (1)		
RURAL HIGHWAYS	60 / 65 MPH	800' ±
RURAL ROADS	45 / 55 MPH	500' ±
RURAL ROADS & URBAN ARTERIALS	35 / 40 MPH	350' ±
RURAL ROADS & URBAN ARTERIALS RESIDENTAL & BUSINESS DISTREICTS	25 / 30 MPH	200' ± (2)
URBAN STREETS	25 MPH OR LESS	100' ± (2)

(1) ALL SPACING MAY BE ADJUSTED TO ACCOMMODATE INTERCHANGE RAMPS, AT-GRADE INTERSECTIONS AND DRIVEWAYS.
(2) THIS SPACING MAY BE REDUCED IN URBAN AREAS TO FIT ROADWAY CONDITIONS.

LEGEND

- FLAGGING STATION
- TEMPORARY SIGN LOCATION
- CHANNELIZING DEVICES
- SEQUENTIAL ARROW SIGN
- PROTECTIVE VEHICLE - RECOMMENDED
- TEMPORARY SIGN LOCATION (5' MOUNTING HEIGHT)

NOTES

1. RECOMMEND EXTENDING DEVICE TAPER (L/3) ACROSS SHOULDER.
2. IF A SIGNAL IS PRESENT, IT SHALL BE SET TO "RED FLASH MODE" OR TURNED OFF DURING FLAGGING OPERATIONS.
3. MAINTAIN A MINIMUM OF ONE ACCESS POINT FOR EACH BUSINESS WITHIN WORK AREA LIMITS.
4. ALL SIGNS ARE BLACK ON ORANGE.

Preliminary

11/09/2015 1:44:40 PM

CITY OF SAMMAMISH
DEPARTMENT OF PUBLIC WORKS

INTERSECTION LANE CLOSURE – FIVE LANE ROADWAY

APPROVED BY
CITY ENGINEER _____ DATE _____

REV	DWN	CKD	DATE	FILE
	XXX	XXX	AUG-XX-2015	FIG09-11

REV. NO. X

Exhibit 4

NO PARKING

R8-3 R/W INSTALL ON TYPE 2 BARRICADES THROUGHOUT THE WORK AREA 24 HOURS PRIOR TO IMPLEMENTING TRAFFIC CONTROL. PRIOR NOTIFICATION OF LOCAL LAW ENFORCEMENT REQUIRED.

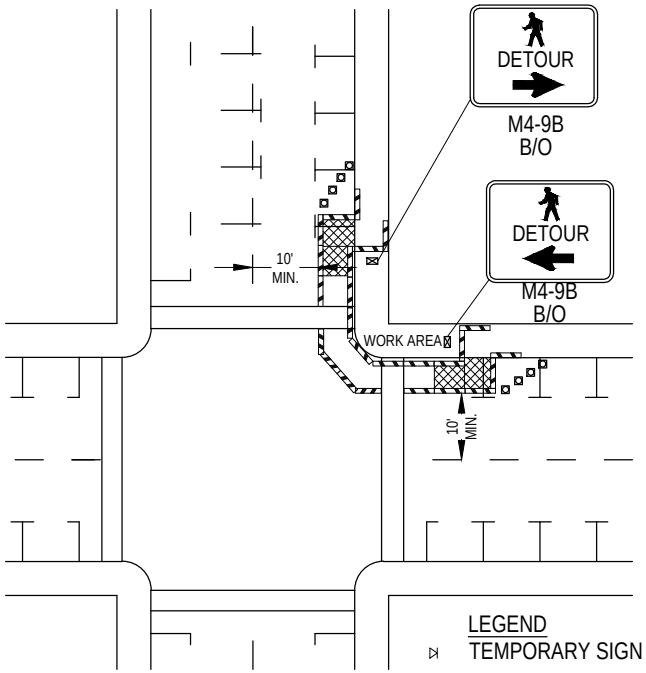

SIDEWALK DIVERSION

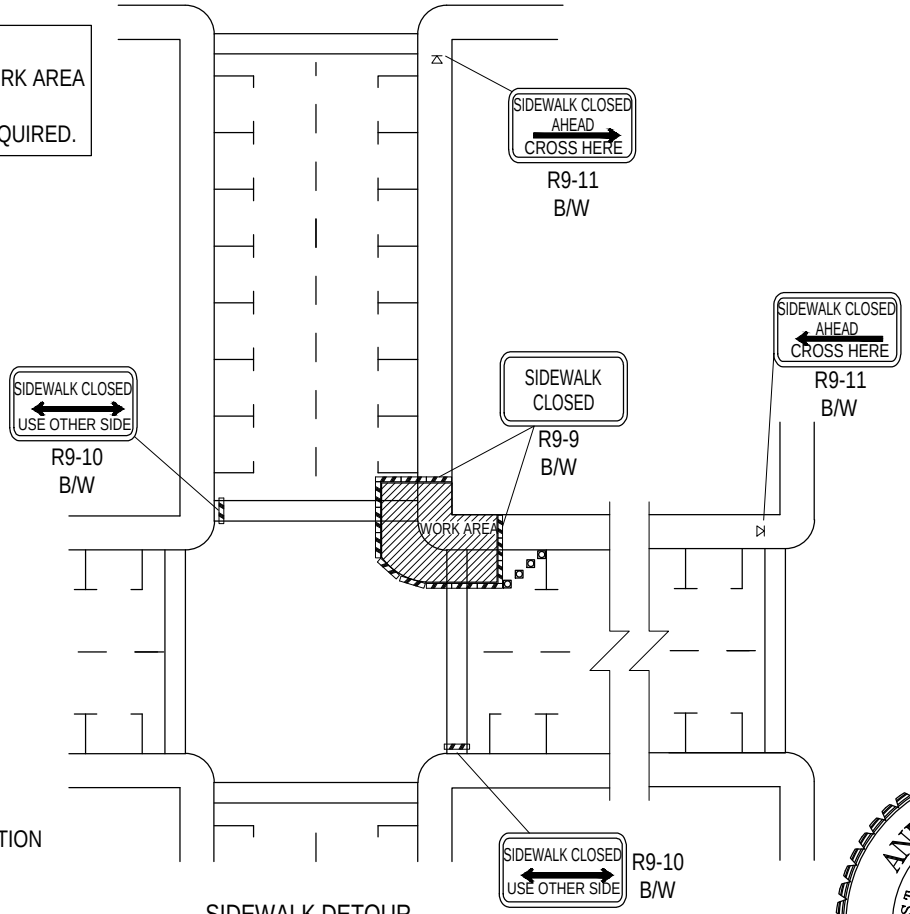

SIDEWALK DETOUR

LEGEND

- TEMPORARY SIGN LOCATION
- CHANNELIZING DEVICES
- PEDESTRIAN CHANNELIZING DEVICES
- TEMPORARY PEDESTRIAN RAMP FOR SIDEWALKS

Preliminary

11/09/2016 1:44:43 PM

NOTES:

1. CONTROLS SHOWN ARE FOR PEDESTRIAN TRAFFIC ONLY.
2. A 60" PEDESTRIAN PATH WIDTH SHOULD BE MAINTAINED (48" IS THE MINIMUM).
3. CONTACT AND COORDINATE IMPACTED TRANSIT AGENCIES PRIOR TO IMPLEMENTING ANY CLOSURES.
4. SEE STD DWG 9-13 FOR TEMPORARY PEDESTRIAN RAMP DETAILS.
5. ADA PEDESTRIAN FACILITIES MUST BE MAINTAINED, SEE WSDOT STD SPECIFICATION 1-10.2(1)B.
6. TEMPORARY PEDESTRIAN PUSH BUTTONS SHALL BE PLACED ON THE DIVERTED PATH WHEN EXISTING BUTTONS ARE NOT ACCESSIBLE TO PEDESTRIANS.

CITY OF SAMMAMISH
DEPARTMENT OF PUBLIC WORKS

INTERSECTION PEDESTRIAN TRAFFIC CONTROL

APPROVED BY
CITY ENGINEER _____ DATE _____

REV	DWN	CKD	DATE	FILE
	XXX	XXX	AUG-XX-2015	FIG09-12

REV. NO. X

Exhibit 4

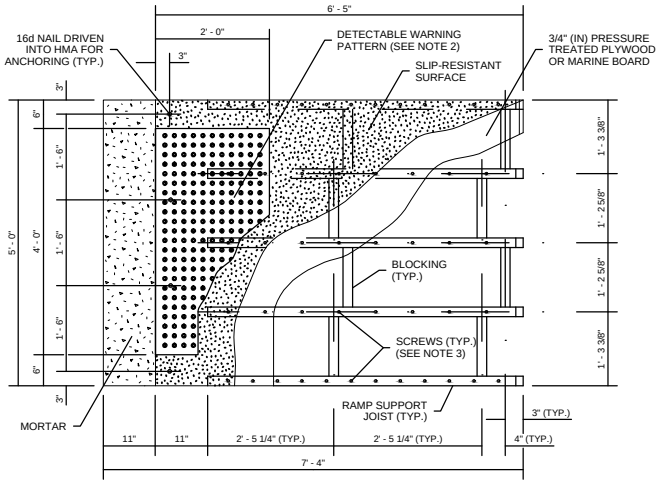

TOP VIEW

RAMP DETAIL

NOTES

1. THIS DESIGN ASSUMES OPTIMAL CONDITIONS AND A STANDARD CURB HEIGHT OF 6" (IN). INSTALLED RAMPS SHALL BE NO STEEPER THAN 12H : 1V, AND SHALL HAVE A CROSS-SLOPE OF 2% OR LESS. USE SHIMS OR GROUT AS REQUIRED TO ADJUST FOR EXISTING CONDITIONS AND TO PREVENT ROCKING. SHIMS SHALL BE NO HIGHER THAN 1" (IN), AND SHALL BE SECURED TO THE RAMP. FOR CURBS SHORTER THAN 6" (IN), INSTALL A RAMP ON THE SIDEWALK, NO STEEPER THAN 12H : 1V, MADE OF GROUT OR AS APPROVED BY THE ENGINEER. ADJUSTMENTS TO THE RAMP DIMENSIONS SHOWN MAY BE REQUIRED TO MATCH EXISTING CONDITIONS.
2. THE DETECTABLE WARNING PATTERN SHALL BE INSTALLED ONLY WHEN THE INTENT IS TO GUIDE PEDESTRIANS DIRECTLY ACROSS THE ROADWAY (CROSSWALK). SEE WSDOT STD PLAN F-40.10 FOR DETAILS.
3. SCREWS SHALL BE USED TO SECURE THE RAMP SURFACE. SPACING SHALL BE IN ACCORDANCE WITH THE CURRENT BUILDING CODE.
4. USE A SLIP-RESISTANT TREATMENT FOR THE SURFACE OF RAMP.
5. ALL FASTENERS SHALL BE GALVANIZED.
6. DO NOT INSTALL A HAND RAILING IF USING THE EDGE BOARD OPTION.
7. RAMP AND RAMP LANDING SHALL NOT EXTEND INTO AN OPEN BIKE LANE OR TRAVEL LANE.

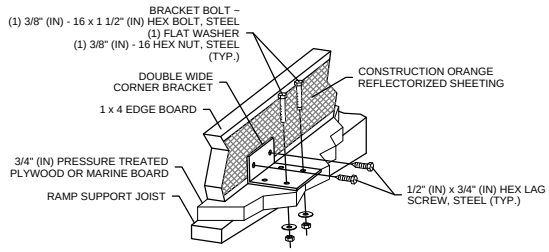

PERSPECTIVE VIEW

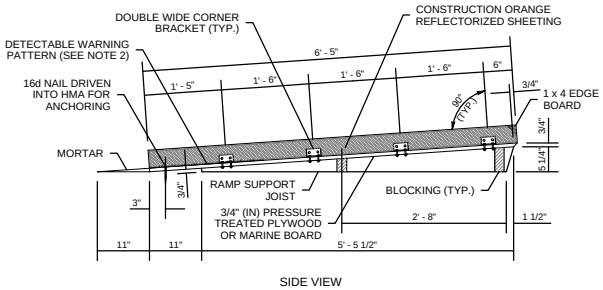

SIDE VIEW

RAMP AND EDGE BOARD

DETAIL (A)

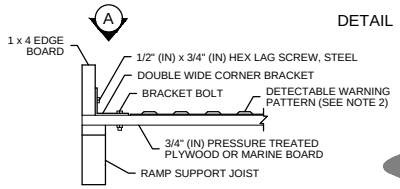

END VIEW

EDGE BOARD ATTACHMENT DETAIL

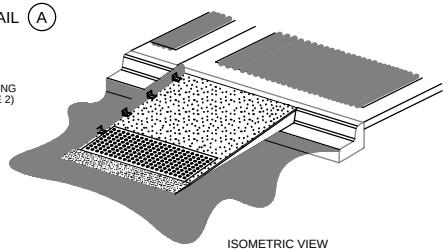

ISOMETRIC VIEW

Preliminary

11/09/2016 1:44:47 PM

CITY OF SAMMAMISH
DEPARTMENT OF PUBLIC WORKS

TEMPORARY PEDESTRIAN RAMP

APPROVED BY
CITY ENGINEER _____ DATE _____

REV	DWN	CKD	DATE	FILE
	XXX	XXX	AUG-XX-2015	FIG09-13

REV. NO. X

Exhibit 4

BUFFER DATA										
LONGITUDINAL BUFFER SPACE = B										
SPEED (MPH)	25	30	35	40	45	50	55	60	65	70
LENGTH (feet)	155	200	250	305	360	425	495	570	645	730
BUFFER VEHICLE ROLL AHEAD DISTANCE = R										
TRANSPORTABLE ATTENUATOR MINIMUM HOST VEHICLE WEIGHT 15,000 LBS. THE MAXIMUM WEIGHT SHALL BE IN ACCORDANCE WITH THE MANUFACTURERS RECOMMENDATION.									30 FEET MIN. TO 100 FEET MAX.	

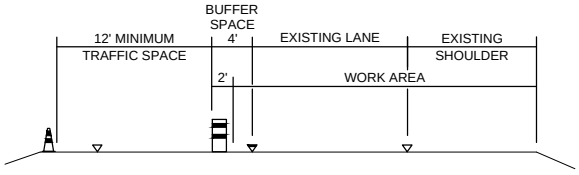

TYPICAL SECTION A-A

SIGN SPACING = X (1)		
FREEWAYS & EXPRESSWAYS	55 / 70 MPH	1500' ±
RURAL HIGHWAYS	60 / 65 MPH	800' ±
RURAL ROADS	45 / 55 MPH	500' ±
RURAL ROADS & URBAN ARTERIALS	35 / 40 MPH	350' ±
RURAL ROADS & URBAN ARTERIALS RESIDENTAL & BUSINESS DISTRICTS	25 / 30 MPH	200' ± (2)
URBAN STREETS	25 MPH OR LESS	100' ± (2)

(1) ALL SPACING MAY BE ADJUSTED TO ACCOMMODATE INTERCHANGE RAMPS, AT-GRADE INTERSECTIONS AND DRIVEWAYS.
(2) THIS SPACING MAY BE REDUCED IN URBAN AREAS TO FIT ROADWAY CONDITIONS.

MINIMUM LANE CLOSURE TAPER LENGTH = L (feet)										
LANE WIDTH (feet)	Posted Speed (mph)									
	25	30	35	40	45	50	55	60	65	70
10	105	150	205	270	450	500	550	-	-	-
11	115	165	225	295	495	550	605	660	-	-
12	125	180	245	320	540	600	660	720	780	840

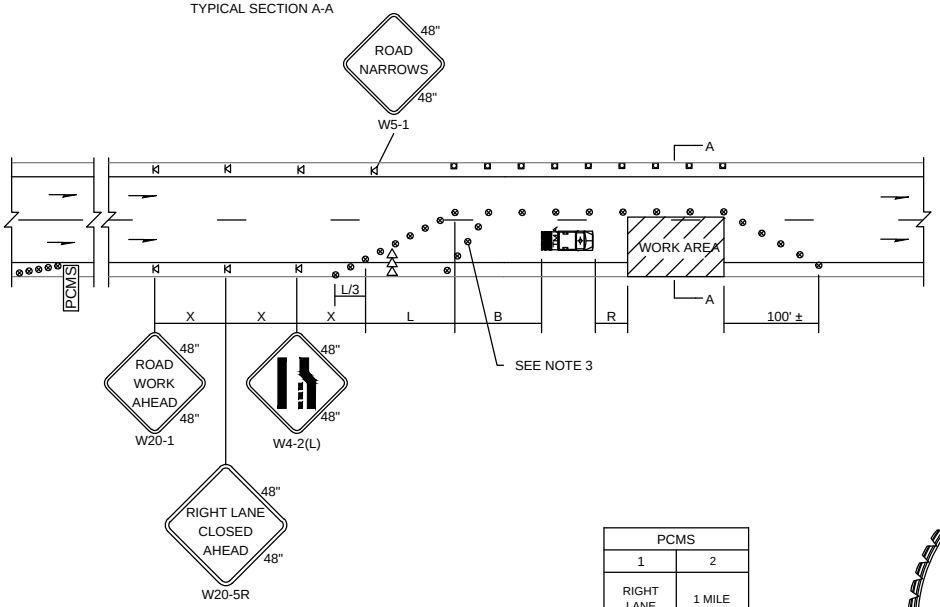

MINIMUM SHOULDER TAPER LENGTH = L/3 (feet)										
SHOULDER WIDTH (feet)	Posted Speed (mph)									
	25	30	35	40	45	50	55	60	65	70
8'	40	40	60	90	120	130	150	160	170	190
10'	40	60	90	90	150	170	190	200	220	240
USE A MINIMUM 3 DEVICES TAPER FOR SHOULDER LESS THEN 8'.										

CHANNELIZATION DEVICE SPACING (feet)		
MPH	TAPER	TANGENT
50/70	40	80
35/45	30	60
25/30	20	40

PCMS	
1	2
RIGHT LANE CLOSURE	1 MILE AHEAD
2.0 SEC	2.0 SEC

FIELD LOCATE 1 MILE ± IN ADVANCE OF LANE CLOSURE SIGNING.

LEGEND

- TEMPORARY SIGN LOCATION
- CHANNELIZING DEVICES
- TRAFFIC SAFETY DRUM
- SEQUENTIAL ARROW SIGN
- TRANSPORTABLE ATTENUATOR
- PCMS — PORTABLE CHANGEABLE MESSAGE SIGN

NOTES

1. SEE SPECIAL PROVISIONS FOR WORK HOUR RESTRICTIONS.
2. RECOMMEND EXTENDING DEVICE TAPER (L/3) ACROSS SHOULDER.
3. USE TRANSVERSE DEVICES IN CLOSED LANE EVERY 1000' (RECOMMENDED).
4. ALL SIGNS ARE BLACK ON ORANGE.
5. RECOMMEND ADVANCE NOTICE FOR ANY OVER WIDTH LOADS PRIOR TO LANE CLOSURE FOR ALTERNATE ROUTES IF APPLICABLE.

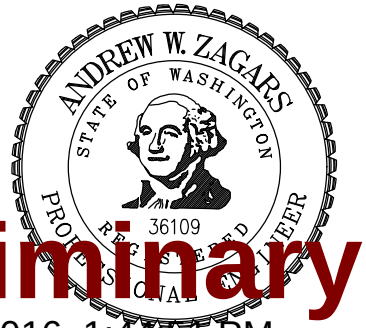

Preliminary

11/09/2016 1:44:51 PM

CITY OF SAMMAMISH
DEPARTMENT OF PUBLIC WORKS

SINGLE-LANE CLOSURE WITH SHIFT

APPROVED BY
CITY ENGINEER _____ DATE _____

REV	DWN	CKD	DATE	FILE
	XXX	XXX	AUG-XX-2015	FIG09-14

REV. NO. X

Exhibit 4

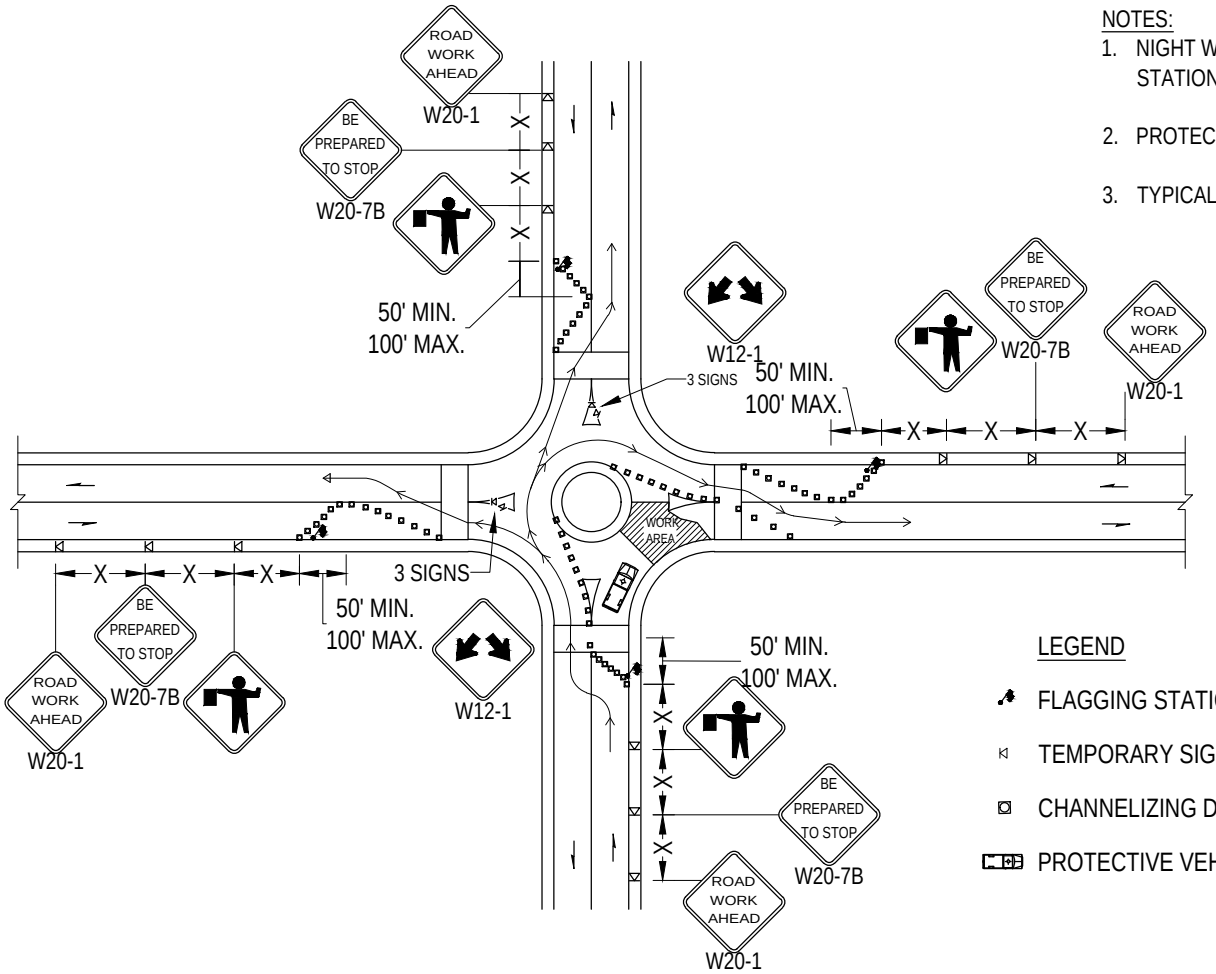

NOTES:

1. NIGHT WORK REQUIRES ADDITIONAL ROADWAY LIGHTING AT FLAGGING STATIONS, SEE THE WSDOT STD SPECIFICATIONS FOR ADDITIONAL DETAILS.
2. PROTECTIVE VEHICLE RECOMMENDED - MAY BE A WORK VEHICLE.
3. TYPICAL APPLICATION SHOWN, ADJUST FOR SITE CONDITIONS.

CHANNELIZATION DEVICE SPACING (feet)		
MPH	TAPER	TANGENT
35/ 45	30	60
25/ 30	20	40

LEGEND

- FLAGGING STATION
- TEMPORARY SIGN LOCATION
- CHANNELIZING DEVICES
- PROTECTIVE VEHICLE - RECOMMENDED

SIGN SPACING = X (1)		
RURAL ROADS & URBAN ARTERIALS	35/ 40 MPH	350'±
RURAL ROADS, URBAN ARTERIALS, RESIDENTIAL & BUSINESS DISTRICTS	25/ 30 MPH	200'± (2)
URBAN STREETS	25 MPH OR LESS	100'± (2)
(1) ALL SPACING MAY BE ADJUSTED TO ACCOMMODATE INTERSECTIONS AND DRIVEWAYS. (2) THIS SPACING MAY BE REDUCED IN URBAN AREAS TO FIT ROADWAY CONDITIONS.		

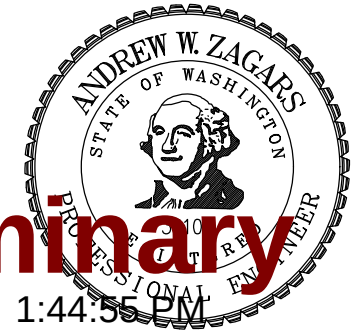

Preliminary

11/09/2016 1:44:55 PM

CITY OF SAMMAMISH
DEPARTMENT OF PUBLIC WORKS

TYPICAL ROUNDABOUT
FLAGGING OPERATION

APPROVED BY
CITY ENGINEER _____ DATE _____

REV	DWN	CKD	DATE	FILE
	XXX	XXX	AUG-XX-2015	FIG09-15

REV. NO. X

Exhibit 4

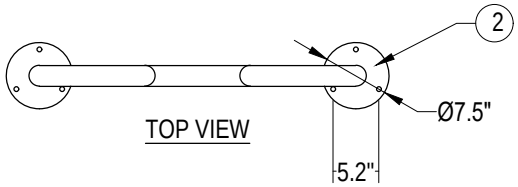

TOP VIEW

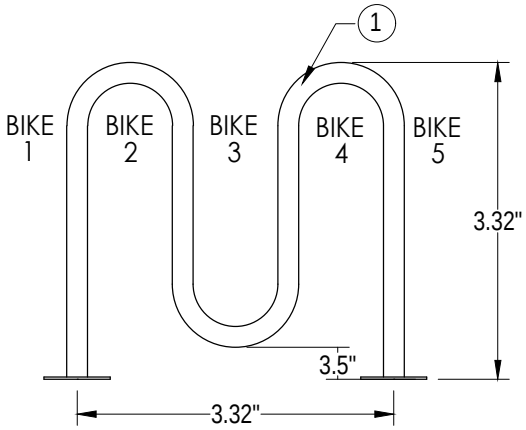

FRONT VIEW

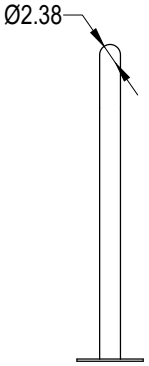

RIGHT SIDE VIEW

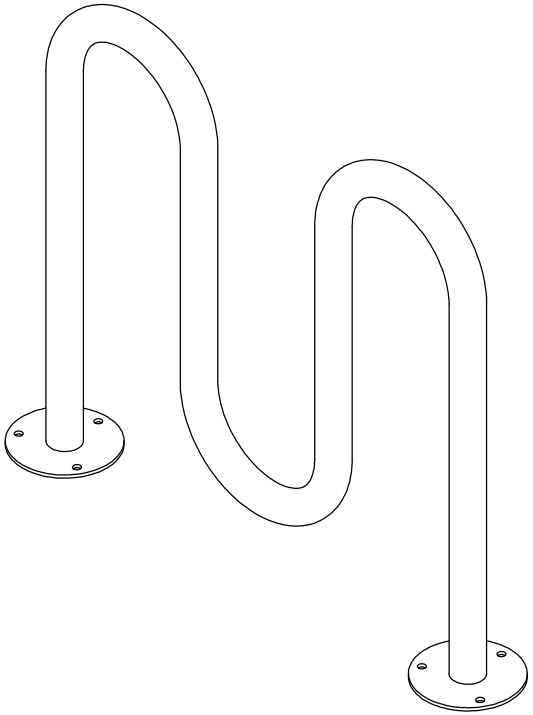

MATERIALS LIST:

1. TUBING - Ø 2 3/8" x 0.154" WALL STEEL TUBING
2. SURFACE PLAT - Ø 7 1/2" x 1/4" THICK STEEL PLATE WITH THREE Ø 9/16" MOUNTING HOLES
3. MOUNTED WITH SIX Ø 1/2" x 4-5" STAINLESS STEEL ANCHOR BOLTS

Preliminary

11/09/2016 1:44:59 PM

CITY OF SAMMAMISH DEPARTMENT OF PUBLIC WORKS			
BIKE RACK			
APPROVED BY CITY ENGINEER _____ DATE _____			
REV	DWN XXX	CKD XXX	DATE AUG-XX-2015	FILE FIG09-16

REV. NO. X

Exhibit 4

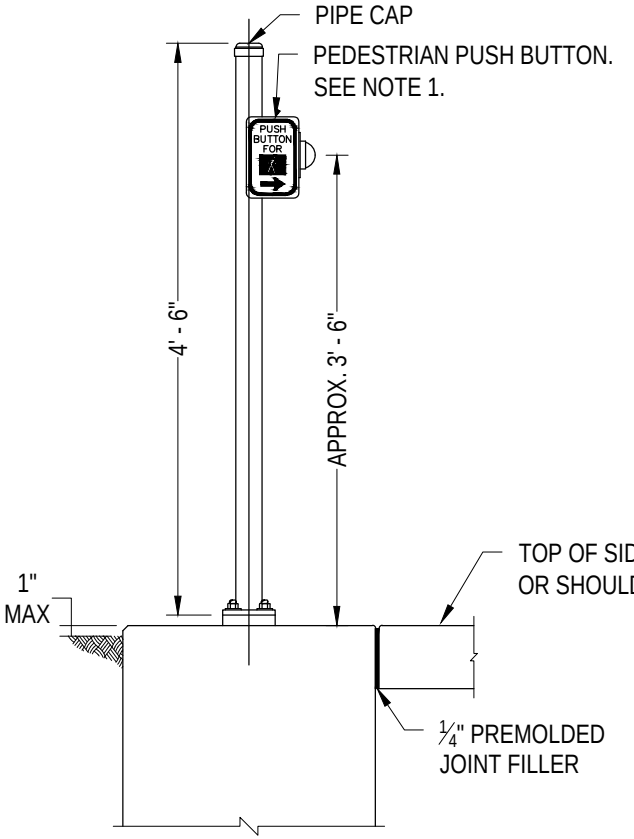

ELEVATION
WITHOUT LANDING

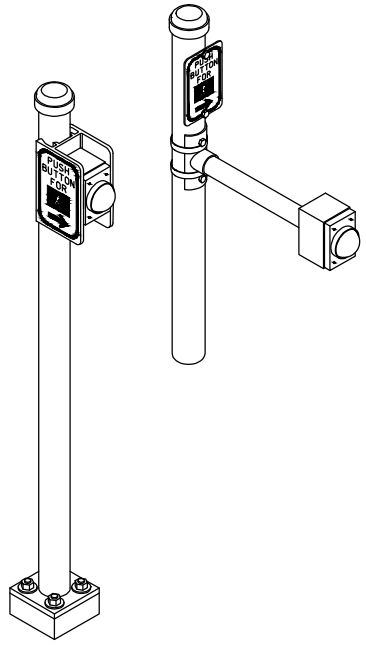

ISOMETRIC VIEW
PEDESTRIAN PUSH BUTTON POST

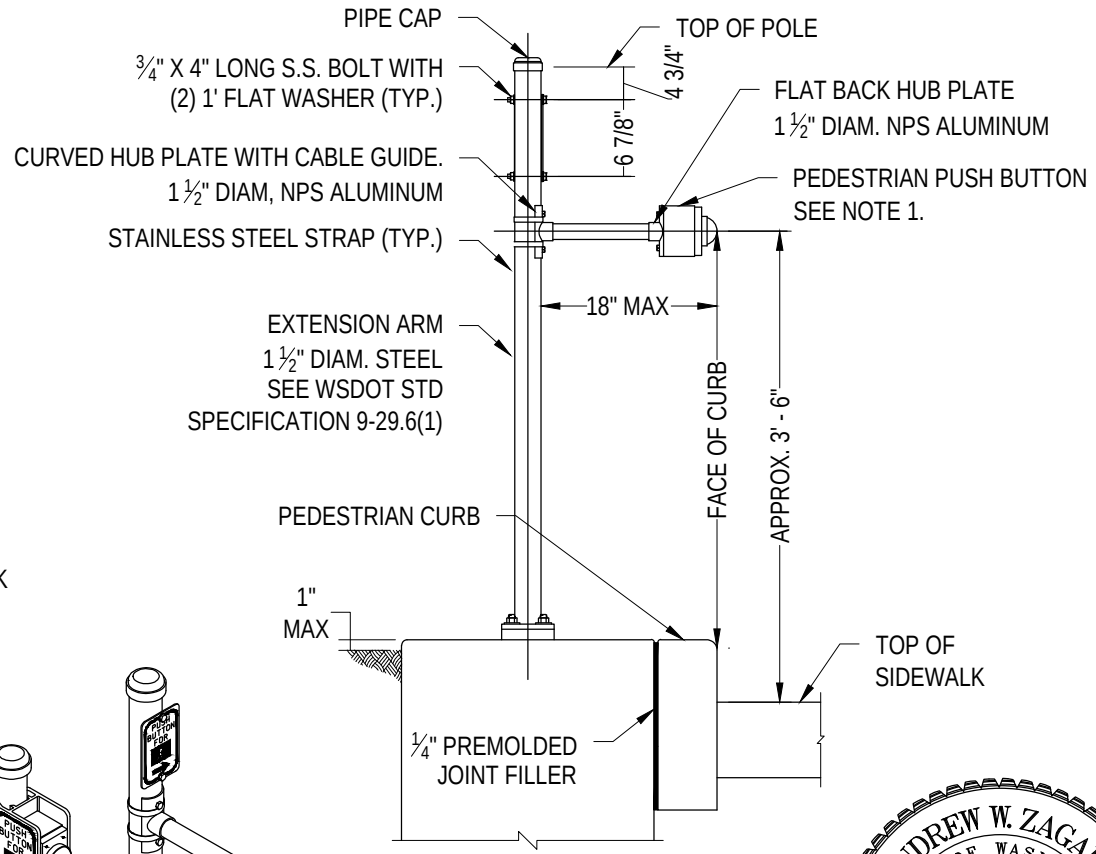

ELEVATION
WITH LANDING

NOTES:
1. SEE WSDOT STD PLAN J-20.26
FOR PEDESTRIAN PUSH BUTTON DETAILS.

Preliminary
11/09/2016 1:45:03 PM

CITY OF SAMMAMISH
DEPARTMENT OF PUBLIC WORKS

PEDESTRIAN PUSH BUTTON
POST

APPROVED BY
CITY ENGINEER _____ DATE _____

REV	DWN	CKD	DATE	FILE
	XXX	XXX	AUG-XX-2015	FIG09-17

REV. NO. X

Exhibit 4

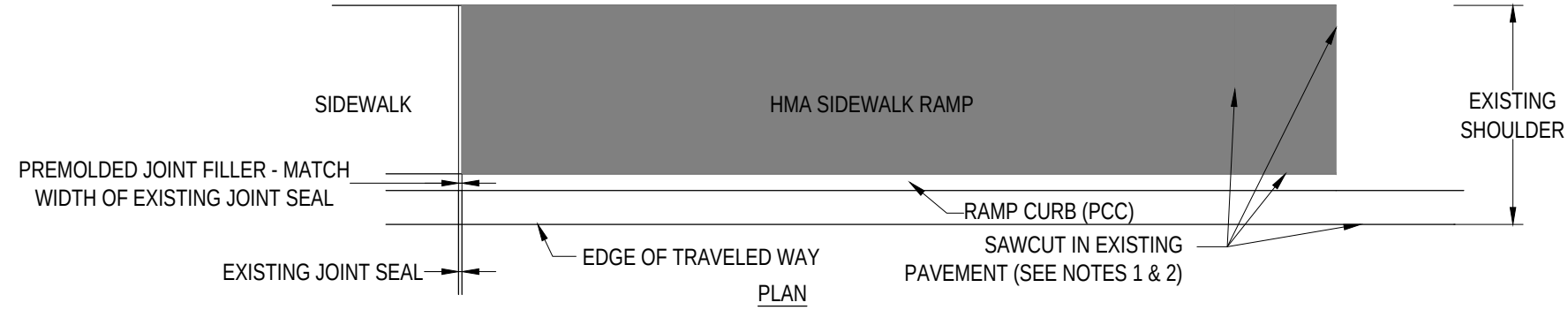

PLAN

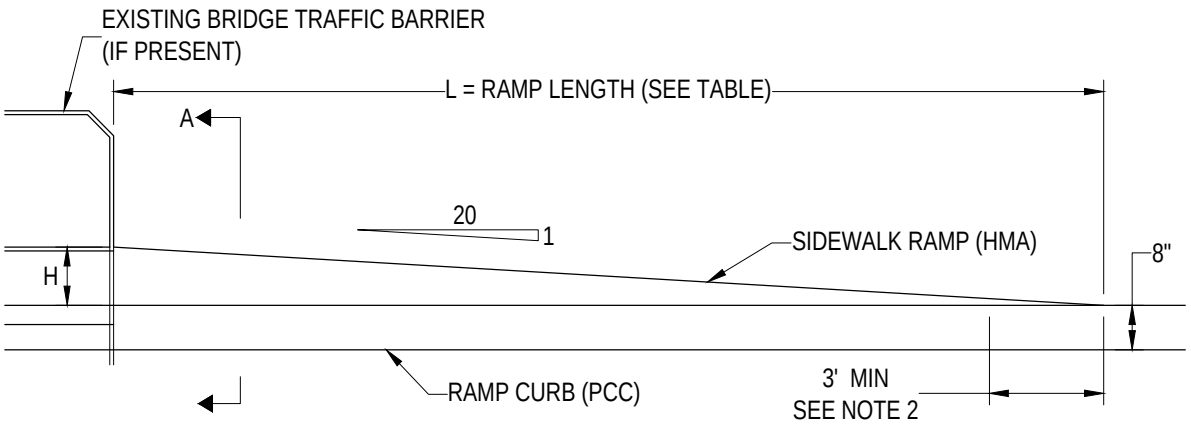

ELEVATION

NOTES:

1. THIS PLAN SHOWS A RETROFIT CONDITION. FOR DESIGN REFERENCE, "EXISTING" MAY BE INTERPRETED AS "TO BE CONSTRUCTED". FOR NEW CONSTRUCTION, OMIT THE EXISTING PAVEMENT AND SAWCUTS FROM THE DESIGN.

2. REMOVE A MINIMUM OF 3 FEET OF EXISTING PAVED SHOULDER AT THE BOTTOM OF THE RAMP, FOR EMBEDMENT OF NEW HMA.

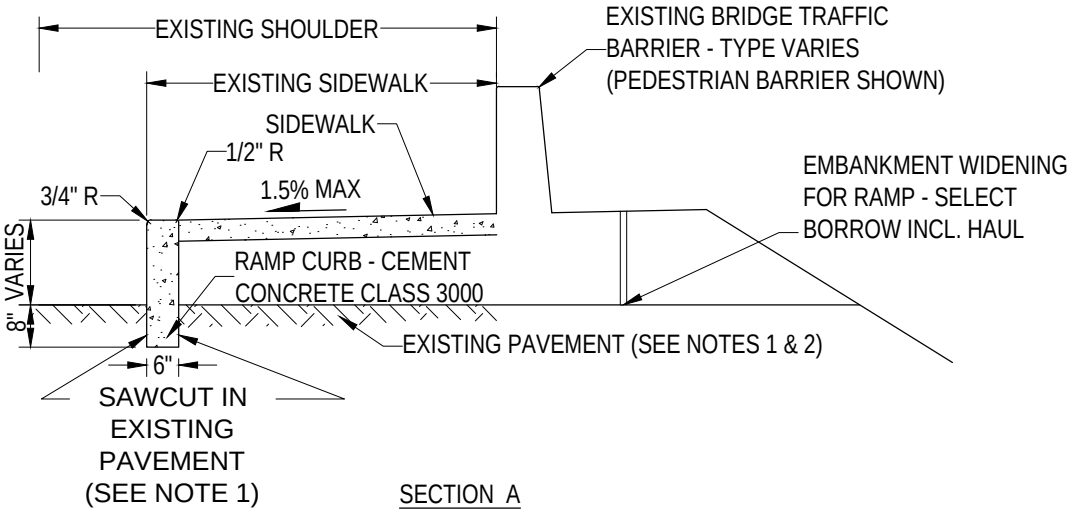

SECTION A

Preliminary

11/09/2016 1:45:06 PM

CITY OF SAMMAMISH
DEPARTMENT OF PUBLIC WORKS

SIDEWALK RAMP RETROFIT

APPROVED BY
CITY ENGINEER _____ DATE _____

REV	DWN	CKD	DATE	FILE
	XXX	XXX	AUG-XX-2015	FIG09-18

REV. NO. X

Exhibit 4

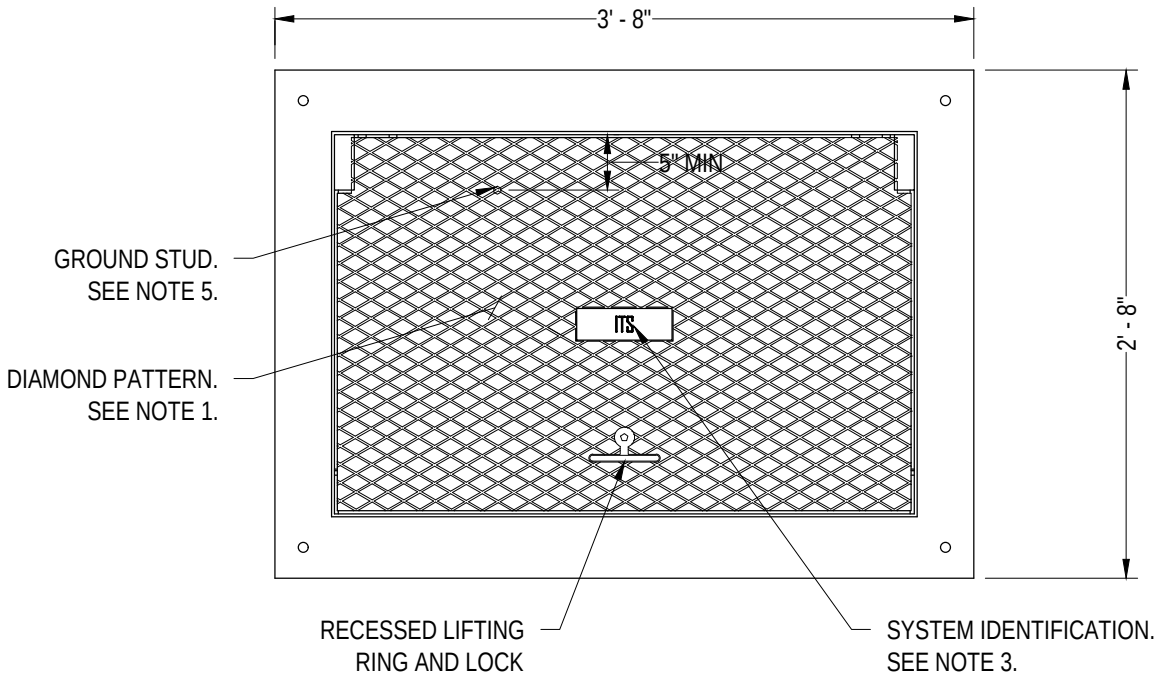

NOTES:

1. THE DIAMOND PATTERN SHALL BE A MINIMUM OF 3/32" THICK AND SHALL NOT BE USED IN PEDESTRIAN AND BICYCLE ZONES.

2. STANDARD DUTY PULL BOXES INSTALL IN SIDEWALKS, WALKWAYS, AND SHARED-USE PATHS SHALL HAVE A SLIP-RESISTANT COATING ON LID AND SHALL BE INSTALLED WITH THE SURFACE FLUSH WITH AND MATCHED TO THE GRADE OF THE SIDEWALK, WALKWAY, AND SHARED-USE PATHS. THE NON-SLIP SHALL BE IDENTIFIED WITH PERMANENT MARKING ON THE UNDERSIDE INDICATING THE TYPE OF SURFACE TREATMENT (SEE CONTRACT DOCUMENTS FOR DETAILS) AND THE YEAR OF MANUFACTURE. THE PERMANENT MARKING SHALL BE 1/8" INCH LINE THICKNESS FORMED WITH A STAINLESS STEEL WELD BEAD AND SHALL BE PLACED PRIOR TO HOT-DIP GALVANIZING.

3. THE SYSTEM IDENTIFICATION LETTERS SHALL BE 1/8" LINE THICKNESS FORMED BY ENGRAVING, CASTING, STAMPING, OR WITH A S.S WELD BEAD. DUCTILE IRON LID LETTERING SHALL BE RECESSED.

4. CEMENT CONCRETE SHALL BE CLASS 4000.

5. A 1/4-20 NCx3/4" STAINLESS STEEL GROUND STUD SHALL BE WELDED TO THE BOTTOM OF THE LID; INCLUDE (2) STAINLESS STEEL NUTS AND (2) STAINLESS STEEL FLAT WASHERS.

Preliminary

11/09/2016 1:45:11 PM

CITY OF SAMMAMISH
DEPARTMENT OF PUBLIC WORKS

SKID RESISTANT LID

APPROVED BY
CITY ENGINEER _____ DATE _____

REV	DWN	CKD	DATE	FILE
	XXX	XXX	AUG-XX-2015	FIG09-19

REV. NO. X

Exhibit 5

Standard Drawing #	Title
1-01	Roadway Section Principal Arterial
1-02	Roadway Section Minor Arterial
1-03	Roadway Section Collector Arterial
1-05	Roadway Section Non-Arterial Roadway
1-06	Pedestrian Bike Path Connection Between Through Street and Cul-de-Sac
1-07	Non-Arterial Roadway Section Half Street
1-08	Roadway Section Typical Alley
2-01	Intersection Landing
2-02	Traffic Circle
2-03	Shoulder Treatment
2-05a	Trench-Pavement Restoration Detail
2-05b	HMA Pavement Overlay For Trench Repair
2-06	Perpendicular Curb Ramp
2-07	Parallel Curb Ramp
2-08	Single Direction Curb Ramp
2-09	Combination Curb Ramp
2-11a	Monument Case and Cover with Riser
2-11b	Monument Case and Cover
2-14	Bus Turnout
2-15	Rock Retaining Wall
2-18	Planter Strip Detail
2-19a	Sight Obstruction
2-19b	Sight Obstruction
2-20	Residential Driveway
2-21	Dead End Hammerhead
2-22	Permanent Cul-de-Sac
2-23	Butt Joint Detail
3-01	Curb and Gutter Section Driveway Approach
3-02	Driveway Approach: Reverse Slope
3-03	Driveway Approach: Reverse Slope Without Amenity Zone
3-04	Driveway Approach Without Amenity Zone (8' Sidewalk Width)
3-05	Amenity Zone
3-06	Sidewalk
3-07	Asphalt Transition Ramp To Shoulder
3-08a	Curbs
3-08b	Extruded Curb Detail
3-09a	Concrete Curb Inlet
3-09b	Concrete Curb Inlet
3-11	Pedestrian Curb
3-12	Curb Extension
3-13a	Curb Extension Section
3-13b	Curb Extension Section
3-14	Curb Ramp Locations
3-15	Pedestrain Railing
3-16	Stairs
3-17	Cement Concrete Stairway

Exhibit 5

3-18	Chain Link Fence
~~3-19~~	~~Typical Sections for Trails~~
3-20	Greenbelt Fence
4-01	Channelization - Left Turn Lanes
4-02	Channelization - Vehicle and Bicycles
4-03a	Pavement Markings
4-03b	Raised Pavement Markers
4-04	Intersection Approach Striping
4-05	Pavement Symbols
4-06	Street Sign Installation
4-07	Curb Extension/Chicane Channelization
5-01	Rock Facing - Fill Section
5-02	Rock Facing Under Sidewalk
5-03	Bollards
5-04	Mailbox Stand Non-Arterial
5-05	Mailbox Stand Without Amenity Zone
5-06	Neighborhood Delivery & Collection Box Unity Installation
7-01	Beveled End Pipe Section
7-02	Trash Rack (Debris Cage) - Pipe End
7-03	Trash Rack (Debris Cage) - Conical
7-04	Catch Basin Type 1
7-05	Catch Basin Type 1L
7-06	Catch Basin Installation
7-07	Catch Basin Type 2 - 48", 54", 60", 72" & 96"
7-08	Catcn Basin - Type 2 Details
7-09	Manhole Type 1 - 48", 54" & 60"
7-10	Manhole Type 2 - 72" & 96"
7-11	Manhole Type 3 - 48", 54", 60", 72", 96"
7-12	Manhole Details
7-13	Locking Manhole Cover and Installation
7-14	Through-Curb Inlet and Vertical Curb Installation
7-15	Through-Curb Inlet Frame
7-16	Vaned Grate
7-17	Standard Grate
7-18	Standard Frame Installation
7-19	Solid Cover
7-20	Flow Restrictor (Tee)
7-21	Frop-T Shear Gate Detail
7-22	Flow Restrictor (Baffle)
7-23	Floatable Material Separator - 6" or 8" Pipe
7-24	Floatable Material Separator - 12" & Larger
7-25	Control Structure - 54" Diameter
7-26	Control Structure - 72" Diameter or Larger
7-27a	Swale Bioretention
7-27b	Swale Section Bioretention
8-01	Rigid Pavement Restoration Details
8-02	Flexible Pavement Patching

Exhibit 5

9-01	One-Lane, Two-Way Traffic Control With Flaggers
9-02	Pilot Car Operation
9-03	Single-Lane Closure For Multi-Lane Roadways
9-04	Double-Lane Closure For Multi-Lane Roadways
9-05	Shoulder Closure - Low Speed (40 MPH or Less)
9-06	Right Lane Closure with Shift - 5 Lane Roadway
9-07	Left Lane and Center Turn Lane Closure - 5 Lane Roadway
9-08	Lane Shift - Three Lane Roadway
9-09	Short Term Ramp Closures
9-10	Intersection Lane Closure - Three Lane Roadway
9-11	Intersection Lane Closure - Five Lane Roadway
9-12	Intesection Pedestrian Traffic Control
9-13	Temporary Pedestrain Ramp
9-14	Single-Lane Closure with Shift
9-15	Typical Roundabout Flagging Operation
9-16	Bike Rack
9-17	Pedestrian Push Button Post
9-18	Sidewalk Ramp Retrofit
9-19	Skid Resistant Lid

Exhibit 5

Updated: November 9, 2016

Exhibit 6

Public Works Standards Final Draft Comments

#	Page Number	Chapter/Section	Policy/Goal	Proposed Amendment to Draft	Comment Result From	Approved	Denied
1	Cover	Cover	N?A	Change Date to November 9, 2016	Current version to address latest edits		
2	3	Division 1, Chapter 1	Introduction	Proposed Additions to General Authority Section. (In Red)	Department Proposed clarrifcation.		
3	20	Chapter 4/4.5	Geotechnical Report	Formating under Section C.	Department proposed format correction		
4	23	Chapter 4/4.14	Financial Guarantee	Correction to (DCD) added "Department of Community Development	Department proposed grammar correction		
5	29	Chapter 6	Standards	Corrected Stormwater Comprehensive Plan Title	Department proposed grammar correction		
6	29	Chapter 6/6.1	Companion Documents	Added Guidelines for Geometric Design of Vary Low Volume Local Roads	Department proposed addition to follow current federal standards.		
7	40	Chapter 7/7.12	Traffic Calming Devices	Added "All proposed designs shall be reviewed and approved by the City Engineer."	Several items do not have standard details available and are based on geomentrics of each case. This statement is added to require a more detailed review.		
	40	Chapter 7/7.11	Curbing	Corrected A to be consistant with curb standards	Department Proposed clarrifcation.		
8	43	Chapter 8	Traffic Impact Analysis	Added "AM and/or"	Clarification for 10 trip requirement		
9	46	Chapter 9/9.1	Street Classification	Removed "-" from table	Department proposed grammar correction		
10	51	Chapter 9.5	Private Streets	Added requirements stated in other chapters to this secton for clarity	Requested by the MBA (Master Builders Association)		
11	50	Chapter 9/9.4	Woonerf	Substitured "Woonerf" for "alley" and "alleys"	Mayor Comments for grammar corrections where the word "alley" was used.		
12	57	Chapter 11/11.3	Access Clearance	Added Item E	Department Proposed clarrifcation.		
13	66	Chapter 12/12.6	Street End	Section B , Item 1, corrected dimension	Corrected to match detail dimensions		
14	70	Chapter 12/12.8	Private Streets	Table Corrections	In review of other Judidications as a result of council comments, the number of maximum units on a private street is limited to 9. The table is updated to clarify that a sidewalk is required for over 4 units. Alleys and Woonerfs are kept at a higher allowable number due to accomodate the recommended used in areas of high density such as the Town Center.		
15	70	Chapter 12/12.8	Private Streets	Corrections to Items C and D to conform with Table corrections	Department proposed grammar correction		
16	70	Chapter 12/12.8	Private Streets	Corrections to Items C and D to conform with Table corrections	Department proposed grammar correction		
17	71	Chapter 12/12.9	Dead End Street	Section B , Item 1, corrected dimension	Corrected to match detail dimensions		
18	74	Chapter 13/13.1	General	Added "All intersection designs shall meet the requirements for entering sight distance and stopping sight distances as stated in the above reference standards. "	Department Proposed clarrifcation to refenece Federal design standards.		
19	76	Chapter 13/13.7	Intersection Grades	B. Added verbiage stated in Item C to be consistent with each other.	Clarification as requested by public comment.		
20	77	Chapter 13/13.7	Intersection Grades	C. Added "may" to allow for design consideration if the two percent standard intersection slope cannot be achieved due to natural grades.	Clarification as requested by public comment.		
21	80	Chapter 13/13.9	Clear Site Triangles	*A. Obsstructions* : Corrections made to clearance requirements to match current design requirements as recommended by the Traffic Engineer	Department Proposed clarrifcation.		
22	80	Chapter 13,13.9	Clear Site Triangles	B. Clariifcation and removal of figure. Figure conflicts with standard detail. Corrections made to clearance requirements to match current design requirements as recommended by the Traffic Engineer	Department Proposed clarrifcation.		
23	81	Chapter 13,13.9	Clear Site Triangles	C. Clariifcation and removal of figure. Figure conflicts with standard detail. Corrections as recommended by the Traffic Engineer	Department Proposed clarrifcation.		
24	82	Chapter 13,13.9	Clear Site Triangles	D. Corrections as recommended by the Traffic Engineer	Department Proposed clarrifcation.		

Exhibit 6

Public Works Standards Final Draft Comments

#	Page Number	Chapter/Section	Policy/Goal	Proposed Amendment to Draft	Comment Result From	Approved	Denied
25	82	Chapter 13,13.9	Clear Site Triangles	E. Corrections as recommended by the Traffic Engineer	Department Proposed clarrifcation.		
26	91	Chapter 15/15.3	Mailboxes	Removed references to specific details for clarity	Clarification as requested by public comment.		
27	98	Chapter 15/15.5	Pedestrian Railing	Removed references to specific details for clarity	Clarification as requested by public comment.		
28	102	Chapter 16/16.2	Asphalt Pavement Design	Correction of "Class B" to "1/2" Hot Mix Asphalt	Department Proposed clarrifcation. (Class B is an older WSDOT asphalt class no longer used)		
	112	Chapter 19/19.1	Standards	Corrected A.	Department Proposed clarrifcation.		
	112	Chapter 19/19.1	Standards	Corrected C.	Department Proposed clarrifcation.		
29	120	Chapter 19/19.8	Landscaping	Added B.2 "1.2. Root barrier shall be required for all landscaping within amenity strips (aka landscape strips) within or adjacent to public roadway or drainage facilities"	Department Proposed clarrifcation.		
30	1	Appendix A	Acronyms	Added "HMA"	Department Proposed clarrifcation.		
31	7	Appendix A	Definitions	Driveway Definition changed for clarity	Clarification as requested by public comment.		
32	8	Appendix E	Traffic Impact Analysis	Proposed Grammar changes	Department proposed grammar correction		
33	1	Appendix F	Right of Way Street Tree List	Added proposed verbiage related to future additions and allowing use of Conifers	Department Proposed clarrifcation as a result of council comment.		
34	11	Appendix F	Right of Way Street Tree List	removed "Strawberry Tree"	Department Proposed clarrifcation as a result of council comment.		

Exhibit 7

801 228th Avenue SE, Sammamish, Washington 98075-9509
Phone: 425-295-0500 • Fax: 425-295-0600 • www.sammamish.us

Application for Deviation From Public Works Standards (PWS)

Permit Number: _____

Applicant:_____

Applicant Address/Phone/Email:_____

Applicant Signature: _____

Project Name: _____

Project Address: _____

Associated Applications: _____

Instructions to Applicant:

Pursuant to Chapter 6, Section 6.2 of the 2016 Public Works Standards, deviations to the PWS may be authorized only upon submittal and approval of information, plans, and/or design data by the engineer which indicates that the requested deviation is: (1) Conform to the intent and purpose of the Sammamish Municipal Code, (2) based upon sound engineering judgment; (3) that requirements for safety, environmental considerations, function, appearance, and maintainability are fully met; and (4) the deviation is in the best interest of the public.

Please be sure to include all plans, sketches, photos and maps which may assist in complete review and consideration of this deviation request. Failure to provide all pertinent information may result in delayed processing or denial of your request.

All deviations must be approved by the Public Works Director in writing prior to the start of construction.

General Description of Deviation Request and Applicable PWS Standards:

Description of Unique Circumstances Justifying Deviation Request:

Exhibit 7

Proposed Deviation Design and Detailed Description:

Exhibit 7

Decision Section

Decision: **APPROVED** / **DENIED**

The applicant has / has not demonstrated that the proposed variance is in the public interest and that requirements for safety, function, fire protection, appearance, and maintainability based upon sound engineering judgment are fully met.

Summary of Basis for Decision:

Review and Authorization Signature

Development Review Engineer:_____ Date: _____

City Engineer: _____ Date: _____

Public Works Director:_____ Date:_____

Exhibit 8

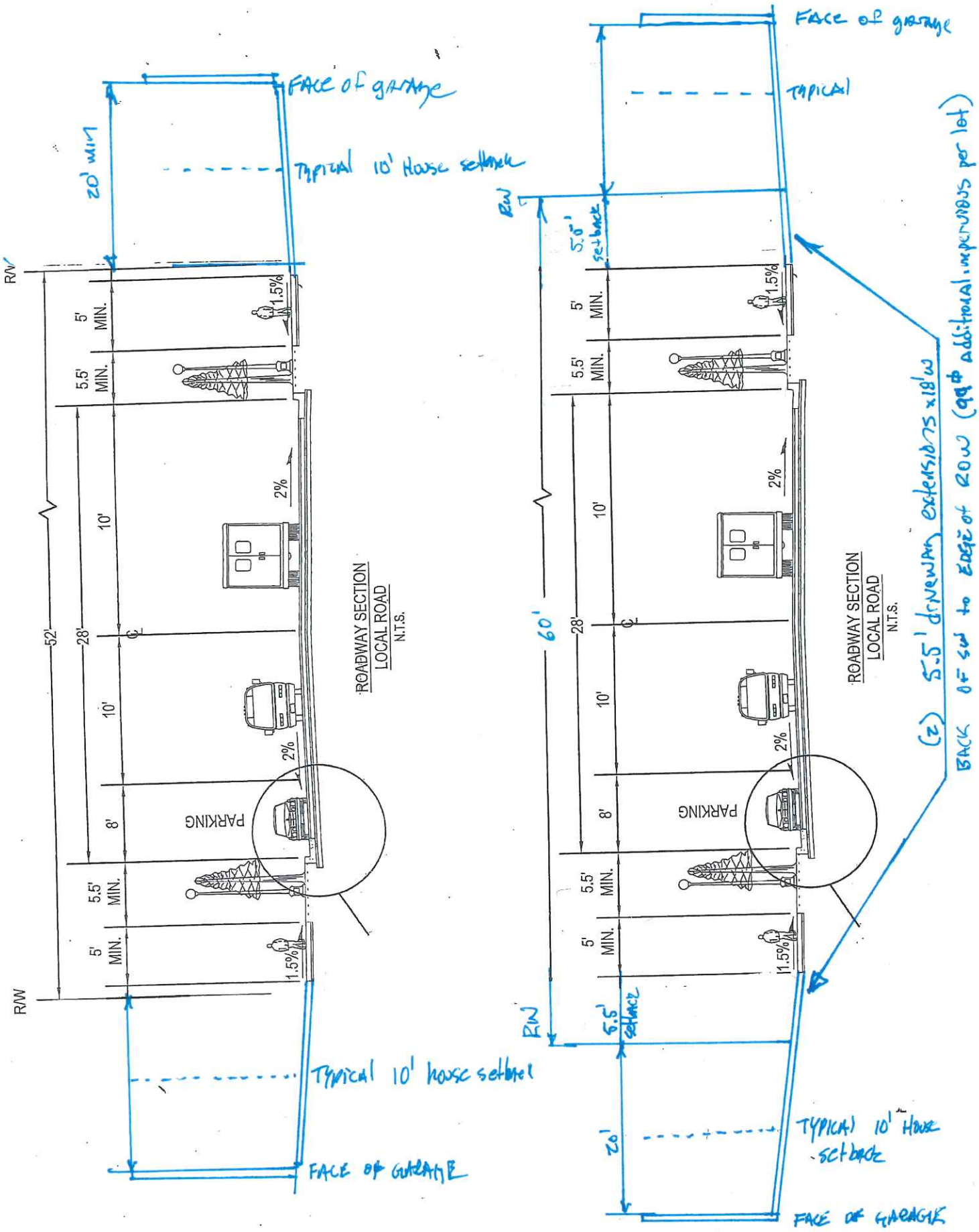
FACE of garage
20' min
Typical 10' House setback
R/W
5' MIN.
5.5' MIN.
1.5%
2%
10'
10'
8'
5.5' MIN.
5' MIN.
1.5%
52'
28'
PARKING
ROADWAY SECTION
LOCAL ROAD
N.T.S.
R/W
Typical 10' house setback
FACE OF GARAGE
FACE of garage
TYPICAL
R/W
5.5' setback
5' MIN.
5.5' MIN.
1.5%
2%
10'
10'
8'
5.5' MIN.
5' MIN.
1.5%
60'
28'
PARKING
ROADWAY SECTION
LOCAL ROAD
N.T.S.
R/W
5.5' setback
20'
TYPICAL 10' House setback
FACE OF GARAGE
(2) 5.5' driveway extensions x 18'w
BACK OF sw to EDGE of ROW (99# additional impervious per lot)

Exhibit 9

Steve et al:

I have now been able to do a significant and detailed review of the entire draft Public Works Standards included in our packet as item # 14 for the November 15th Council meeting. In my opinion this document is still lacking and missing many items most of which I believe were previously discussed and that I expected to have been included in this latest draft. I am personally not willing to move forward with approval until they are either corrected or further discussed by the Council.

Following are the issues I have with the latest version of the document:

Appendix F - The Street Tree List:

Unfortunately this list is same one reviewed previously and is conspicuous by its failure to include any evergreen trees and bushes. This is a very significant issue for me and I suspect others on the Council as well. Many have commented about the importance of evergreens in mitigating our increasing storm water problem and how they could contribute to that role as street trees. We have had extensive discussions as a group. None of the trees that I previously sent to the Council and staff have been included in the latest version of Appendix F (see attached file – again). Evergreens are conspicuous by their total absence from Appendix F – a situation which does not fit with our natural forest environment.

Previous discussions both in Council meetings and with staff have indicated many of the evergreens submitted on my listing would likely be included as options for appropriate locations. All of these are capable of doing well in the Puget Sound region and need to be a part of any approved update to our Public Works Standards. I am extremely disappointed that none have been included in the latest version of Appendix F. We should also review the Seattle Street Tree list which includes a number of both large and smaller evergreens.

I am requesting that we again review both my list (above) as well as the Seattle list for inclusion in the Sammamish Street Tree list. My list also includes a number of deciduous trees that are suited to our area.

I am also requesting that – where appropriate – we require that the majority of trees selected for use as street trees also be an essentially equal mix of evergreen and deciduous species to avoid having rows of a single variety that (1) look sterile and out of place and (2) pose the potential of 100% loss in the event of a significant disease outbreak at some point in the future.

Response:

1. Since the last council presentation, the contracted arborist provided a revised list of recommendations to add to the current list based on the submitted list. List added with the exception of the Douglas Fir at the recommendation by our Parks Department. (Separate Attachement)

2. In order to promote diversity the following requirement has been added to Section 15.2; "Tree selection within the right-of-way shall promote diversity of species. Improvements that require more than two (2) new trees shall provide alternating patters of more than once species of tree."

Exhibit 9

Other Comments – Exhibit 3:

1. 4.15 -- Insurance (Page 24) – Why were the minimum amounts required for insurance (previously stated at $1,000,000 for each occurrence and $2,000,000 in aggregate + $2,000,000 for project completion deleted from the latest version?

   Response: In review of this comment it has been verified that insurance requirements are stated in SMC 14.30 Right of Way Use Permits. The following has been added to the end of section 4.15 "Insurance requirement for work in the right of way are listed in SMC 14.30 Right of Way Use Permits."

2. 6.12.A.4 --Deviation from Engineering Standards (Page 31) - Should a reference to the Transportation Master Plan be added at this point or a reference to its future effectivity?

   Response: This is an edit to the Public Works Standards that will be done once there is an adopted Transportation Master Plan.

3. 7.8.F – Frontage Improvements (Page 37) – Suggest that we retain the original wording "or where critical areas require special consideration".

   Response: Instances where there are conflicted critical areas that are determined to be protected will be addressed through the deviation process. This process provides clear documentation in specific decisions that are beyond the standardized "normal" design requirements."

4. 7.10-D.6 – Illumination (Page 39) – Suggest that the restriction of local street lighting to only concrete poles should be changed to "or other permanent materials consistent with arterial street standards" in order to allow flexibility in providing unique neighborhood décor.

   Response: Deleting item 6.

5. 7.12.A – Traffic Calming Devices (Page 40) – Suggest that raised tables (speed humps) be allowed only in the vicinity of schools and be specifically restricted to non-arterial roads. Speed "bumps" should be specifically prohibited.

   Response: Deleted "Speed Hump" from line and added "Only allowed in school zones and on non-arterial roadways.

6. Chapter 9 – Street Classification (Page 45) – Recommend deletion of the word "Arterial" from "private Arterial Streets".

   Response: Deleted "Arterial"

7. Table 9.1 – Street Classification Characteristics (Page 47) – In the sections dealing with bus and transit stops for Principal and Minor Arterials recommend the wording be changed to "Allowed

– pullouts required". Also suggest that consideration be given to prohibiting school bus stops on Principal arterials.
Response: This is an item to be decided with the creation of a Transportation Master Plan. Once adopted the PWS will be edited to conform.

8. Table 9.2 – Non-Arterial Streets (Page 48) – A number of things here:

    a. Under local roads why are bus stops not allowed? Is this meant for Metro or does it also include school busses?

    Response: Edited to match Neighborhood Collector "Allowed for short segments (School Only)

    b. Recommend that the "Parking" notations be amended as follows for both the Neighborhood Collector and Local streets:
        i. Parking on one side only be limited to R-1 but not be allowed for R-4 except in short (600' or less) cul-de-sacs,
        ii. R-4 and greater would require parking capability on both sides for both Neighborhood Collector and Local streets (except for short cul-de-sacs).

    Response: Edited to match standard section listed above (Curb to curb widths based on zoning) parking on both sides for greater than R-4.

9. 12.6.B.4 – Street Ends (Page 66) – For cul-de-sacs I do not see the need for sidewalks on both sides. One side, including the island, will be sufficient given the low traffic volumes.

    Response: Need Full Council direction

10. 14.2.E - Sidewalks (Page 86) – I do not see the need for amenity strips for cul-de-sacs given the low traffic volumes. We should retain the standard ROW so that it can be used to facilitate the retention of and/or planting of trees.

    Response: Need Full Council direction

11. 14.4 – 14.9 – Regional/Connector/Local/Nature/Waterway Trails (Pages 86 – 89) – I don't believe that we have previously discussed any of these sections in connection with the Street Standards and wonder if their inclusion is appropriate. I can see them being more appropriately a part of the TMP discussion.

12. 16.3.A – Pavement Widening (Page 103) – The second sentence in this paragraph does not make any sense or is incomplete.

    Response: Correction of a typographic error. The "." Is replaced with a ","

Other Comments - Drawings – Exhibit 4:

1. Roadway Section-Non-arterial Roadway (Exhibit 4 Fig. 01-05) – This figure calls for parking only on one side of the street. This is OK for zoning below R-4 density but will not work in denser areas. I suggest that Figure 01-05 be modified per the following:

a. Relabel this drawing to reflect the lower zoning.
b. Delete the second sidewalk and amenity strip.
c. Retain the 60' ROW to use for tree planting.

Response: Discussion needed with full council if preference is to change city standards for sidewalks on both sides of roadways.

2. Roadway Section-Non-arterial Roadway (Exhibit 4 **NEW Fig. 01-04)** – This figure calls for parking only on one side of the street. This configuration should be used in areas with a minimum zoning of R-4 or greater. I suggest that a new Figure 01-04 be added to reflect the following:
   a. Relabel this drawing to reflect its appropriateness for use in higher zoning areas.
   b. Increase the ROW to 68' to allow parking on both sides of the street.
   c. Retain the second sidewalk and amenity strip only for R-6 or higher.

   Response: Discussion needed with full council if preference is to change city standards for increasing ROW width requirement. Detail has been added to show parking on both sides within a 60' ROW that matches current standard detail.

3. Bus Pullouts (Exhibit 4 - Fig 02-14) – I am glad to see this included but am wondering about three things relative to our design:
   a. The pullouts should be downstream from an intersection to allow the bus to take advantage of any signal lights.
   b. The acceleration lane appears a bit short for merging into traffic.
   c. In certain locations we may wish to lengthen it so that two larger busses could occupy it at the same time (e.g. Metro and The Microsoft Connector).

   Response: Note being added to the detail requiring pullouts to be located downstream of a signal intersection. Tapers match standards METRO details. Length of turn out will adjusted at each specific location. Lastly, when the Transportation Master Plan is adopted this detail may be adjusted to accommodate specific locations of heavy bus use.

4. Sight Distance Standards (Exhibit 4, Figs. 02-19A and 02-19B) – Why are there differences in sight distances for the same speeds when the only variable is a stop sign? Are the AASHTO standards correct in this situation?

   Response: The details follow AASHTO Standards.

5. Greenbelt and Chain Link Fencing (Exhibit 4, Figs. 03-19 and 03-20) – As our greenbelts are often used as wildlife corridors I would like to see a requirement for a break in the fencing every 50 yards or so if appropriate along roads and trails to allow for the movement of wildlife through the fencing between habitat zones.

   Response: Detail 3-19 has been removed. Adding note to 3-20 to require a break in fencing every 100' in wildlife corridors.

6. Channelization of Vehicles and Bicycles (Exhibit 4, Fig. 04-02) – would it not be better to keep the bicycle next to the curb rather than crossing at the intersection? This might be better than

having a weave of motorized traffic and bikes prior to the intersection, especially if some portion of the bike traffic is turning right anyway.

Response: Detail matches AASHTO design requirements for bike lanes at intersections.

I would be happy to meet with you and others on staff relative to the above as necessary to move forward with adoption of a final ordnance for the Public Works Street Standards. I also suggest that this next come to Council on December 13th.

Thank you,

Tom

Tom Odell
Councilmember
City of Sammamish

Exhibit 10

AFM Street Tree List Recommendations

Scientific & Common Name	Mature Height (ft)	Spread (ft)	Under Wires/ View Covenants	Min Strip Width (ft)	Flower Color	Fall Color	Comments
Acer platanoides 'Globosa' Globe Norway Maple	15	18	Yes	5	N/A	yellow	dense and round crown
Acer tataricum Tatarian Maple	25	20	Yes	5	N/A	orange	oval to rounded shape, often low branched
Amelanchier laevis 'Snowcloud' Snowcloud Serviceberry	28	20	Yes	4	white	red	edible fruit
Chamaecyparis nootkatensis 'Pendula' Weeping Alaskan cedar	30	10	No	8	N/A	N/A	narrow, conical, light gren foliage
Crataegus laevigata 'Crimson Cloud' Crimson Cloud Hawthorn	25	18	Yes	5	red	N/A	wavy branches
Fraxinus excelsior 'Aureafolia' Golden Desert Ash	20	18	Yes	5	N/A	yellow	small rounded tree, bright golden stems and twigs
Fraxinus excelsior 'Globosa' Globe Ash	20	20	Yes	5	N/A	yellow	dense and cylindical crown
Fraxinus latifolia Oregon Ash	50	30	No	6	N/A	yellow	native to PNW, prefers wet areas
Gingko biloba 'Princeton Sentry' Princeton Sentry Ginkgo	40	15	No	6	N/A	orange	narrowly pyramidal form, seedless male clone
Halesia carolina Carolina Silverbell	40	35	No	5	white	yellow	bell shaped flowers
Halesia carolina Wedding Bells Silverbell	20	15	Yes	5	white	yellow	white, bell shaped flowers
Malus 'Jarmin' Marilee Crabapple	24	10	Yes	5	pink/white	yellow	narrow, upright form, good disease resistance
Malus 'Royal Raindrops' Royal Raindrops Crabapple	20	15	Yes	4	red	red-orange	disease resistant, good fall colors
Metasequoia glyptostroboides Dawn Redwood	70	25	No	6	N/A	orange	fast growing, deciduous conifer
Pinus nigra Austrian pine	55	30	No	8	N/A	N/A	cold hardy, adaptable
Pinus strobus "Fastigiata' Fastigiate white pine	30	10	No	8	N/A	N/A	narrow, upright form, blue-green foliage
Prunus cerasifera 'Cripoizam' Crimson Pointe Plum	25	10	Yes	5	white	red	Pink buds open to white flowers that contrast nicely with the emerging purple foliage
Prunus cerasifera 'Thundercloud' Thundercloud Plum	30	20	Yes	5	pink	N/A	can produce significant fruit

Exhibit 10

Pinus flexillis 'Vanderwolf's Pyramid' Vanderwolf's Pyramid pine	40	20	No	8	N/A	N/A	Pyramidal shape, blue-green foliage
Prunus sargentii 'JFS-KW58' Pink Flair Cherry	25	15	Yes	5	pink	orange-red	upright narrow vase shape
Prunus serrulata 'Royal Burgundy' Royal Burgundy Cherry	20	15	Yes	5	pink	purple	vase shaped crown
Prunus 'Snow Goose' Snow Goose Cherry	20	20	Yes	5	white	orange	disease resistant, strongly upright form
Prunus virginiana 'Canada Red' Canada Red Chokecherry	25	20	Yes	5	white	red-purple	foliages turns from green in spring to dark purple as weather warms and a deeper red in autumn
Pyrus calleryana 'Jaczam' Jack Pear	16	10	Yes	5	white	yellow	tight, upright form
Sorbus americana 'Dwarfcrown' Red Cascade Mountain Ash	18	8	Yes	5	white	orange	small red berries in clusters
Sorbus x hybridia Oak-leaf Mountain Ash	30	20	No	5	white	orange	leaves are similar to English oak
Ulmus carpinifolia x parvifolia 'Frontier' Frontier Elm	40	30	No	5	N/A	red	resistant to dutch elm disease, vase shaped form

Native Evergreen Species - Use only in large planter strips 10' + Use only where lower branch growth will not interfere with sight lines

Abies grandis Grand fir	100	30	No	10	N/A	N/A	Native evergreen, conical
Pinus ponderosa Ponderosa pine	80	30	No	15	N/A	N/A	Native evergreen, adaptable to west-side
Pseudotsuga menziesii Douglas-fir	120	30	No	15	N/A	N/A	Native evergreen, large maturing species
Thuja plicata western red cedar	100	40	No	15	N/A	N/A	Native evergreen, large maturing species
Tsuga heterophylla western hemlock	100	30	No	10	N/A	N/A	Native evergreen, large maturing species

City Council Agenda Bill

Meeting Date: December 6, 2016 **Date Submitted:** November 29, 2016

Originating Department: Community Development

Clearances:

☐ Attorney	☑ Community Development	☐ Public Safety
☐ Admin Services	☐ Finance & IT	☐ Public Works
☑ City Manager	☐ Parks & Recreation	

Subject: A Resolution on proposals for the 2017 Comprehensive Plan Docket

Action Required: Approve Resolution

Exhibits:
1. Resolution
2. Information Sheets

Budget: N/A

Summary Statement: At the last City Council meeting on November 15, 2016, motions to approve a resolution to docket proposed amendments to the Comprehensive Plan to be considered as part of the 2017 work program failed 3-3, with one City Council member excused for absence. The City Manager, in consultation with the City Attorney, has subsequently determined City Council may consider a motion to approve a new resolution which is expressly different than the motions previously considered on November 15.

Due to the nature of two of the proposed amendments impacting significant regulatory changes as well as future capital projects, the City Manager is requesting City Council consider a motion to approve a new resolution, included as Exhibit 1, to docket two proposed amendments to the Comprehensive Plan to be considered as part of the 2017 work program.

Background: The Sammamish Municipal Code, in accordance with the Growth Management Act, allows the City to consider certain types of amendments to the Comprehensive Plan on an annual basis. These amendments fall into two categories: text amendments, which address technical updates and do not require substantive changes to policy language, and site-specific land use map amendments, which seek to change the future land use map zoning designation of an individual's or group of individuals' property.

The City accepted applications for Comprehensive Plan docket proposals from mid-August through September 30. The City received four citizen amendment proposals and submitted four proposals of its own. These amendments are outlined below; further information about each proposal is included as Exhibit 2.

The decision of whether to approve a proposal to be on the docket is based on the ability of the City to potentially make the amendment legally as well as whether the City can complete the required legislative review process in a timely manner. Other consideration factors may include competing legislative priorities and how recent the information is being proposed for amendment.

If any of the proposals are approved and/or proposals are added by City Council, a full analysis of such would be placed on the City's 2017 work plan, and they would be returned to the Planning Commission and City Council for legislative review, recommendation and decision.

The Planning Commission deliberated on the proposed amendments at a study session on October 27, 2016, and at a Public Hearing on November 3, 2016. The Planning Commission issued a recommendation to City Council to add all eight proposals to the 2017 docket, but recognized the City Council may need to prioritize these proposals as part of a larger City wide work programming effort for 2017.

The City Council discussed these docket proposals at a November 8, 2016 work session. On November 15, 2016, the City Council completed a Public Hearing and motions to docket proposal #'s 4, 5, 6, 7 and 8, as referenced below, failed 3-3.

1. Debbie Treen
    - Amend future land use map designation of one parcel from Residential-1 (R-1) to R-4
2. Jolie Imperatori on behalf of five landowners
    - Amend future land use map designation of seven parcels from R-1 to R-4
3. Maclean Family LLC
    - Amend future land use map designation of two parcels from R-6 and R-12 to Neighborhood Business
4. City of Sammamish – Department of Community Development
    - Amend future land use map designation of Mars Hill Property from R-1 to Community Business
5. City of Sammamish – Department of Community Development
    - Amend future land use map designation of Recreation Center property from R-12 and R-18 to Community Business
6. City of Sammamish – Department of Public Works
    - Amend Transportation element to update the City's concurrency project list and the City's Traffic Impact Fee, as well as other traffic model updates reflecting growth and the annexation of Klahanie.
7. City of Sammamish – Department of Public Works
    - Amend Comprehensive Plan to be consistent with revised Storm and Surface Water Management Comprehensive Plan, Surface Water Design Manual, Public Works Standards and Low Impact Development codes, among other minor edits.
8. Mary Wictor
    - Amend Environment & Conservasation element background information section to update maps and add to the list of streams of special significance.

Financial Impact: There is no financial impact directly associated with approval of this Resolution.

Recommended Motion: Approve the Resolution, included as Exhibit 1, to docket proposed amendments #'s 6 and 7 to the Comprehensive Plan to be considered as part of the 2017 work program.

Bill # 11

Exhibit 1

CITY OF SAMMAMISH
WASHINGTON
Resolution No. R2016-___

A RESOLUTION OF THE CITY OF SAMMAMISH, WASHINGTON RELATED TO SETTING THE COMPREHENSIVE PLAN AMENDMENT DOCKET FOR 2017

WHEREAS, the City of Sammamish plans under Chapter 36.70A RCW, the Growth Management Act ("GMA"), which requires cities to adopt a comprehensive plan that is consistent with the GMA and with county and regional planning policies;

WHEREAS, the City Council initially adopted the City's Comprehensive Plan in 2003 by Ordinance O2003-130, and has adopted various subsequent revisions; and

WHEREAS, the City Council updated the Sammamish Comprehensive Plan in accordance with RCW 36.70A.130 on October 26, 2015 ("2015 Comprehensive Plan") by adopting Ordinance O2015-396; and

WHEREAS, Sammamish Municipal Code (SMC) Chapter 24.15.040 authorizes the City to consider site-specific land use map amendments and text amendments to the Comprehensive Plan on an annual basis; and

WHEREAS, City staff solicited Comprehensive Plan amendment proposals from citizens and City departments in August and September 2016; and

WHEREAS, a total of eight proposals were submitted and deemed complete, including four from the general public and four from City departments; and

WHEREAS, proposals that are included on the 2017 docket will be added to the City's 2017 work plan, thoroughly analyzed, and returned to the Planning Commission and City Council for consideration; and

WHEREAS, on October 27, 2016, the Planning Commission held a work session on the proposals for the 2017 Comprehensive Plan docket; and

WHEREAS, on November 3, 2016, the Planning Commission held a public hearing on the proposals for the 2017 Comprehensive Plan docket, considered public comment, and made a recommendation to the City Council regarding which proposals to include on the 2017 docket; and

WHEREAS, on November 8, 2016, the City Council held a work session on the proposals for the 2017 Comprehensive Plan docket; and

WHEREAS, on November 15, 2016, the City Council held a public hearing on the proposals for the 2017 Comprehensive Plan docket in order to provide further opportunity for public comment and participation;

NOW, THEREFORE, THE CITY COUNCIL OF THE CITY OF SAMMAMISH, WASHINGTON, DO RESOLVE AS FOLLOWS:

Section 1. Docket Decision. The City Council of the City of Sammamish hereby approves the following proposals to be included on the 2017 Comprehensive Plan docket:

6. City of Sammamish – Department of Public Works
    - Amend Transportation element to update the City's concurrency project list and the City's Traffic Impact Fee, as well as other traffic model updates reflecting growth and the annexation of Klahanie.
7. City of Sammamish – Department of Public Works
    - Amend Comprehensive Plan to be consistent with revised Storm and Surface Water Management Comprehensive Plan, Surface Water Design Manual, Public Works Standards and Low Impact Development codes, among other minor edits.

PASSED BY THE CITY COUNCIL AT A REGULAR MEETING THEREOF ON THE _____ DAY OF DECEMBER, 2016.

CITY OF SAMMAMISH

_____
Mayor, Donald J. Gerend

ATTEST/AUTHENTICATED:

_____
Melonie Anderson, City Clerk

Approved as to form:

_____
Michael R. Kenyon, City Attorney

Filed with the City Clerk:
Passed by the City Council:
Publication Date:
Resolution No.

Exhibit 1

Exhibit 2

City of Sammamish Washington

Department of Community Development

801 - 228th Ave. SE, Sammamish, WA. 98075 - Phone: 425-295-0500 - Fax: 425-295-0600 - Web: www.sammamish.us

2017 COMPREHENSIVE PLAN DOCKET PROPOSAL #1

SITE-SPECIFIC LAND USE MAP AMENDMENT PROPOSAL

Applicant

Debbie Treen

Parcel Information

Parcel Number	Size	Current Land Use Zoning	Future Land Use Zoning	Proposed Future Land Use Zoning
0624069056	1.61 acres	R-1	R-1	R-4

Description of Proposed Amendment and Summary of Applicant Justification

The applicant proposes changing the long-term zoning designation of her 1.6-acre site (parcel 0624069056), where there is currently one single-family residence, from Residential-1 (R-1) to R-4. The applicant's parcel, along with a parcel across East Lake Sammamish Parkway that is not part of this proposal, are R-1 parcels surrounded by R-4 parcels. The applicant states that no change in land use is anticipated; she cites land use patterns supporting complementary and compatible development in support of her proposal.

Description of Site Geographic and Environmental Context

The property is accessible from East Lake Sammamish Road, which forms its eastern edge, and slopes downward to East Lake Sammamish Place. The residence is on the northern portion of the property. The property is within a number of environmentally sensitive area overlays, including an erosion hazard area, landslide hazard area, and a no-disturbance zone. The southern half of the property is dominated by an approximately 45% slope over about 100 feet, qualifying it to be designated as a steep slope hazard area.

Ability for Staff to Complete Analysis in 2017

The Department of Community Development has the resources to complete a full analysis and recommendation of this proposal, and recommends it for placement on the 2017 Comprehensive Plan docket.

Map

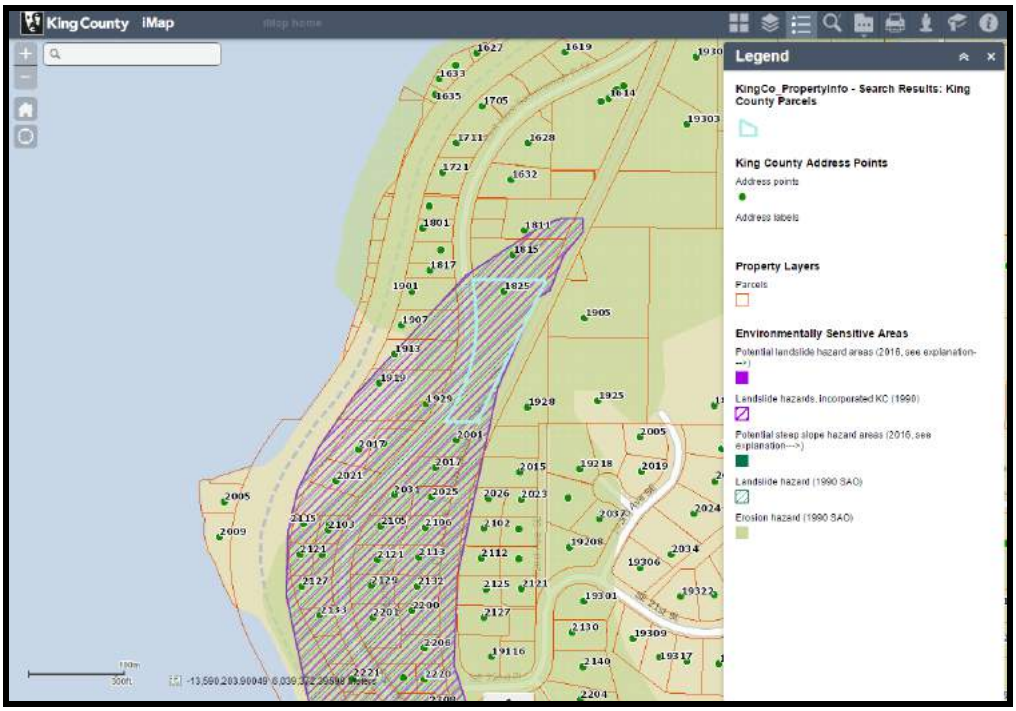

Figure 1: Treen property with environmentally sensitive area overlays

Figure 2: Aerial view of Treen property

Figure 3: Existing Zoning

Exhibit 2

City of Sammamish Washington

Department of Community Development

801 - 228th Ave. SE, Sammamish, WA. 98075 - Phone: 425-295-0500 - Fax: 425-295-0600 - Web: www.sammamish.us

2017 COMPREHENSIVE PLAN DOCKET PROPOSAL #2

SITE-SPECIFIC LAND USE MAP AMENDMENT PROPOSAL

Applicant:

Jolie Imperatori on behalf of 5 property owners

Parcel Information

Parcel Number	Size	Current Land Use Zoning	Future Land Use Zoning	Proposed Future Land Use Zoning
2325069039	4.85 acres	R-1	R-1	R-4
2325069083	2.25 acres	R-1	R-1	R-4
2325069024	4.95 acres	R-1	R-1	R-4
2325069025	1.82 acres	R-1	R-1	R-4
2325069040	7.48 acres	R-1	R-1	R-4
2325069044	2.77 acres	R-1	R-1	R-4
2325069067	3.17 acres	R-1	R-1	R-4

Description of Proposed Amendment and Summary of Applicant Justification

The applicant is requesting a comprehensive plan amendment to change the future land use map associated with the properties listed above. The request would subsequently change the future land use designation associated with the properties from R-1 to R-4, thus increasing the density allowed for these properties.

The Applicant insists the change would improve traffic congestion, bring sanitary sewerage to the neighborhood, and the change would be consistent with the zoning throughout the area.

The Applicant claims that this approach is the "best plan for growth and to look ahead for opportunities so that growth in Sammamish is wisely planned not crisis management, for sewers, water, roads, parks, and schools etc."

Description of Site Geographic and Environmental Context

The majority of the properties contain single family residential structures that are situated near 244th Avenue NE. The properties are mostly forested as they extend geographically towards the east. The properties slope to a

lower elevation towards the northeast. The neighboring properties are zoned predominantly R-1, however there are R-4 properties to the southwest and a small cluster to the southeast. The zoning outside City limits is predominantly RA-5 with a few RA-2.5 parcels to the northeast.

Ability for Staff to Complete Analysis in 2017

The Department of Community Development has the resources to complete a full analysis and recommendation of this proposal, and recommends it for placement on the 2017 Comprehensive Plan docket.

Maps

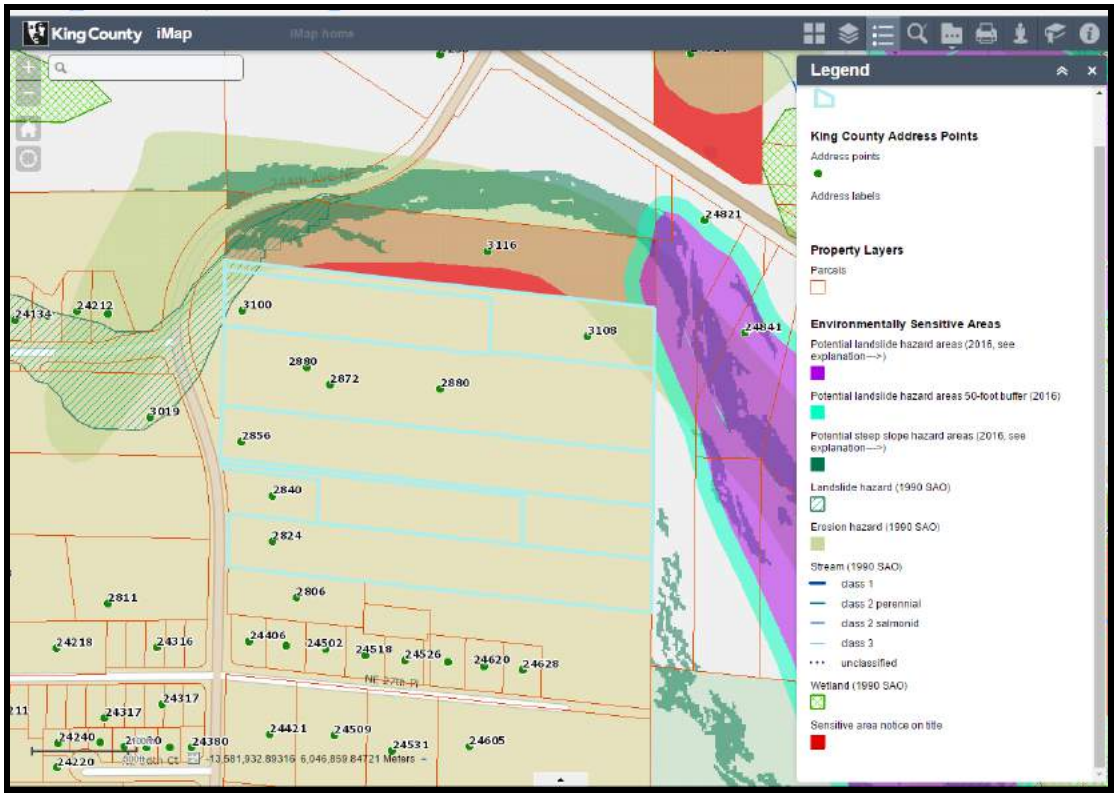

Figure 1: Imperatori properties with environmentally sensitive area overlay

Figure 2: Aerial view of properties

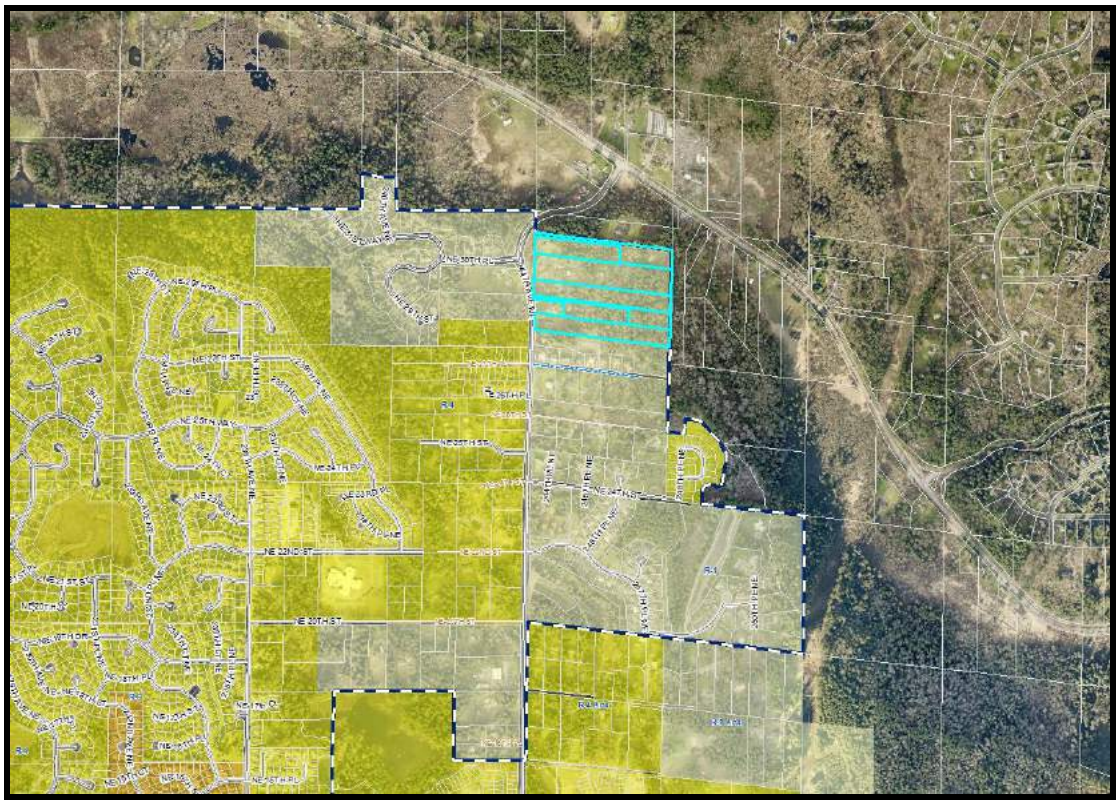

Figure 3: Existing zoning

Exhibit 2

City of Sammamish Washington

Department of Community Development

801 - 228th Ave. SE, Sammamish, WA. 98075 - Phone: 425-295-0500 - Fax: 425-295-0600 - Web: www.sammamish.us

2017 COMPREHENSIVE PLAN DOCKET PROPOSAL #3

SITE-SPECIFIC LAND USE MAP AMENDMENT PROPOSAL

Applicant

Maclean Family LLC, c/o Gordon and Mickey Maclean

Parcel Information

Parcel Number	Size	Current Land Use Zoning	Future Land Use Zoning	Proposed Future Land Use Zoning
2224069064	7.34 acres	R-6	R-6	Neighborhood Business
2224069065	0.29 acres	R-12	R-12	Neighborhood Business

Description of Proposed Amendment and Summary of Applicant Justification

The applicant is requesting a comprehensive plan amendment to change the future land use map associated with the properties listed above. The request would subsequently change the future land use designation associated with the properties from R-6 and R-12 respectively to Neighborhood Business (NB), thus changing the use from residential to commercial.

The property is adjacent to a well-traveled intersection and residential development at the intersection is not the best and most efficient use of the property. The access severely limits what can be developed and the applicant believes neighborhood commercial or a childcare facility would be a better fit. Residential development would be hindered by the right-in-right-out access patterns on Issaquah Pine Lake Road and Issaquah Fall City Road. Most of the large property is wetland and unusable. The applicant is considering allowing the City to use the smaller parcel as a formal sign/gateway to the City.

Description of Site Geographic and Environmental Context

The properties are located at the intersection of Issaquah Pine Lake Road and Issaquah Fall City Road. The larger parcel contains a destroyed single family residence and associated accessory structures. The property slopes to a lower elevation north of the residence. A large wetland system exists at the bottom of the slope, which will limit the size of potential future development to the area south of the slope. The smaller parcel contains multiple significant, landmark, and heritage trees and is zoned at a higher

residential density. The intersection of Issaquah Pine Lake Road and Issaquah Fall City Road is well traveled and access to the site is limited.

Ability for Staff to Complete Analysis in 2017

The Department of Community Development has the resources to complete a full analysis and recommendation of this proposal, and recommends it for placement on the 2017 Comprehensive Plan docket.

Maps

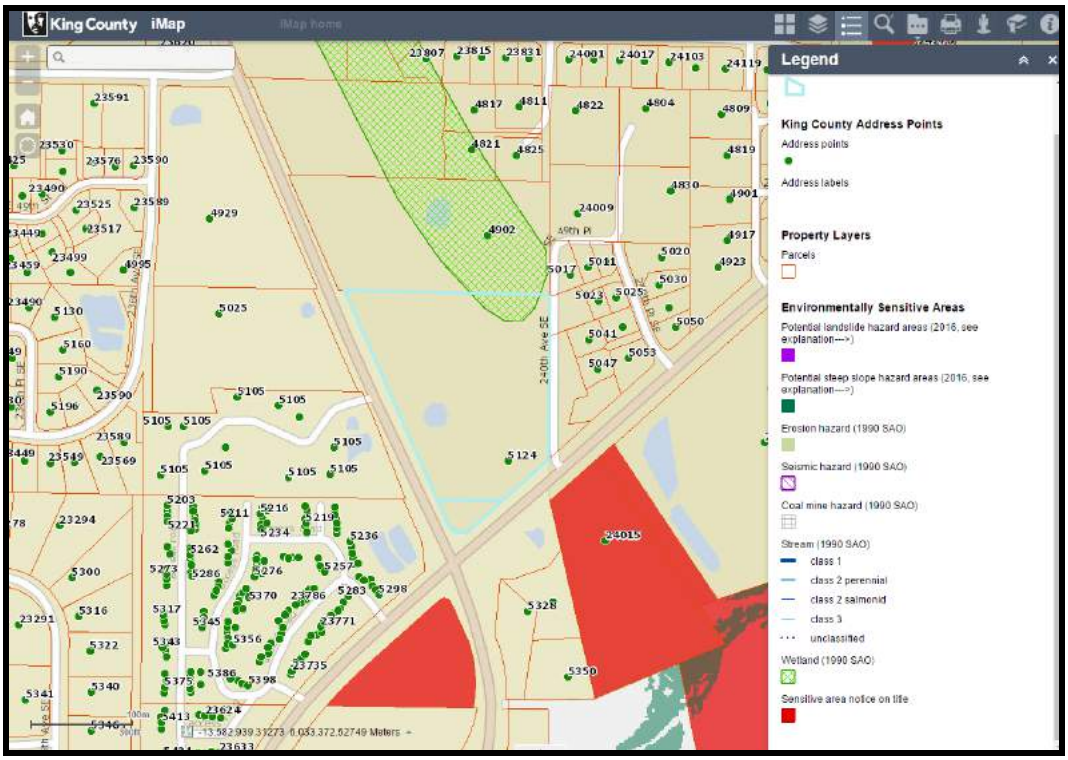

Figure 1: Maclean property with environmentally sensitive area overlays

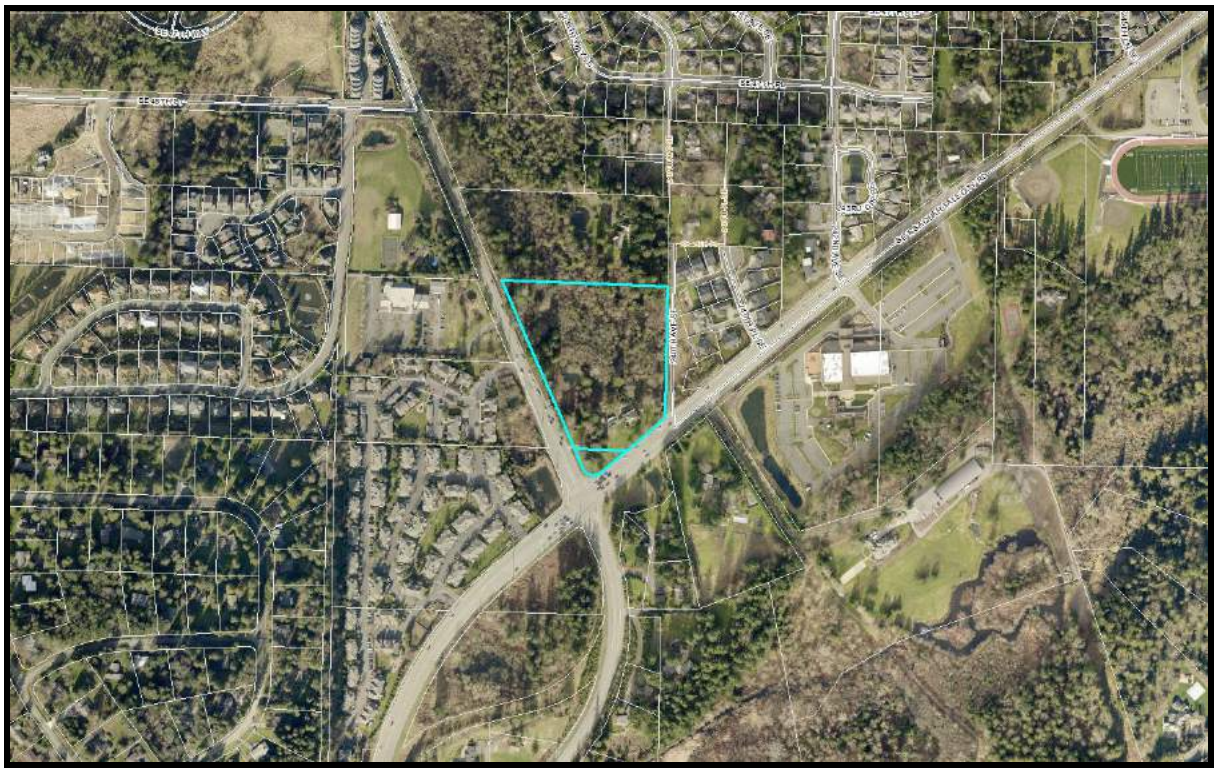

Figure 2: Aerial view of Maclean property

Figure 3: Existing zoning

Exhibit 2

City of Sammamish Washington

Department of Community Development

801 - 228th Ave. SE, Sammamish, WA. 98075 - Phone: 425-295-0500 - Fax: 425-295-0600 - Web: www.sammamish.us

2017 COMPREHENSIVE PLAN DOCKET PROPOSAL #4

SITE-SPECIFIC LAND USE MAP AMENDMENT PROPOSAL

Applicant

City of Sammamish

Parcel Information

Parcel Number	Size	Current Land Use Zoning	Future Land Use Zoning	Proposed Future Land Use Zoning
3425069017	21.54 acres	R-6 Interim	R-1	Community Business

Description of Proposed Amendment and Summary of Applicant Justification

The City proposes changing the future land use and zoning designations of the 21.5 acre former Mars Hill Property from Residential-1 (R-1) to Community Business (CB).

Changing the zoning to CB retains the ability of the City to allow for a range of other retail developments to complement the adjacent Inglewood CB zone and upcoming Town Center development. The presence of a 30,000-square foot building on the property makes it an unlikely site for residential development.

Description of Site Geographic and Environmental Context

The site is located in an urbanized area of the City on 228th Ave NE, which is a principal arterial and a major thoroughfare. The site is developed with an approximately 31,000 square foot building (built in 2008) and associated parking. The site is accessed from both E Main Street and 228th Ave NE.

Adjacent uses include a mix of undeveloped parcels, residential, and educational. A commercial shopping center and civic uses are within close proximity. Furthermore, the site is just outside of the City's Town Center boundary.

The site is generally flat and immediately adjacent to wetlands associated with the George Davis Creek.

Ability for Staff to Complete Analysis in 2017

The Department of Community Development has the resources to complete a full analysis and recommendation of this proposal, and recommends it for placement on the 2017 Comprehensive Plan docket.

Maps

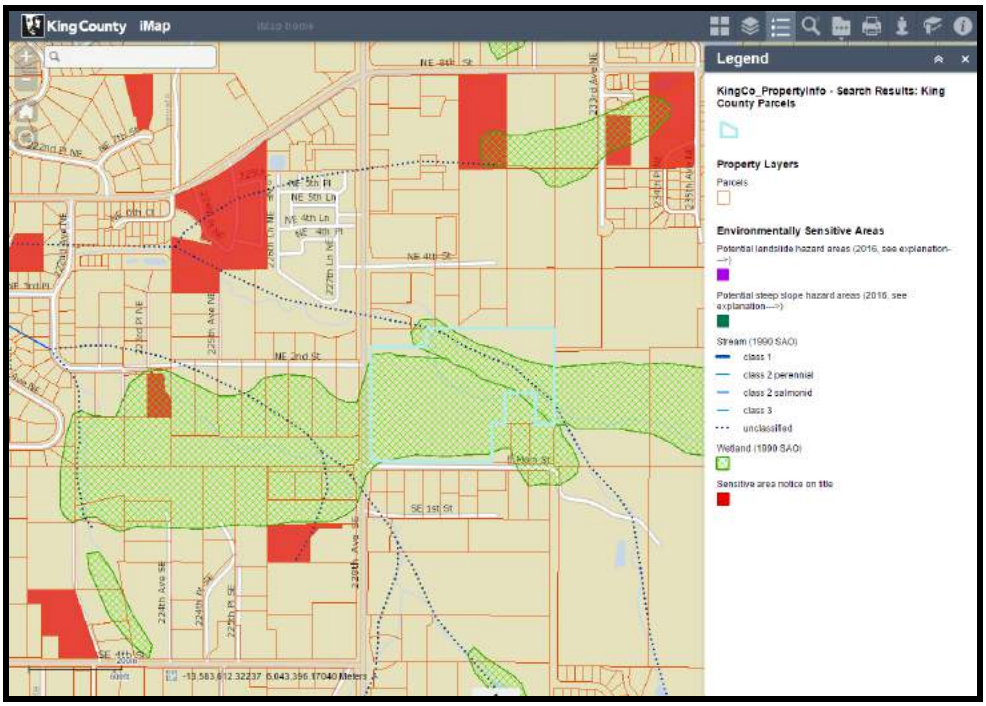

Figure 1: Mars Hill property with environmentally sensitive area overlays

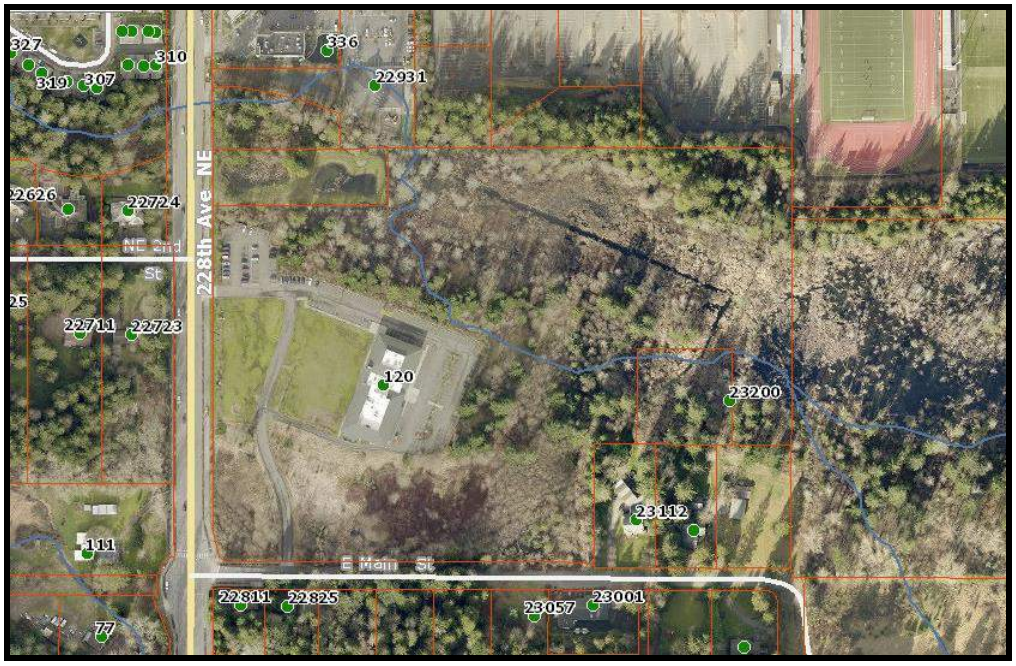

Figure 2: Aerial view of Mars Hill property

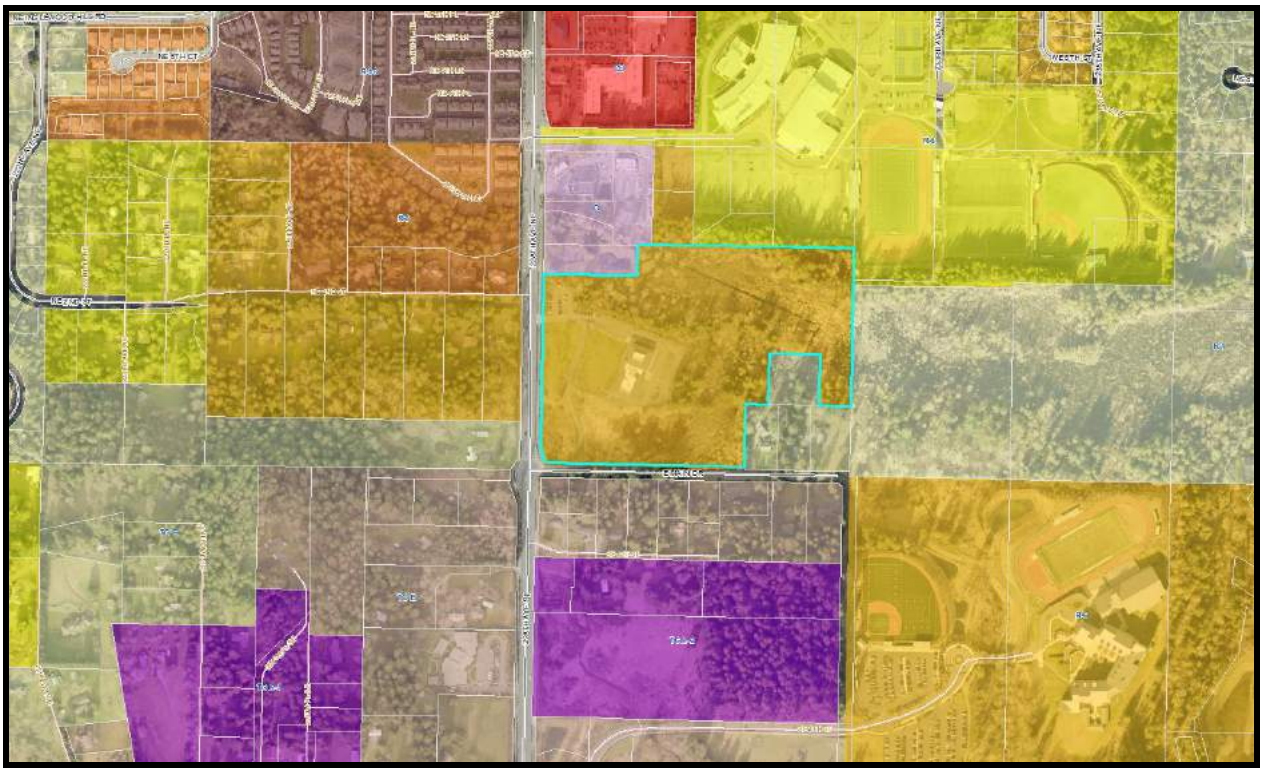

Figure 3: Existing Zoning

Exhibit 2

City of Sammamish Washington

Department of Community Development

801 - 228th Ave. SE, Sammamish, WA. 98075 - Phone: 425-295-0500 - Fax: 425-295-0600 - Web: www.sammamish.us

2017 COMPREHENSIVE PLAN DOCKET PROPOSAL #5

SITE-SPECIFIC LAND USE MAP AMENDMENT PROPOSAL

Applicant

City of Sammamish

Parcel Information

Parcel Number	Size	Current Land Use Zoning	Future Land Use Zoning	Proposed Future Land Use Zoning
2825069033	2.05 acres	R-12	R-12	Community Business
3325069178	0.17 acres	R-18	R-18	Community Business

Description of Proposed Amendment and Summary of Applicant Justification

The City proposes changing the long-term zoning designation of the 2.2-acre site known as the Recreation Center, currently leased to and operated by the Boys & Girls Club, from Residential-12 (R-12; parcel 2825069033) and R-18 (parcel 3325069178) to Community Business (CB). Originally a King County Library building, the City acquired the property in the spring of 2009, and has leased the property to the Boys & Girls Club since a renovation in 2011. Changing the zoning to CB retains the ability of the City to allow use of the property as a recreation facility while also potentially allowing for a range of other retail developments to complement the Inglewood CB zone in which it sits.

Description of Site Geographic and Environmental Context

The site, made up of two parcels, sits at the northwest corner of the intersection of 228th Ave SE, one of Sammamish's Principal Arterial roads, and NE Inglewood Hill Road, a minor arterial. The 2.2-acre site currently hosts the Sammamish EX3 Teen & Recreation Center, a 10,466-square foot building formerly occupied by a branch of the King County Library, along with approximately 70 parking spaces. The property has a dedicated ingress and egress from both the south-bound side of 228th Ave SE and the west-bound side of NE Inglewood Hill Road. The other three areas of the intersection of 228th and NE Inglewood Hill Road are occupied by commercial properties; to the west and north of the property are multi-family residences. There are no environmentally critical areas on either parcel. These properties are within the Inglewood Community Center zone.

Ability for Staff to Complete Analysis in 2017

The Department of Community Development has the resources to complete a full analysis and recommendation of this proposal, and recommends it for placement on the 2017 Comprehensive Plan docket.

Maps

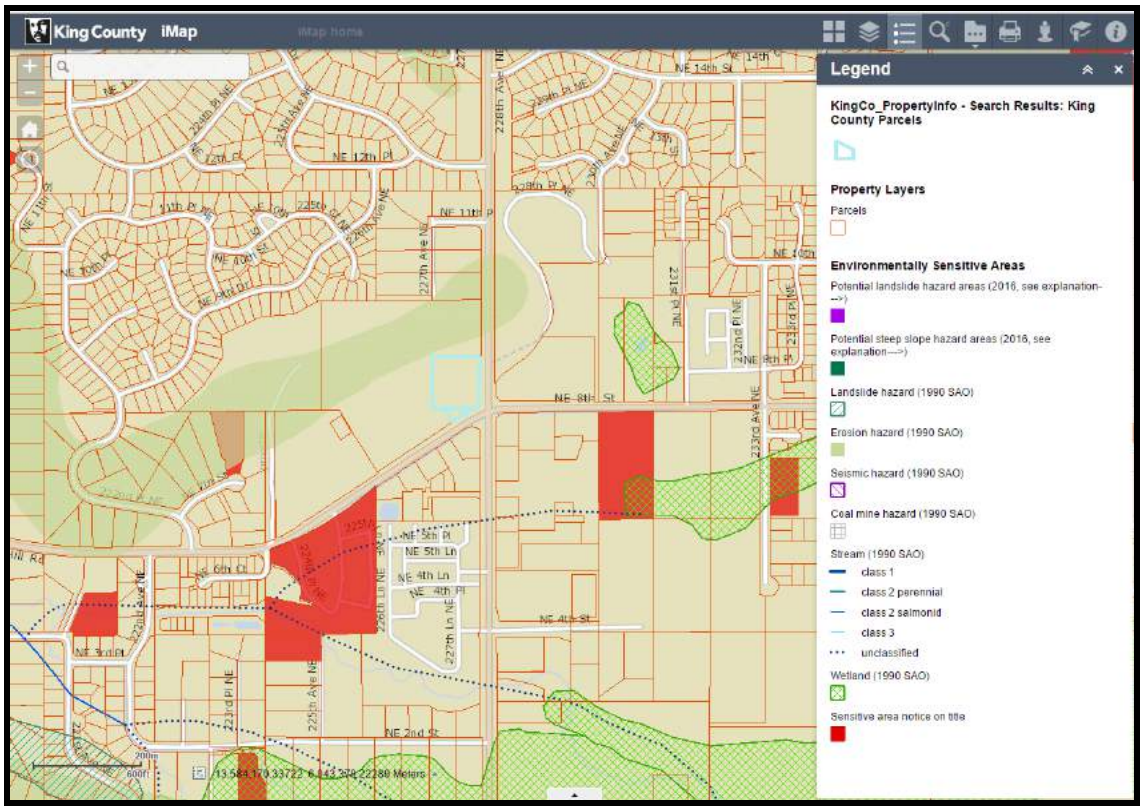

Figure 1: Recreation Center property with environmentally sensitive area overlays

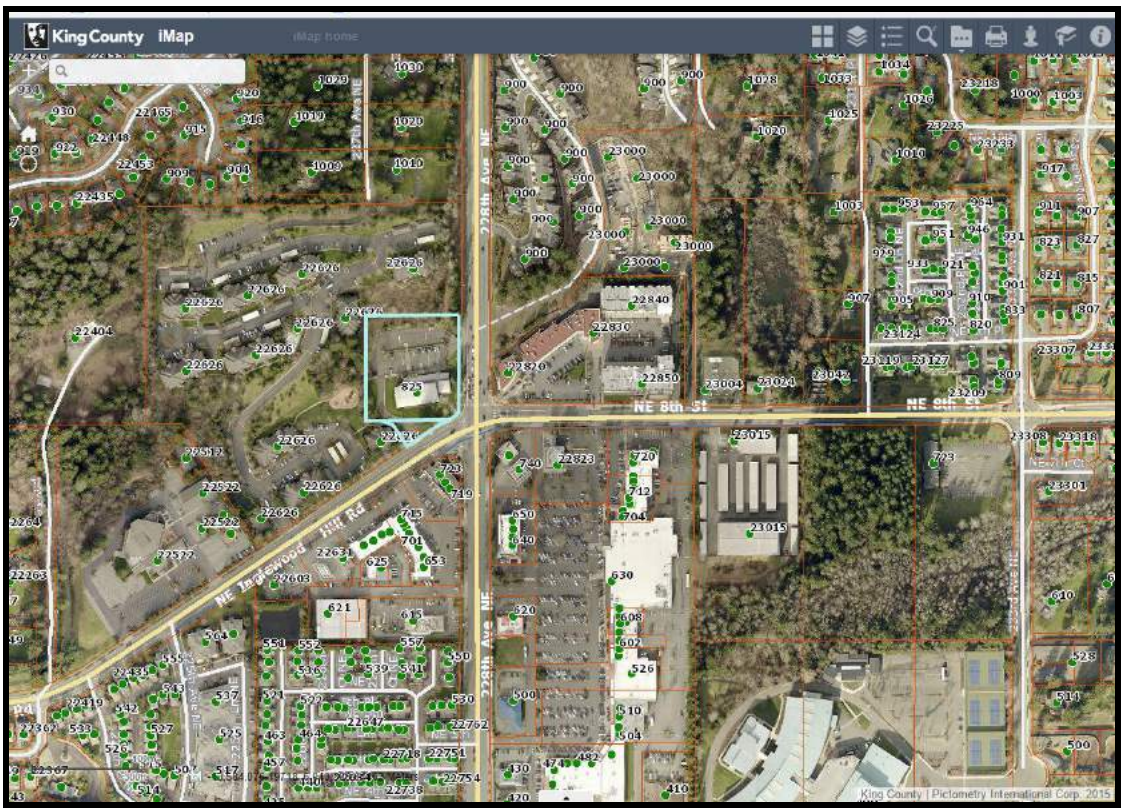

Figure 2: Aerial view of Recreation Center property

Figure 3: Existing Zoning

Exhibit 2

City of Sammamish Washington

Department of Community Development

801 - 228th Ave. SE, Sammamish, WA. 98075 - Phone: 425-295-0500 - Fax: 425-295-0600 - Web: www.sammamish.us

2017 COMPREHENSIVE PLAN DOCKET PROPOSAL #6

TEXT AMENDMENT PROPOSAL

Applicant

City of Sammamish – Department of Public Works

Description of Proposed Amendment and Summary of Applicant Justification

The Department of Public Works proposes to amend the Transportation Element of the City's 2015 Comprehensive Plan. The amendment will provide updates to the City's concurrency project list and update the City's Traffic Impact Fee. The update will include the recently annexed Klahanie Area and incorporate the results of an update to the city's traffic model incorporating the May 2016 traffic counts and the installation of the adaptive traffic signal (ITS) controls along the 228th Avenue corridor. This update will also include all of the new development that has been completed in the city between May 2012 and May 2016. In addition, staff has discovered some information in the 2015 Comprehensive Plan Transportation Element that needs to be updated or revised in order to provide consistency of the information throughout the entire Element. Staff would like to correct all of this information in preparation of Council adoption of a revised Comprehensive Plan Transportation Element during the first half of 2017.

Ability for Staff to Complete Analysis in 2017

The Department of Community Development has the resources to complete a full analysis and recommendation of this proposal, and recommends it for placement on the 2017 Comprehensive Plan docket.

Exhibit 2

City of Sammamish Washington

Department of Community Development

801 - 228th Ave. SE, Sammamish, WA. 98075 - Phone: 425-295-0500 - Fax: 425-295-0600 - Web: www.sammamish.us

2017 COMPREHENSIVE PLAN DOCKET PROPOSAL #7

TEXT AMENDMENT PROPOSAL

Applicant

City of Sammamish – Department of Public Works

Description of Proposed Amendment and Summary of Applicant Justification

The Department of Public Works is currently revising its Storm and Surface Water Management Comprehensive Plan, Surface Water Design Manual, Public Works Standards and Low Impact Development codes. Adoption of these documents by the City Council is planned by the end of 2016. The Department proposes edits to the 2015 Comprehensive Plan to make it consistent with the revised documents and to ensure clarity and consistency throughout our official documents. The City has also created a draft 2017-2022 Surface Water CIP list which needs to be incorporated by reference into the Comprehensive Plan. Staff would like to correct all of this information in preparation for Council adoption during the first half of 2017.

Ability for Staff to Complete Analysis in 2017

The Department of Community Development has the resources to complete a full analysis and recommendation of this proposal, and recommends it for placement on the 2017 Comprehensive Plan docket.

Exhibit 2

City of Sammamish Washington

Department of Community Development

801 - 228th Ave. SE, Sammamish, WA. 98075 - Phone: 425-295-0500 - Fax: 425-295-0600 - Web: www.sammamish.us

2017 COMPREHENSIVE PLAN DOCKET PROPOSAL #8

TEXT AMENDMENT PROPOSAL

Applicant

Mary Wictor

Description of Proposed Amendment and Summary of Applicant Justification

The applicant proposes amending several sections of the Environment & Conversation background information section of the Comprehensive Plan. The proposed changes include the following:

- Amend the Special Overlays and Districts map on page EC.9 to include Landslide Hazard areas
- Amend the Drainage Subbasin Delineation map on page EC.10 to include the Zackuse and mid-Monohan subbasins
- Amend final paragraph on page EC.11 to include Zackuse Creek as a "stream of special significance"
- Amend second paragraph on page EC.13 to reflect newly adopted Stormwater Management Comprehensive Plan

Ability for Staff to Complete Analysis in 2017

The Department of Community Development has the resources to complete a full analysis and recommendation of this proposal, and recommends it for placement on the 2017 Comprehensive Plan docket.

Exhibit 2

City Council Agenda Bill

Meeting Date: December 6, 2016 **Date Submitted:** November 21, 2016

Originating Department: Community Development

Clearances:

- ☑ Attorney
- ☑ Community Development
- ☐ Public Safety
- ☐ Admin Services
- ☐ Finance & IT
- ☐ Public Works
- ☑ City Manager
- ☐ Parks & Recreation

Subject: Comprehensive Plan Housing Element – Compliance with GMHB Order

Action Required: Adopt Ordinance

Exhibits:
1. Ordinance
2. Compliance Memo
3. Housing Element Strike Through

Budget: General Fund $77,000 – Legal Department & Community Development Department

Summary Statement:
The City Council will complete second reading and adopt an Ordinance for proposed changes to the Housing Element of the City's Comprehensive Plan that are required in order to comply with the Growth Management Hearing Board's Final Decision and Order in Case 15-3-0017.

Background:
In compliance with the Growth Management Act ("GMA") periodic update cycle (pursuant to RCW 36.70A.130), the City adopted Ordinance O2015-396 on October 13, 2015, updating the Comprehensive Plan. On December 15, 2015 the Ordinance, as related to the Comprehensive Plan Housing Element, was challenged by a property owner. Following a hearing on the merits, the Growth Management Hearings Board ("GHMB") issued a Final Decision and Order ("Order") on June 13, 2016, that concluded the following:

- Sammamish Ordinance O2015-396 fails to make adequate provisions for existing and projected needs for all economic segments of the community, contrary to RW 36.70A.070(2) and RCW 36.70A.020(4); and
- The challenged Housing Element is inconsistent with the Countywide Planning Policies for King County (KCCPPs) because Ordinance O2015-396 failed to address the City's "share" of countywide housing needs, contrary to RCW 36.70A.100 and RCW 36.70A.210(1)

The GMHB remanded Ordinance O2015-396 to the City of Sammamish to take further actions to comply with the GMA. The City must comply with and respond to the Order by December 9, 2016.

To comply with the Order, the City contracted with 3 Square Blocks (the primary consultant for the 2015 Comprehensive Plan update) to develop revisions to the Housing Element that would bring the City into compliance with the Order. The consultant team, working with ARCH, delivered the following summarized recommendations on August 23, 2016:

1. Expand on the existing housing affordability standards discussion in the Housing Element to include a summary of the 2012 King County Countywide Planning Policies (KCCPPs) guidance regarding the role of cities in helping to meet the countywide need for affordable housing and an estimate of countywide affordable housing need proportionate to City of Sammamish growth targets.
2. Amend goals and policies to clarify and strengthen the City's commitment to meeting its responsibilities in helping to meet countywide affordable housing needs.

The consultant team's "Compliance Memo" (Exhibit 2) provides analysis supporting these proposed changes to the Housing Element. The memo further outlines specific revisions to goal and policy language in the remanded Housing Element to bring this Element into compliance with the GMA and KCCPPs in accordance with the Order. In the majority of instances, the revised language is based on text from an earlier draft Housing Element recommended by the Planning Commission to the City Council during the 2015 Update process. Generally, the changes proposed for compliance with the Order focus on measures to ensure that the county-wide need is addressed, support regional coordination, and provide for monitoring.

The Planning Commission completed a study session on October 20, 2016, and a Public Hearing on October 27, 2016. After the completion of the Public Hearing, the Planning Commission voted 4-0 to recommend the City Council adopt changes to the Housing Element of the Comprehensive Plan as recommended in Exhibit 2 – "Compliance Memo" and shown in Exhibit 3 – "Housing Element Strike Through".

The City Council completed a study session on November 8, 2016. A Public Hearing and first ordinance reading was completed on November 15, 2016. No questions were raised and no amendments were proposed during first ordinance reading.

Financial Impact:
From December 2015 through September 2016, the City has spent approximately $77,000, not including City staff time, on defending the appeal of the 2015 Comprehensive Plan update to the GMHB as well as compliance efforts with the Order issued by the GMHB. City staff has spent approximately 100 hours to date on this matter.

Recommended Motion:
Move to adopt the Ordinance included as Exhibit 1 to amend the Housing Element of the City's Comprehensive Plan with the intent of achieving compliance with the Washington State Growth Management Act pursuant to the Growth Management Hearing Board's Final Decision and Order in Case 15-3-0017.

Exhibit 1

CITY OF SAMMAMISH
WASHINGTON

ORDINANCE NO. O2016-

AN ORDINANCE OF THE CITY OF SAMMAMISH, WASHINGTON, AMENDING THE HOUSING ELEMENT OF THE CITY OF SAMMAMISH COMPREHENSIVE PLAN.

WHEREAS, the City of Sammamish plans under Chapter 36.70A RCW, the Growth Management Act ("GMA"), which requires cities to adopt a comprehensive plan that is consistent with the GMA and with county and regional planning policies;

WHEREAS, the City Council initially adopted the City's Comprehensive Plan in 2003 by Ordinance O2003-130, and has adopted various subsequent revisions; and

WHEREAS, RCW 36.70A.130 requires each city and county planning under the GMA to periodically review and, if needed, revise its comprehensive plan and development regulations to ensure ongoing compliance with the GMA; and

WHEREAS, the City Council updated the Sammamish Comprehensive Plan in accordance with RCW 36.70A.130 on October 26, 2015 ("2015 Comprehensive Plan") by adopting Ordinance O2015-396; and

WHEREAS, Ordinance O2015-396 was appealed to the Growth Management Hearings Board (the "GMHB") on December 15, 2015, under the provisions of the GMA (the "Appeal"); and

WHEREAS, after a hearing on the merits of the Appeal, the GMHB issued a Final Decision and Order ("Order") concluding that the Housing Element of the 2015 Comprehensive Plan does not "make adequate provisions for existing and projected needs for all economic segments of the community," contrary to RCW 36.70A.070(2) and RCW 36.70A.020(4); and

WHEREAS, the GMHB also concluded that the Housing Element is inconsistent with the King County Countywide Planning Policies (CPPs) because it does not "address the City's 'share' of countywide housing needs," contrary to RCW 36.70A.100 and RCW 36.70A.210(1); and

WHEREAS, the GMHB remanded Ordinance O2015-396 to the City and gave the City a deadline of December 9, 2016 to bring the Housing Element in compliance with the cited provisions of the GMA; and

WHEREAS, RCW 36.70A.130(b) permits the City to revise its comprehensive plan outside of the annual docket cycle when necessary to comply with an order of the GMHB; and

DRAFT

WHEREAS, City staff has coordinated with planning and housing consultants to prepare amendments to the Housing Element to address the compliance issues found in the GMHB's Order (the "Housing Element Amendments"); and

WHEREAS, on September 27, 2016, the City submitted the Housing Element Amendments to the Washington State Department of Commerce in accordance with RCW 36.70A.106; and

WHEREAS, an environmental review of the 2015 Comprehensive Plan was conducted in accordance with the requirements of the State Environmental Policy Act (SEPA), and the SEPA checklist for the 2015 Comprehensive Plan included Attachment B.3, *Housing Issue Paper*, which analyzed the potential environmental impacts associated with policy language in the Housing Element; and

WHEREAS, on January 22, 2015, a SEPA threshold determination of non-significance was issued for the 2015 Comprehensive Plan (the "2015 DNS"), and no appeals of the 2015 DNS were filed; and

WHEREAS, the City has performed a review of the 2015 DNS and determined that the Housing Element Amendments fall within the analysis provided therein; and

WHEREAS, on October 21, 2016, the City adopted the 2015 DNS for the Housing Element Amendments in accordance with WAC 197-11-600(2), and published a legal advertisement in the *Seattle Times* notifying the public of the opportunity to provide comment on such action; and

WHEREAS, on October 20, 2016, the Planning Commission conducted a work session to discuss the proposed Housing Element Amendments; and

WHEREAS, on October 27, 2016, the Planning Commission held a public hearing on the proposed Housing Element Amendments, considered public comment, and made a recommendation of approval to the City Council; and

WHEREAS, on November 8, 2016, the City Council conducted a work session to discuss the proposed Housing Element Amendments; and

WHEREAS, on November 15, 2016, the City Council held a public hearing on the proposed Housing Element Amendments in order to provide further opportunity for public comment and participation; and

WHEREAS, the City Council has considered the relevant provisions of the GMA and determined that the proposed Housing Element Amendments comply with said provisions and satisfy the GMHB Order;

NOW, THEREFORE, THE CITY COUNCIL OF THE CITY OF SAMMAMISH, WASHINGTON, DO ORDAIN AS FOLLOWS:

Section 1. Sammamish Comprehensive Plan Housing Element, Amended. The Housing Element of the Sammamish Comprehensive Plan is hereby amended as shown in **Attachment A**, which is attached hereto and incorporated by this reference.

Section 2. Severability. Should any section, paragraph, sentence, clause or phrase of this Ordinance, or its application to any person or circumstance, be declared unconstitutional or otherwise invalid for any reason, or should any portion of this Ordinance be pre-empted by state or federal law or regulation, such decision or pre-emption shall not affect the validity of the remaining portions of this Ordinance or its application to other persons or circumstances.

Section 3. Effective Date. This Ordinance shall be published in the official newspaper of the City, and shall take effect and be in full force five (5) days after the date of publication.

ADOPTED BY THE CITY COUNCIL AT A REGULAR MEETING THEREOF ON THE ___ DAY OF DECEMBER, 2016.

CITY OF SAMMAMISH

_____
Mayor Donald J. Gerend

ATTEST/AUTHENTICATED:

_____
Melonie Anderson, City Clerk

Approved as to form:

_____
Michael R. Kenyon, City Attorney

Filed with the City Clerk:	November 9, 2016
Public Hearing:	November 9, 2016
First Reading:	November 15, 2016
Passed by the City Council:	
Date of Publication:	
Effective Date:	

DRAFT

Exhibit 1

Exhibit 2

Memorandum

Date: August 23, 2016

To: Jeff Thomas, Planning Director

From: Deborah Munkberg, 3 Square Blocks

Cc: Arthur Sullivan, ARCH
Joe Tovar, Tovar Planning

Re: Sammamish Comprehensive Plan Housing Element Review

I. INTRODUCTION

Following a challenge relating to the Sammamish Comprehensive Plan Housing Element, the Growth Management Hearings Board issued a Final Decision and Order[1] with the following conclusions:

- Sammamish Ordinance O2015-396 fails to make adequate provisions for existing and projected needs for all economic segments of the community, contrary to RW 36.70A.070(2) and RCW 36.70A.020(4).
- The challenged Housing Element is inconsistent with the Countywide Planning Policies for King County [KCCPPs] because Ordinance O2015-396 failed to address the City's "share" of countywide housing needs, contrary to RCW 36.70A.100 and RCW 36.70A.210(1).

Based on discussions with City staff and the consultant team, this memo describes potential additions and revisions to the Sammamish Comprehensive Plan to address these findings and specifically recommends the following:

1. Expand on the existing housing affordability standards discussion in the Housing Element to include a summary of the 2012 King County Countywide Planning Policies (CPP) guidance regarding the role of cities in helping to meet the countywide need for affordable housing and an estimate of countywide affordable housing need proportionate to City of Sammamish growth targets. See discussion in Section II of this memo.
2. Amend goals and policies, as described in Section III of this memo, to clarify and strengthen the City's commitment to meeting its responsibilities in helping to meet countywide affordable housing needs.

II. COUNTYWIDE AFFORDABLE HOUSING NEED

The adopted Housing Element background section consists primarily of the East King County Housing Analysis (Housing Analysis), prepared by ARCH and dated 1/27/2015. The Housing Analysis is comprised of four major sections: 1) discussion of regional and county-level planning policies for housing; 2) demographic and workforce analysis that help define demand for housing; 3) housing supply, including type and affordability; and 4) comparison of demand with existing and project housing supply.

[1] Washington Growth Management Hearings Board, Case No. 15-3-0017. Final Decision and Order. June 13.2016.

The discussion below builds from the Housing Analysis, providing a discussion of the policy context established by the GMA and King County CPPs and a quantitative estimate of the City's share of countywide housing needs in accordance with the CPPs.

Policy Context

Washington Growth Management Act

The GMA establishes that, among other requirements, a comprehensive plan housing element must make provisions for existing and projected needs of all economic segments of the community (RCW 36.70A.070(2)). The GMA also requires that comprehensive plans are consistent with policy guidance established through the countywide planning policies (RCW 36.70A.100 and RCW 35.70A.201(1)).

King County Countywide Planning Policies

The CPPs require each city to adopt policies, strategies, actions, and regulations that promote housing affordability and specifically to address the countywide need for housing affordable to very low-, low-, and moderate-income households.

The CPPs acknowledge that a city cannot guarantee that a given number of units at each affordability level. At the same time, the CPPs recognize that an understanding of countywide need helps to clarify the scope of effort for each jurisdiction.[2] Accordingly, Policy H-1 defines the county-wide need for housing by income is defined as follows:

- 50–80% of AMI[3] (moderate) 16% of total housing supply
- 30–50% of AMI (low) 12% of total housing supply
- 30% and below AMI (very low) 12% of total housing supply

Using this information, cities are encouraged to employ a range of housing tools to ensure the countywide need is addressed. The CPPs recognize that local jurisdictions should tailor their housing policies to address this need based on local circumstances and conditions.[4]

> *The type of policies and strategies that are appropriate for a jurisdiction to consider will vary and will be based on its analysis of housing. Some jurisdictions where the overall supply of affordable housing is significantly less than their proportional share of the countywide need may need to undertake a range of strategies addressing needs at multiple income levels, including strategies to create new affordable housing. Other jurisdictions that currently have housing stock that is already generally affordable may focus their efforts on preserving existing affordable housing through efforts such as maintenance and repair, and ensuring long-term affordability. It may also be appropriate to focus efforts on the needs of specific demographic segments of the population.*[5]

With respect to affordable housing, cities are encouraged to employ a range of housing tools to ensure that the countywide need is addressed and to respond to local conditions. CPP policies identify the following strategies:

- Provide zoning capacity for a range of housing types and densities sufficient to accommodate the city's overall housing target (H-4)

[2] King County Countywide Planning Policies, p. 31. 2012.
[3] King County Area Median Income
[4] King County Countywide Planning Policies, H-8, p. 33. 2012.
[5] King County Countywide Planning Policies, p. 31. 2012.

- Adopt policies, strategies, actions and regulations that promote housing supply, affordability and diversity (H-5)
- Preserve existing affordable housing units and encourage maintenance of existing housing stock (H-6, H-11)
- Identify barriers to affordability and implement strategies to overcome them (H-7)
- Tailor housing policies to local needs, conditions and opportunities (H-8)
- Plan for housing affordability accessible to major employment centers and affordable to the workforce in them (H-9)
- Plan for housing affordability in coordination with plans for transit, bicycle and pedestrian facilities (h-10)

Cities are also expected to work collaboratively to meet the regional affordable housing need. Policy H-14 states "Work cooperatively among jurisdictions to provide mutual support in meeting countywide housing growth targets and affordable housing needs."

Finally, the CPPS emphasize the need to monitor and measure results, stating that cities should "Monitor housing supply, affordability, and diversity, including progress toward meeting a significant share of the countywide need for affordable housing for very-low, low, and moderate income households (H-17)."

Measuring Countywide Affordable Housing Need

As set forth in CPP Policy H-1, the City of Sammamish proportionate share of the countywide affordable housing need is described below. Table 1 summarizes King County household income levels corresponding to 80, 50, and 30 percent of the 2016 HUD estimate of King County median household income for a family of four.

Table 1 King County household (family of 4) income categories

	Median Household Income	80% of Median Household Income (Moderate Income)	50% of Median Household Income (Low Income)	30% of Median Household Income (Very Low Income)
King County	$90,300	$72,250	$45,150	$27,090

Source: U.S Housing and Urban Development, 2016.

Based on the City's housing target of 4,640 units, Table 2 shows the amount of housing affordable needed at each income level to meet a proportionate share of countywide affordable housing demand.

Table 2 City of Sammamish proportionate share of county-wide affordable housing

Annual Household Income	2035 growth target	Countywide need based on income levels	Proportionate share of housing units
Moderate income	4,640 units[6]	16%	742
Low income		12%	557
Very low income		12%	557

Source: 3 Square Blocks, 2016.

Table 2 reflects only needs based on projected growth in the city. It should also be noted that the affordability of existing housing is significantly less than the countywide needs. Specifically, around 2%

[6] Revise growth target based on updated estimate?

of the City's existing housing stock is affordable at up to 50 percent of median income, with a very limited amount affordable at 30 percent of median income, and about 5 percent affordable between 50 percent and 80 percent of median income. This is a much lower proportion than many other cities in East King County. Thus, this approach represents a conservative definition of overall affordability needs. This is relevant in light of guidance provided in the CPPs regarding potential local strategies: *"Some jurisdictions where the overall supply of affordable housing is significantly less than their proportional share of the countywide need may need to undertake a range of strategies addressing needs at multiple income levels, including strategies to create new affordable housing."*

A significant contributing factor to the lack of affordable housing in Sammamish is the low proportion of rental housing. As described in the Comprehensive Plan Housing Analysis, Sammamish has a high home ownership rate of nearly 90% and 2010 average home sales prices that were more than 55% higher than the countywide average. Housing options for very low, low and moderate income households seeking to live in Sammamish are very limited. Households may pay more than 30 percent of their income for housing, look for shared housing opportunities, or look for housing outside the area.

The City and County recognize the importance of providing more affordable housing options in Sammamish. The goals and policies listed in Section II, below, identify the policies, strategies and actions identified by the City to fulfill its role in helping to meet the countywide need for affordable housing in King County.

III. GOALS AND POLICIES

City of Sammamish Comprehensive Plan Housing Element goals and policies identify the City's policy steps to make provisions for housing affordable to all economic segments of the community. For comprehensive planning purposes, community is broadly defined to encompass the larger countywide region surrounding a jurisdiction and both existing and future residents who may seek to live in the community over the next 20 years. Excerpted goals and policies listed below in Table 3 focus on measures to (1) ensure that the countywide need is addressed, (2) support regional coordination and (3) provide for monitoring.

The table contains relevant policies from the adopted Comprehensive Plan and, where applicable, recommended revisions and policy additions. Unless otherwise noted, the recommended revisions and additions are based on text from an earlier draft Housing Element recommended by the Planning Commission to the City Council.

Table 3. Affordable Housing Goals and Policies

Comprehensive Plan Goals and Policies	Recommended Revisions
ADDRESSING THE NEED FOR AFFORDABLE HOUSING	
Goal H.2 *Ensure that Sammamish has a sufficient quantity and variety of housing to meet projected needs, preferences, and growth of the community.*	
Policy H.2.1 *Explore feasible options to accommodate the city's housing growth targets.*	~~*Explore feasible options*~~ *Maintain an adequate supply of appropriately zoned land to accommodate the city's housing growth targets.* ***Rationale:*** *Establishes a stronger commitment to providing capacity for housing growth targets.*[7]

[7] Include graphic showing residential capacity as compared to housing growth targets.

Exhibit 2

Comprehensive Plan Goals and Policies	Recommended Revisions
Policy H.2.2 *Support a variety of residential densities and housing types to meet the needs and preferences of all Sammamish residents.*	
Policy H.2.3 *Consider the impacts on citywide housing capacity and diversity when making land use policy decisions or code amendments.*	
Policy H.2.5 *Support smaller housing types (e.g. cottages, duplexes, efficiency studios, and townhouses) where appropriate, with sensitivity to the quality, design, intensity and character of surrounding land uses.*	*~~Support~~ Permit and promote smaller housing types (e.g. cottages, duplexes, efficiency studios, and townhouses) ~~where appropriate, with sensitivity to the quality, design, intensity and character of surrounding land uses~~.* *Rationale: Provides a stronger commitment to housing diversity. In addition, Goal H.1 and policy H.1.1. already address the deleted language.*
Policy H.2.6 *Support the development of accessory dwelling units (ADUs) in a context-sensitive manner, with specific attention to tree preservation.*	*Policy H.2.6* *~~Support~~ Promote the development of accessory dwelling units (ADUs) ~~in a context-sensitive manner, with specific attention to tree preservation~~.* *Rationale: Provides a stronger commitment to housing diversity. In addition, Goal H.1 and policies H.1.1. and LU 6.2 already address the deleted language.*
Policy H.2.8 *Adopt regulations and procedures consistent with the goal of minimizing unnecessary costs and time delays. This objective should be balanced with maintaining opportunities for public involvement and review, public safety, protection of the environment and other explicitly stated city policies consistent with other Comprehensive Plan direction.*	*~~Adopt regulations and procedures consistent with the goal of minimizing unnecessary costs and time delays. This objective should be balanced with maintaining opportunities for public involvement and review, public safety, protection of the environment and other explicitly stated city policies consistent with other Comprehensive Plan direction.~~* *Avoid creating regulations and procedures that discourage the housing industry's ability to respond to market needs or unnecessarily increase the costs of developing housing.* *Rationale: Provides a stronger commitment to reducing barriers to affordable housing. In addition, deleted language is addressed in multiple other Comprehensive Plan policies.*
Goal H.3 *Provide for a range of housing opportunities to address the needs of all economic segments of the community.*	*The phrase "and preferences" was added to this policy by the City Council. As stated, this phrase is ambiguous and should be clarified or deleted.*

Exhibit 2

Comprehensive Plan Goals and Policies	Recommended Revisions
No comparable policy; recommend addition of policy text as recommended by Planning Commission	*Develop and implement[8] plans and strategies that promote a proportionate amount of the countywide need for housing affordable to households with moderate, low and very low incomes, including those with special needs.* *Rationale: Provides explicit commitment to plans and strategies for a proportionate share of countywide need for affordable housing*
H.3.2 *Encourage modifications to existing housing in order to preserve or increase affordable housing opportunities.*	*~~Encourage modifications to~~ Promote the preservation of existing housing ~~in order to preserve or increase affordable housing opportunities~~ which may provide for affordable forms of rental and ownership housing.[9]* *Rationale: Emphasizes preservation rather than modification and clarifies intent.*
H.3.3 *Consider incentivizing affordable housing when evaluating rezones and other land use regulation modifications, especially when resulting in increases in development capacity.*	*Consider requiring or incentivizing affordable housing when evaluating rezones and other land use regulation modifications, especially when resulting in increases in development capacity.* *Rationale: Establishes stronger policy language, consistent with existing regulations for the Town Center.*
Policy H.3.4 *Offer regulatory incentives such as priority processing of permits, fee waivers or reductions, and/or property tax relief for builders who provide very low-, low- or moderate-income housing or buildings/developers providing housing for demographics needs, such as seniors, singles and two person households.*	
H.3.5 *Consider offering financial aid and/or technical assistance to organizations that provide affordable housing for very low-, low- and moderate-income households.*	
Policy H.3.6 *Support efforts to provide on a region-wide basis social services and housing affordable to households at less than 30% of area median income (very low-income), including collaboration with other jurisdictions and funders.*	*~~Support efforts to provide on a region-wide basis social services and housing affordable to households at less than 30% of area median income (very low-income), including collaboration with other jurisdictions and funders.~~* *Encourage and support non-profit agencies, public-private partnerships, and housing authorities to preserve or build new, sustainable housing affordable to very low-, low- and moderate-income households.*

[8] The phrase "and implement" is a proposed addition to the Planning Commission recommended policy.
[9] Language is based on prior Comprehensive Plan HP-18.

Exhibit 2

Comprehensive Plan Goals and Policies	Recommended Revisions
	Address the need for housing affordable to households at less than 30% AMI (very low-income), and given the unique challenges of serving this need, local efforts will require collaboration with other jurisdictions and funders. *Rationale: Clarifies policy intent on two different points. The first is to support efforts by non-profits to create affordable housing and the second is to acknowledge the challenges and need for collaboration in order to serve very low-income households.*
Policy H.3.7 *Support affordable rental and ownership housing that is context-sensitive throughout the city especially in areas with good access to transit, employment, education and shopping.*	*Support affordable rental and ownership housing ~~that is context-sensitive~~ throughout the city especially in areas with good access to transit, employment, education and shopping.* *Rationale: Clearer statement of policy intent. Goal H.1 and policy H.1.1. already address the deleted language.*
Policy H.3.8 *Ensure that affordable housing achieved through public incentives or assistance remains affordable for the longest possible term.*	
Policy H.3.9 *Maintain a record of publicly owned land, and if land is determined to be surplus for public purposes and is suitable for housing, consider its use for affordable housing along with other alternative public benefit uses.*	*Maintain a record of publicly owned land, and if land is determined to be surplus for public purposes and is suitable for housing, give priority for its use for affordable housing ~~along with other alternative public benefit uses~~ with a preference for housing for low-income and very-low income households.* *Rationale: Stronger commitment, specifically addresses low- and very-low income household needs*
Goal 4 *No comparable policy; recommend addition of policy text as recommended by Planning Commission*	*Support public and private housing and services for people who are homeless.* *Rationale: Explicitly address the needs of the homeless*
WORKING IN COLLABORATION TO MEET REGIONAL HOUSING NEEDS	
Goal H.5 *Actively participate and coordinate with other agencies in efforts to meet regional housing needs.*	
Policy H.5.1 *Support the development of region-wide plans for housing affordable to households with moderate, low and very low incomes, including those with special needs.*	
Policy H.5.2	

Comprehensive Plan Goals and Policies	Recommended Revisions
Support a coordinated regional approach to homelessness by supporting public and private housing and services for people who are homeless and work with other jurisdictions and health and social service organizations, including faith-based and other non-profit organizations, to develop a coordinated, regional approach to homelessness.	
MONITORING PROGRESS	
Goal H.6 *Implement Housing Element goals in a manner that is efficient and transparent.*	*Implement Housing Element goals in a manner that is effective, efficient and transparent.*[10] *Rationale: Strengthens emphasis of goal on implementation.*
Policy H.6.1 *No comparable policy; recommend addition of policy text as recommended by Planning Commission*	*Adopt a Housing Strategy Plan to outline benchmarks, steps and milestones toward implementation of this Housing Element.*[11] *Rationale: Commitment to strategies and actions for affordable housing.*
Policy H.6.3 *Monitor regional housing supply and type with an eye toward affordability and availability for all income levels, age categories, seniors and special needs populations.*	*Monitor housing supply, type ~~with an eye toward~~ and affordability ~~and availability for all income levels, age categories, seniors and special needs populations~~, including measureable*[12] *progress toward meeting a significant share of the countywide need for affordable housing for very low-, low-, and moderate-income households.* *Rationale: Commitment to progress toward meeting share of countywide need for affordable housing*
Policy H.6.4 *As needed, reassess and adjust policies and strategies to meet local housing needs.*	*~~As needed,~~ On a regular basis, based on results of monitoring local data and effectiveness of local regulations and programs, reassess and adjust policies and strategies to meet local housing needs.* *Rationale: Stronger commitment to assessment and adjustment of policies and strategies*

[10] "Effective" is a proposed addition to the Planning Commission recommended language.
[11] The terms "benchmarks" and "and milestones" are proposed additions to the Planning Commission recommended policy.
[12] "Measurable" is a proposed addition to the Planning Commission recommended policy.

Exhibit 3

HOUSING

home in the pines —
my neighbor waves
across the fence

Painting by Anna Macrae
Haiku by Michael Dylan Welch

Exhibit 3

Housing Goals

Goal H.1 **Neighborhood Vitality and Character**
Promote safe, attractive, and vibrant residential and mixed-use neighborhoods. Encourage housing design that is sensitive to quality, design, and intensity within neighborhoods and with surrounding land uses. Land use policies and regulations should emphasize compatibility with existing neighborhood character. In areas where the existing character is in transition, new development should be designed to incorporate the qualities of well-designed neighborhoods.

Goal H.2 **Housing Supply and Variety**
Ensure that Sammamish has a sufficient quantity and variety of housing to meet projected needs, preferences, and growth of the community.

Goal H.3 **Housing Affordability**
Provide for a range of housing opportunities to address the needs ~~and preferences~~ of all economic segments of the community.

Goal H.4 **Housing for People with Special Needs**
Support a variety of housing opportunities to serve those with special needs.

Goal H.5 **Regional Collaboration**
Actively participate and coordinate with other agencies in efforts to meet regional housing needs.

Goal H.6 **Monitoring**
Implement Housing Element goals in a manner that is effective, efficient and transparent.

Exhibit 3

home in the pines —
my neighbor waves
across the fence

HOUSING

Introduction

The Housing Element addresses the preservation, improvement, and development of housing, identifies land to accommodate different housing types, and makes provisions for the existing and projected housing needs of all economic segments of the community. Sammamish's housing element ensures that there will be enough housing to accommodate expected growth in the city, and the variety of housing necessary to accommodate a range of income levels, ages and special needs. At the same time, the element seeks to preserve existing neighborhood character by including policies that will keep new development compatible.

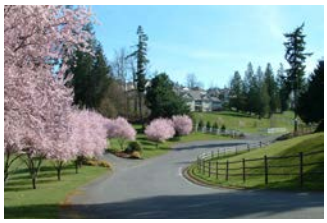

Lancaster Ridge

Multifamily housing

The Housing Element is supported by a housing needs analysis, which quantifies existing and projected housing needs and identifies the number of housing units necessary to accommodate projected growth. This analysis prompts the City to consider what current and future residents will need, and this in turn informs policies that shape the zoning and development standards in place today and planned for the future. This is an element in which multiple interests need to be balanced, including community character, demographic characteristics, affordability, and others. This analysis is contained in the Housing Element Background Information. Specifically, the

Housing Element Background Information contains the *East King County Housing Needs Analysis*, beginning on page H.3, prepared by ARCH (A Regional Coalition for Housing), in collaboration with the participating cities. The Housing Needs Analysis, dated January 27, 2015, includes a review of demographics, household characteristics, housing supply and summary findings for both the East King County area and the City of Sammamish. The Housing Element Background Information also includes the February 2, 2006 Planning Commission Recommended Draft City of Sammamish Housing Strategy Plan, which identifies recommended actions to implement the Housing Element of the 2003 Comprehensive Plan.

To accomplish aims of this Element, the City will develop a shorter range Strategy Plan that lists potential strategies to implement various goals and policies and their relative priority for consideration. In addition, the results of activities undertaken through the Strategy Plan will facilitate performance monitoring, evaluation, and future planning updates.

Please look for this icon for goals and policies that focus specifically on sustainability and healthy communities.

Goals and policies that support housing sustainability and healthy communities address energy efficiency.

Goals and Policies

Single family homes

Townhomes

Goal H.1 Neighborhood Vitality and Character

Promote safe, attractive, and vibrant residential and mixed-use neighborhoods. Encourage housing design that is sensitive to quality, design, and intensity within neighborhoods and with surrounding land uses. Land use policies and regulations should emphasize compatibility with existing neighborhood character. In areas where the existing character is in transition, new development should be designed to incorporate the qualities of well-designed neighborhoods.

Policy H.1.1 *Ensure new development and redevelopment is sensitive to the context of existing and planned neighborhood character.*

Exhibit 3

Policy H.1.2 *Support investment in existing neighborhoods and housing in order to preserve the character and condition of neighborhoods and housing.*

Policy H.1.3 *Support the preservation of the city's historically significant housing.*

Policy H.1.4 *Provide notification and foster public awareness and participation in decisions affecting neighborhoods.*

Goal H.2 Housing Supply and Variety

Ensure that Sammamish has a sufficient quantity and variety of housing to meet projected needs, preferences, and growth of the community.

Policy H.2.1 *~~Explore feasible options~~ Maintain an adequate supply of appropriately zoned land to accommodate the city's housing growth targets.*

Policy H.2.2 *Support a variety of residential densities and housing types to meet the needs and preferences of all Sammamish residents.*

Policy H.2.3 *Consider the impacts on citywide housing capacity and diversity when making land use policy decisions or code amendments.*

Policy H.2.4 *Support residential and mixed use development in Town Center and other commercial areas where combining such uses would promote the vitality and economic viability of the area.*

Policy H.2.5 *~~Support~~ Permit and promote smaller housing types (e.g. cottages, duplexes, efficiency studios, and townhouses)~~ where appropriate, with sensitivity to the quality, design, intensity and character of surrounding land uses~~.*

Policy H.2.6 *~~Support~~ Promote the development of accessory dwelling units (ADUs)~~ in a context sensitive manner, with specific attention to tree preservation~~.*

Policy H.2.7 *Permit manufactured homes in residential zones in accordance with the provisions of state and federal law.*

Based on the assumptions described in the Land Use Element, the City has development capacity to meet the adopted 2035 targets of 4,640 houses and 2,088 jobs.

Multifamily housing

Neighborhood within easy walking distance of Eastlake High School, local transit and Sammamish Highlands

Urban infill *is defined as new development that is sited on vacant or undeveloped land within an existing community, and that is enclosed by other types of development. The term "urban infill" itself implies that existing land is mostly built-out and what is being built is in effect "filling in" the gaps. The term most commonly refers to building single-family homes in existing neighborhoods but may also be used to describe new development in commercial, office or mixed-use areas.*

Fair Housing *is the ability for all people to choose where they live without discrimination based on race, color, national origin, sex, family status, or disability—these are the "protected classes" under state and federal law. (Some places also protect age, sexual orientation, or having a Section 8 voucher). Cities may not make zoning or land use decisions or implement policies that exclude or otherwise discriminate against protected persons, including individuals with disabilities. Sammamish's fair housing practices are evaluated periodically by King County as part of a countywide report to the federal government.*

Location-efficient Housing *refers to homes that have easy or inexpensive access to workplaces, schools, shopping, and other necessary destinations. Housing locations are efficient to the most people when the ways to these destinations are easily walkable, don't require the resident to own an automobile, and can be reached in 20 minutes or less.*

New housing development under construction

Policy H.2.8 ~~*Adopt regulations and procedures consistent with the goal of minimizing unnecessary costs and time delays. This objective should be balanced with maintaining opportunities for public involvement and review, public safety, protection of the environment and other explicitly stated city policies consistent with other Comprehensive Plan direction.*~~ *Avoid creating regulations and procedures that discourage the housing industry's ability to respond to market needs or unnecessarily increase the costs of developing housing.*

Policy H.2.9 *Permit context-sensitive residential clustering, where appropriate, as a means of protecting environmentally sensitive areas and providing more open space.*

Policy H.2.10 *Promote minimum densities in commercial zones that allow housing to achieve mixed-use development.*

Policy H.2.11 *Ensure fair and legal housing practices throughout the city.*

Policy H.2.12 *Promote location-efficient and energy-efficient housing choices through incentives and other means.*

Exhibit 3

Goal H.3 Housing Affordability

Provide for a range of housing opportunities to address the needs ~~and preferences~~ of all economic segments of the community.

Multifamily housing

Policy H.3.1 *Develop and implement plans and strategies that promote a proportionate amount of the countywide need for housing affordable to households with moderate, low and very low incomes, including those with special needs.*

Policy H.3.2 ~~*Encourage modifications to*~~ *Promote the preservation of existing housing* ~~*in order to preserve or increase affordable housing opportunities*~~ *which may provide for affordable forms of rental and ownership housing*.

Policy H.3.3 *Consider requiring or incentivizing affordable housing when evaluating rezones and other land use regulation modifications, especially when resulting in increases in development capacity.*

Single family homes

Policy H.3.4 *Offer regulatory incentives such as priority processing of permits, fee waivers or reductions, and/or property tax relief for builders who provide very low-, low- or moderate-income housing or buildings/developers providing housing for demographics needs, such as seniors, singles and two person households.*

Multifamily housing

Policy H.3.5 *Consider offering financial aid and/or technical assistance to organizations that provide affordable housing for very low-, low- and moderate-income households.*

Policy H.3.6 ~~*Support efforts to provide on a region-wide basis social services and housing affordable to households at less than 30% of area median income (very low-income), including collaboration with other jurisdictions and funders.*~~ *Encourage and support non-profit agencies, public-private partnerships, and housing authorities to preserve or build new, sustainable housing affordable to very low-, low- and moderate-income households.*

Given the unique challenges of providing housing affordable to households at less than 30% AMI (very low-income), local efforts will require collaboration with other jurisdictions and funders.

Low-density development

Area Median Income (AMI)

Housing Affordability

Growth Management Act Context

Comprehensive Plan Requirements. The Growth Management Act requires that comprehensive plan housing elements contain an inventory and analysis of projected housing needs to manage projected growth, provide a statement of goals and policies for the preservation, improvement and development of housing, identify sufficient land for housing, and make adequate provisions for existing and projected needs of all economic segments of the community.

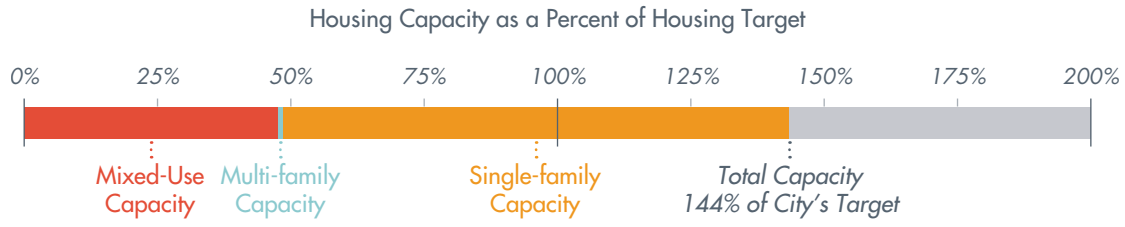

Source: East King County Housing Analysis, January 27, 2015

As shown in the bar chart above, the City of Sammamish has demonstrated sufficient land for housing, with a housing capacity of 144% of the City's housing target. Given the cost of single family housing, and because mixed use and multifamily housing types are typically more affordable than single-family, detached housing, the City recognizes the importance of having sufficient zoned capacity for multi-family and Town Center mixed use residential development in order to meet affordability needs. As shown above, approximately 50 percent of the City's capacity was in either multi-family or mixed use residentially zoned land. This is an important element in the City's overall approach to providing for affordable housing in Sammamish.

Countywide Planning Requirements. The King County Countywide Planning Policies (CPPs), in addition to reaffirming the GMA housing goals, require all cities to share the responsibility for achieving the goal of an equitable distribution of affordable housing in King County. Through the CPPs, cities in King County have agreed that housing in each community should reflect the existing countywide mix of household income. The CPPs define the county-wide need for housing by income as follows:

- 50–80% of AMI (moderate) 16% of total housing supply
- 30–50% of AMI (low) 12% of total housing supply
- 30% and below AMI (very low) 12% of total housing supply

Currently the supply of existing affordable housing for lower incomes households is less than existing needs both countywide and in many cities, especially for very low income households. Sammamish has only about 2 percent of the City's existing housing stock affordable at up to 50 percent of median income, and about 5 percent affordable between 50 percent and 80 percent of median income. This is a much lower proportion than most other cities countywide and in East King County.

Exhibit 3

The CPPs encourage cities to employ a range of housing tools to address the countywide need and recognize that local jurisdictions should tailor their housing policies based on local circumstances and conditions. Cities are also expected to work collaboratively to meet the regional affordable housing need and to monitor and measure results.

Measuring Countywide Affordable Housing Need

These charts help to illustrate the estimated City of Sammamish proportionate share of the countywide affordable housing need resulting from new growth. The chart at right summarizes King County household income levels corresponding to 80, 50, and 30 percent of the 2016 HUD estimate of King County median household income. Based on the City's housing target of 4,640 units, the pie chart below shows the amount of affordable housing needed at each income level to meet a proportionate share of countywide affordable housing demand.

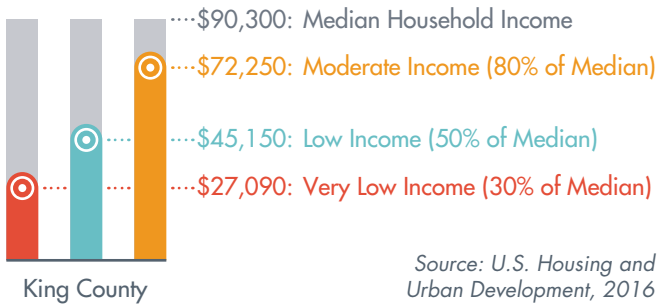

Source: U.S. Housing and Urban Development, 2016

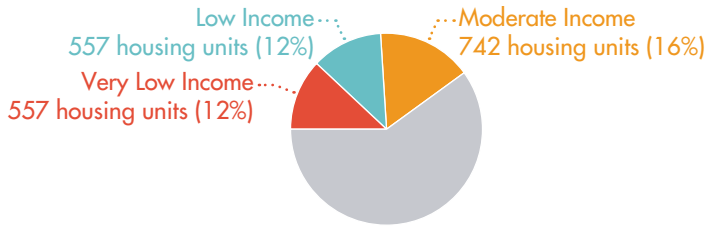

City of Sammamish Proportionate Share of County-wide Affordable Housing Resulting from New Growth
(2035 growth target = 4,640 units)

Recognizing that Sammamish has a lower proportion of affordable housing than other cities in East King County, the City will continue to work toward fulfilling its role in meeting the countywide need for affordable housing in King County. The goals and policies in this Housing Element specifically identify the policies, strategies and actions identified by the City to address this goal.

Special needs housing *in this plan includes homes suitable for and occupied by people with one or more self-help limitations, such as physical or mental disability, long-term illness, or alcohol or drug issues. The housing may or may not incorporate supportive services, and may be permanent or transitional. Examples include adult family homes, assisted living facilities, and group homes for people with developmental disabilities.*

Universal design *refers to a broad spectrum of ideas meant to produce products, buildings, or other built environments that are usable to the greatest extent possible by everyone, regardless of their age, ability, or status in life. Wheelchair ramps, essential for people in wheelchairs but also used by all, are a common example. There are also cabinets with pull-out shelves, kitchen counters at several heights to accommodate different tasks and postures, and low-floor buses that "kneel" (bring their front end to ground level, rather than on-board lifts).*

Policy H.3.7 *Support affordable rental and ownership housing ~~that is context sensitive~~ throughout the city especially in areas with good access to transit, employment, education and shopping.*

Policy H.3.8 *Ensure that affordable housing achieved through public incentives or assistance remains affordable for the longest possible term.*

Policy H.3.9 *Maintain a record of publicly owned land, and if land is determined to be surplus for public purposes and is suitable for housing, consider its use for ~~to~~ affordable housing ~~along with other alternative public benefit uses~~ with a preference for housing for low-income and very-low income households.*

Goal H.4 Housing for People with Special Needs

Support a variety of housing opportunities to serve those with special needs.

Policy H.4.1 *Support ways for older adults and people with disabilities to remain in the community as their housing needs change by encouraging universal design or retrofitting homes for lifetime use.*

Policy H.4.2 *Support a range of housing types for seniors; e.g., adult family homes, skilled nursing facilities, assisted living and independent living communities.*

Policy H.4.3 *Ensure development regulations allow for and have suitable provisions to accommodate housing opportunities for special needs populations in Sammamish.*

Policy H.4.4 *Encourage the geographic distribution of special needs housing throughout the city, understanding that some clustering of such housing may be appropriate if proximity to public transportation, employment opportunities, medical facilities or other services is necessary.*

Policy H.4.5 *Support public and private housing and services for people who are homeless.*

Goal H.5 Regional Collaboration

Actively participate and coordinate with other agencies in efforts to meet regional housing needs.

Policy H.5.1 *Support the development of region-wide plans for housing affordable to households with moderate, low and very low incomes, including those with special needs.*

Policy H.5.2 *Support a coordinated regional approach to homelessness by supporting public and private housing and services for people who are homeless and work with other jurisdictions and health and social service organizations, including faith-based and other non-profit organizations, to develop a coordinated, regional approach to homelessness.*

Policy H.5.3 *Maintain membership in inter-jurisdictional agencies to promote affordable housing on the Eastside.*

Policy H.5.4 *Support and encourage housing legislation at the county, state, and federal levels that promotes the City's and region's housing goals and policies, including support for affordable and sustainable housing for all residents in the City and region.*

Single family homes near Allen Lake

Goal H.6 Monitoring

Implement Housing Element goals in a manner that is effective, efficient and transparent.

Policy H.6.1 *Adopt a Housing Strategy Plan to outline benchmarks, steps and milestones toward implementation of this Housing Element.*

For more information, see the recommended 2006 Housing Strategy Plan, Exhibit A in Volume.II.H, beginning on page H.77.

Policy H.6.2 *Support regional housing strategies.*

Policy H.6.3 *Monitor ~~regional~~ the city's housing supply, ~~and~~ type ~~with an eye toward~~ and affordability ~~and availability for all income levels, age categories, seniors and special needs populations~~ including measurable progress toward meeting a significant share of the countywide need for affordable housing for very low-, low-, and moderate-income households.*

Policy H.6.4 *Evaluate and report on how the goals and policies of this Housing Element are being achieved.*

Policy H.6.5 *~~As needed,~~ On a regular basis, based on results of monitoring local data and effectiveness of local regulations and programs, reassess and adjust policies and strategies to meet local housing needs.*

City Council Agenda Bill

Meeting Date: **December 6, 2016** Date Submitted: 11/30/2016

Originating Department: City Manager

Clearances:

- ☑ Attorney
- ☐ Community Development
- ☐ Public Safety
- ☐ Admin Services
- ☑ Finance & IT
- ☑ Public Works
- ☑ City Manager
- ☑ Parks & Recreation

Subject: Routine Real Property Transactions – City Acceptance

Action Required: First Reading, no action

Exhibits: 1. Ordinance

Budget: Not Applicable

Summary Statement: This ordinance would designate the City Manager to accept certain routine real property conveyances on behalf of the City.

Background: The City routinely has the need to accept easements and dedications of land related to development, capital projects, and other City projects. Examples of these easements and dedications include utility and right-of-way dedications as part of a short subdivision, binding site plan or building permit process, trail easements conveyed as a requirement of development approval, and stand-alone easements for construction of City capital projects or maintenance of stormwater facilities.

Because staff are involved in the regular development review and/or negotiations for these types of projects, it is most efficient for staff to review and accept such conveyances as they arise. SMC 2.10.020 permits the City Manager to perform duties conveyed by ordinance, and the conveyances that this ordinance would apply to include utility easements, easements associated with an administrative development approval, trail and non-motorized easements, construction easements, ingress and egress easements both for general access and for maintenance of streams and stormwater and other facilities, right-of-way dedications, conservation easements when implementing a Transfer of Development Rights (TDR) program previously approved by the Council and similar routine real property conveyances. The proposed ordinance was reviewed by the Finance Committee on October 20th and November 3rd, and was recommended for consideration by the full Council.

Designating the City Manager to accept these routine conveyances on behalf of the City will assure continued efficiency in such easement and dedication transactions.

Financial Impact: N/A

Recommended Motion: First Reading, no action

Exhibit 1

CITY OF SAMMAMISH
WASHINGTON

ORDINANCE NO. O2016-___

AN ORDINANCE OF THE CITY OF SAMMAMISH, WASHINGTON, AUTHORIZING THE CITY MANAGER TO ACCEPT CERTAIN ROUTINE REAL PROPERTY CONVEYANCES ON BEHALF OF THE CITY; PROVIDING FOR SEVERABILITY; AND ESTABLISHING AN EFFECTIVE DATE

WHEREAS, the City Council of the City of Sammamish is vested with powers over the acquisition, ownership, improvement, maintenance, and protection of public ways and real property of all kinds under the state constitution and RCW 35A.11.020; and

WHEREAS, the City frequently requires or must obtain the conveyance of easements and dedications of land related to commercial, residential, and mixed use development, capital projects, and other City projects; and

WHEREAS, the City Council finds that it is inefficient for the Council to individually consider such routine easements and dedications, and that staff is more familiar with the ongoing negotiation of such projects; and

WHEREAS, the City Council has determined that the City Manager should be authorized to accept certain routine conveyances of real property on behalf of the City in order to promote administrative efficiency; and

WHEREAS, Section 2.10.020 of the Sammamish Municipal Code permits the City Manager to perform duties conferred by ordinance;

NOW, THEREFORE, THE CITY COUNCIL OF THE CITY OF SAMMAMISH, WASHINGTON, DO ORDAIN AS FOLLOWS:

Section 1. Authority to Accept Certain Conveyances. When the cost of any individual conveyance does not exceed $50,000, the City Manager is hereby authorized to accept, on behalf of the City of Sammamish, conveyances to the City of:

1. Utility easements;
2. Easements and right-of-way dedications associated with an administrative development approval;
3. Trail and non-motorized easements;
4. Construction easements for City projects;
5. Ingress and egress easements for access and for maintenance of streams and stormwater management and other facilities;

6. Easements for discharge and/or conveyance of stormwater, and for installation of stormwater facilities;
7. Right-of-way dedications for capital projects and operations or maintenance needs; and
8. Conservation easements resulting from a Transfer of Development Rights (TDR) program approved by the City Council.
9. Other property rights transfers of a similar character and nature.

Section 2. Severability. Should any section, paragraph, sentence, clause or phrase of this Ordinance, or its application to any person or circumstance, be declared unconstitutional or otherwise invalid for any reason, or should any portion of this Ordinance be pre-empted by state or federal law or regulation, such decision or pre-emption shall not affect the validity of the remaining portions of this Ordinance or its application to other persons or circumstances.

Section 3. Effective Date. This Ordinance shall be published in the official newspaper of the City, and shall take effect and be in full force five (5) days after the date of publication.

ADOPTED BY THE CITY COUNCIL AT A REGULAR MEETING THEREOF ON THE _____ DAY OF _____, 2016.

CITY OF SAMMAMISH

_____
Mayor Donald J. Gerend

ATTEST/AUTHENTICATED:

_____
Melonie Anderson, City Clerk

Approved as to form:

_____
Michael R. Kenyon, City Attorney

Filed with the City Clerk: November 30, 2016
First Reading: December 6, 2016
Passed by the City Council:
Date of Publication:
Effective Date: