City Council Study Session

AGENDA

February 12, 2013 6:30 pm – 10:00 pm

Call to Order

Public Comment

*This is an opportunity for the public to address the Council. Three-minutes limit per person or 5 minutes if representing the official position of a recognized community organization***.**

Topics

- Planning Commission Handoff – Environmentally Critical Areas Regulations
- Report – Ebright Creek Monitoring and Enhancement Project

Adjournment

City Council meetings are wheelchair accessible. American Sign Language (ASL) interpretation is available upon request. Please phone (425) 295-0500 at least 48 hours in advance. Assisted Listening Devices are also available upon request.

AGENDA CALENDAR

Febuary 2013			
Tues. 2/12	6:30 pm	Study Session	PC Hand Off: ECA Regulations Ebright Creek Monitoring and Habitat Restoration
Tues 2/19	6:30 pm	Special Meeting	Resolution: Final Plat Sammamish Orchards (consent) Resolution: Final Acceptance Eastlake Ball Field Rennovations (consent) Amendment: Permit Tech Services/Prothman (consent) Interlocal: Solid Waste Agreement Operating and Management Agreement for Community Center/YMCA Discussion: SE 8th Street Park Plan & Recommended Names
March 2013			
Tues. 3/5	6:30 pm	Regular Meeting/Study Session	Resolution: ARCH 2013 Work Program/Budget (10 min) Resolution: Final Plat Evoke at Pine Lake (consent) Contract: Economic Development Strategy/??(consent) Land Lease/YMCA Property (30 min) SS:Environmentally Critical Areas Update (120 min)
Tues. 3/12	6:30 pm	Study Session	2013 Pavement Management Program – Overlay (30 min) Environmentally Critical Areas Update (120 min)
Mon. 3/18	6:30 pm	Regular Meeting/Study Session	Resolution: Final Acceptance Inglewood Hill Non-Motorized (consent) SS:Environmentally Critical Areas Update (120 min)
April 2013			
Tues. 4/2	6:30 pm	Regular Meeting	Proclamation: Child Abuse Prevention Month Fire Services (CM Report) Boys & Girls Club Report
Tues. 4/9	6:30 pm	Study Session	Environmentally Critical Areas Update (If needed)
Mon. 4/15	6:30 pm	Regular Meeting	Environmentally Critical Areas Update (If needed)
May 2013			
Tues. 5/7	6:30 pm	Regular Meeting	Proclamation: Arts Education Month Public Hearing/First Reading: Environmentally Critical Areas Update
Tues. 5/14	6:30 pm	Study Session	
Mon. 5/20	6:30 pm	Regular Meeting	Second Reading: Environmentally Critical Areas Update
June 2013			
Tues. 6/4	6:30 pm	Regular Meeting	
Tues 6/11	6:30 pm	Study Session	
Mon. 6/17	6:30 pm	Regular Meeting	

To Be Scheduled	**To Be Scheduled**	**Parked Items**
Ordinance: Second Reading Puget Sound Energy Franchise Joint Meeting/LWSD Joint Meeting/ISD		Cable TV Franchise

Item 1

Planning Commission

801 228th Avenue SE • Sammamish, WA 98075 • Phone: 425.295.0500 • Fax: 425.295.0600 • web: www.ci.sammamish.wa.us

TO: City Council February 7, 2013

FM: Kathy Richardson, Chair

Mike Luxenberg, Vice Chair

RE: Recommendation for Environmentally Critical Areas Regulations Update

On behalf of the Planning Commission, we are pleased to transmit the Planning Commission's recommendations for the Environmentally Critical Areas (ECA) Regulations Update. At the City Council's direction, the Planning Commission used a thorough, inclusive, and well documented process to develop the recommended amendments. The Planning Commission has worked within the scope established by the City Council in its "Known Topics" documentation, and has further ensured that a complete Best Available Science review of the ECA regulations has been completed.

Thorough Fact-finding and Analysis

The City Council provided direction to the Planning Commission to review the existing Environmentally Critical Areas regulations and identified a list of known topics to be addressed. The update has also been prepared to satisfy the Growth Management Act (GMA) update requirements by considering legislative changes and including Best Available Science (BAS) as required under the GMA.

Best Available Science reports were produced by the City's consultant AMEC Environment & Infrastructure, Inc., detailing the current BAS for a variety of topics, noting any legislative changes, and including recommendations where appropriate. The consultant reports were reviewed and considered as part of the update process. The Commission and the public also were provided opportunities to ask questions of the consultant experts related to each report. The city actively worked with several agencies, including the local water and sewer districts, and the Department of Ecology, to obtain additional relevant information for the Planning Commission's review and recommendation.

The BAS reports serve as the primary source for the majority of the recommended amendments to the ECA regulations. Citizen and agency testimony were also valuable sources, which informed the ECA update process and are well documented in the public record; in the case of major policy items, the Evaluation Forms developed by the Planning Commission further document the sources of proposed amendments.

Inclusive Process

The ECA update used an extensive public participation process that began in March 2012 and included several public open house/roundtable discussions attended by staff, consultants and planning commissioners, more than 25 Planning Commission meetings, a number of opportunities for interested parties to meet in small groups or individually with staff, and a public hearing process. A comprehensive web page was developed and updated throughout the process, in addition to periodic e-mail updates through *GovDelivery*, a postcard was mailed to the entire city inviting people interested in the subject to attend Planning Commission meetings, and articles were published in the city newsletter. A total of 280 individual written comments were received as well as more than 165 verbal comments, and responses to these comments have been generated and are part of the public record.

A variety of opinions were expressed by the public and various governmental agencies related to proposed or needed code revisions to the ECA. For example:

- Some property owners expressed a desire for greater flexibility around property restrictions, desiring additional development opportunities, both related to existing residential uses, and subdivision. Primarily,

these comments related to additional flexibility on sites with smaller, lower value wetlands, allowing additional development and structures within stream and wetland buffers in developed neighborhoods, and increasing flexibility for both existing residential development and subdivision in the erosion hazard near sensitive water bodies overlay, an area located above and upon the slopes above Lake Sammamish.

- Other property owners expressed a desire to ensure adequate protection of the environment, and preservation of the natural features that provide important ecological functions and bring value to Sammamish as a desirable community. In particular, the Planning Commission heard many concerns related to the protection of water quality in Lake Sammamish, and the possible degradation of water quality if development is allowed in the erosion hazard near sensitive water bodies overlay. Further, some property owners were concerned about continuing to protect the functions and values of streams, wetlands, associated buffers, and wildlife habitat preservation.

The Washington State Department of Ecology, the Sammamish Plateau Water and Sewer District, Northeast Sammamish Sewer and Water District and King County Department of Natural Resources and Parks have also provided review and comment into the update process. The Department of Ecology primarily focused its comments on the protection of wetlands, the erosion hazard near sensitive water body overlay, and the eventual adoption of the ECA regulations in to the Shoreline Master Program. The water and sewer districts recommended additional protections for areas within the city susceptible to groundwater contamination (i.e. Critical Aquifer Recharge Areas). The King County Department of Natural Resources and Parks provided comments on a proposed mitigation fee-in-lieu program for wetlands and streams.

Well Documented Review Process

The state requires that each community identify, designate, and protect critical areas through their development regulations, and update the regulations periodically. Best Available Science (BAS) must be included in order to assure protection of the functions and values of critical areas. Additionally, special consideration is required of conservation or protection measures necessary to preserve or enhance anadromous fisheries. The city's consultant, AMEC Environment and Infrastructure, Inc. has documented this review in their BAS reports and addenda, to inform the Planning Commission's process. Most of the Planning Commission recommendations are consistent with Best Available Science. For some of the items, the Planning Commission has recommended deviating from Best Available Science; a rationale and explanation is documented as required by the Growth Management Act.

The Planning Commission has used a fact-based process in order to balance competing viewpoints and interests, while at the same time meeting the requirements of state law, addressing the known topics, considering the goals and policies of the comprehensive plan, and weighing the comments of various governmental agencies with jurisdiction or expertise.

In order to provide a framework for this process, the Commission developed a success statement and ground rules for public participation in the ECA update process. Additionally, to ensure appropriate consideration of the various aspects of proposed code changes, the Commission developed and utilized a new evaluation form mechanism and decision-making process. The evaluation forms helped the Commission evaluate and weigh the various considerations related to the environment, implementation, and property aspects of the major policy items under consideration. An overall evaluation rating resulted for each proposed amendment, as well as for alternatives suggested by the public, staff, or the Commission. The Commission has recommended including in the ECA revisions only those items that received an overall positive rating.

In addition to major items, the Commission also considered a number of minor items and various "housekeeping" changes that were considered improvements in clarity, readability, and ease of use. These lesser amendments were discussed on an as needed basis and approved as a group.

Summary Recommendation

The Planning Commission **recommends, by a vote of six to one, that the City Council adopt** the proposed Environmentally Critical Areas revisions as amendments to the Sammamish Municipal Code. The Planning Commission also recognizes the city's desire to regulate critical areas consistently city-wide, including within shoreline

jurisdiction, and therefore also **recommends that the city amend the Shoreline Master Program** (SMP) to incorporate these changes into the SMP.

A summary of the recommended amendments and the minority reports are attached to this transmittal.

On February 12, the staff will provide a binder of material, titled "2013 ECA Update Volume 1", which we understand will include the following items:

- PC handoff materials from 2/6:
    - Transmittal memo
    - Known topics document
    - List of recommended major policy items with summary statements, identify split votes
    - List of recommended minor items
    - Minority reports
- Existing flexibilities
- Success statement
- Evaluation forms-final PC versions
- Rating key and overall effects document
- Rationale for deviations from BAS
- Planning commission recommended code with amendments
- Relevant Comprehensive Plan policies
- Growth Management Act requirements (RCW / WAC)

A second binder of background material, titled "2013 ECA Update Volume 2" will be available on request with the additional following information:

- Rules of conduct from CC retreat binders and tab 5 in PC binder
- BAS reports and addendums
- Public comments
- Agency comments
- Previous drafts of evaluation forms
- All other materials provided in the PC binder, except Tab 6 (PC schedule) and those items in Volume 1
- Cumulative Impact Analysis
- SEPA Checklist & Determination

Staff has reported that they will conduct the required review under the State Environmental Policy Act (SEPA) during the City Council's review process, and that they will prepare a Cumulative Impact Analysis, so as to process a Shoreline Master Program Amendment for review by the Department of Ecology.

Thank you for your consideration of our recommendations. We look forward to responding to your questions at the February 12th study session.

If you have any questions, please contact Kamuron Gurol, Director of Community Development at (425) 295-0520 or kgurol@ci.sammamish.wa.us.

Item 1

Item 1

Planning Commission

801 228th Avenue SE • Sammamish, WA 98075 • Phone: 425.295.0500 • Fax: 425.295.0600 • web: www.ci.sammamish.wa.us

TO: City Council February 6, 2013

FM: Kathy Richardson, Chair

Mike Luxenberg, Vice Chair

RE: Summary of Major and Minor amendments to the ECA Regulations

Through the course of their review, the Planning Commission identified over 75 possible changes to the Environmental Critical Area (ECA) regulations. Most of these amendments were identified during the Best Available Science review and were subsequently included in the recommended updates to the ECA regulations. The Planning Commission also initially identified 17 major policy amendments to the ECA regulations, which were reduced to 12 items through the course of their review.

The following list represents a summary of all of the amendments incorporated into the Planning Commission Recommended Draft ECA Regulations. For reference, the Planning Commission's vote on each recommended policy approach to each item is captured as part of the description (votes for – votes against).

Recommended major policy amendments to the ECA regulations: After review and deliberation, the Planning Commission has recommended that the City Council adopt the following major policy amendments to the ECA regulations.

2-8b. **Fee-in-lieu mitigation for streams (6-0).** The City's consultant recommended that the city consider adopting a fee-in-lieu mitigation program for stream and wetland mitigation.

2-13c. **Alternative wildlife protection approach (5-1).** This amendment was proposed as an alternative to a recommended update to the Fish and Wildlife Habitat Conservation Area regulations. The alternative allows for site specific analysis of wildlife habitat protection, but does not include the identification of species of priority.

2-14c. **Alternative Balance of ECA protection and property use (6-0).** This amendment clarifies how the city regulates legally established improvements within ECA features and associated buffers. The amendment was proposed as an alternative to site specific buffer delineation, and also provides increased flexibility for established improvements.

3-3b. **Fee-in-lieu mitigation for wetlands (6-0).** The City's consultant recommended that the city consider adopting a fee-in-lieu mitigation program for stream and wetland mitigation.

3-6. **Revise wetland mitigation ratios in the code to be dependent on the kind of mitigation proposed (6-1).** The City's consultant recommended that the city refine the wetland mitigation tables to clarify the mitigation ratios associated with different types of wetland mitigation (e.g. creation, rehabilitation, etc).

3-7b. **Wetland Mosaic (6-0)**. Washington State requires that the city evaluate a wetland's status as part of a mosaic of wetland features when classifying the wetland and applying ECA regulations. This amendment clarifies the requirement in the city's regulations.

3-19. **Wetland Development Flexibilities (5-1)**. This amendment was identified during public testimony to the Planning Commission. The amendment will increase the amount of wetland alteration allowed under the ECA regulations without first avoiding the impact, and will provide reduced buffers for very small, low value wetland features.

4-15. **Development in the no-disturbance area of the Erosion Hazard Near Sensitive Water Bodies (EHNSWB) Overlay.** The amendments associated with this policy item focused on two aspects of development.
Item 4-15e **(5-2)** addresses single family home construction / modification on existing lots in the no-disturbance area. This item allows for an expansion in the amount of impervious surface on a site in the no-disturbance area, if no increase in stormwater volume will result.
Item 4-15g **(5-2)** authorizes subdivisions in the no-disturbance area of the EHNSWB overlay subject to a pilot program which would control erosion and sediment during and after development. Subdivisions would either directly tightline into Lake Sammamish or not increase the amount of stormwater volume.
Item 4-15f **(4-3)** would expand the pilot program under 4-15g to allow projects that incorporate Low Impact Development techniques and level 3 flow control into their design to subdivide subject to the pilot program. Storm water would he handled via existing man-made conveyances (e.g. road side ditches).

Major policy amendments to the ECA regulations that are NOT recommended: The Planning Commission has also evaluated several possible major amendments to the ECA regulations, and after deliberations has recommended that the City Council not adopt the following amendments. The following amendments are not reflected in the Planning Commission Recommended Code Amendments.

2-7b. **Capital Projects & Type F Stream Relocations (2-4).** The City's consultant recommended that the city consider prohibiting the relocation of Type F streams for capital projects without requiring the use of a "Public Agency / Utility Exception".

3-4b. **Wetland Buffer Modified by Conditions (0-6).** This amendment was initially proposed by the City's consultant as a way to better reflect the effects of high intensity improvements adjacent to wetland buffers. The amendment would have resulted in the increase in many of the wetland buffers.

4-8c. **Steep Slope Exemption (3-3).** This amendment would have required that a site constrained with a steep slope (i.e. a 40% slope) that could otherwise be exempted from the ECA regulations, also comply with the requirements of the 2009 King County Surface Water Design Manual.

Other recommended amendments to the ECA regulations: The following recommended amendments to the ECA regulations are also included in the Planning Commission Recommended Code Amendments. These amendments were sometimes referred to as "minor" amendments by the Planning Commission, but actually include both non-substantive changes to the existing regulations, and substantive changes that did not require the depth of analysis afforded the "Major" policy amendments.

CARA

1-1. Modify the Critical Aquifer Recharge Area (CARA) regulations to further regulate land use activities that use chemicals that have a potential to degrade groundwater and surface water quality when used inappropriately or in excess.

1-3. Limit groundwater injection wells within Class 1 and 2 CARAs.

Seismic Hazard Area

1-4. Update the Seismic Hazard Area definition to specifically reference the terminology used within the updated Seismic Hazard map.

Stream

2-3. Require that trails crossing streams and aquatic areas use bridges and raised boardwalks.
2-4. Add functional criteria for allowing buffer reductions.
2-5. Add functional criteria for increasing buffer widths.
2-6. Authorize relocations of Type F streams for restoration purposes (amend language authorizing stream restoration to include stream relocation).

Wetland & Wetland Management Area overlay

3-1. Adopt the latest federal delineation manual and its supplemental documents, these should be used to delineate and categorize wetlands.
3-5. Provide additional guidance for mitigation impacts to wetland buffers.
3-10. Consider wetland buffer reduction options in combination with preserving / maintaining wetland and buffer functions.
3-20. Consolidate wetland definitions (public comment #75).

Lake Management Areas

3-12. Introduce thresholds to trigger stormwater treatment for redeveloped sites and pervious pollutant generating areas.
3-13. Allowing stormwater treatment technologies that have been tested using Ecology's TAPE protocol and given a General Use Level designation to be incorporated into stormwater treatment systems in the Lake Management Areas.
3-14. Reference the King County or Ecology manual procedures to size, analyze, and design stormwater treatment BMPs for phosphorus reduction.

Erosion Hazard Areas

4-1. Define the "fully mitigated" conditions when construction is excepted from the seasonal clearing restrictions and allowed during the wet season [SMC 21A.50.220(1)(a)].
4-2. Specify actions required when measured site discharges exceed state water quality criteria [SMC 21A.50.220(4)].

Erosion Hazard near Sensitive Water Body overlay

4-3. Amend the description of the top of the no-disturbance area for clarity and require that delineation of the no-disturbance area by qualified consultant [SMC 21A.50.225(3)(a)].

4-5. Amend language specifying which developments must evaluate infiltration from those properties that historically "drained to" the no-disturbance zone to those properties that currently "drain to" the no-disturbance zone. [SMC 21A.50.225(3)(b)].

Landslide Hazard Areas

4-7. Revise the standard within SMC 21A.50.260(1) such that landslide hazard area buffers extend from top and toe of slope (instead of from edge).
4-9. Delete SMC 21A.50.260 (6) regarding drainage design in landslide hazard areas.
4-10. Option for the City to have a third party review of geotechnical reports in landslide hazard areas.
4-11. Revise SMC 21A.50.260 (2)(b) to include specified minimum static and seismic factors of safety for slope stability.
4-12. Revise SMC 21A.15.680 to include a definition of distinct break within a slope.
4-13. Revise definition of geologist in SMC 21A.15.545 to licensed geologist.
4-14. Revise definition of geologist and qualified professional in SMC 21A.15.545 and SMC 21A.15.942 respectively.

Administrative

5-1. Clarify the Partial Exemption provisions contained in SMC 21A.50.060.
5-2. Revise the provisions for select vegetation removal contained in SMC 21A.50.060.
5-3. Clarify the provisions and restrictions on removal of large woody debris contained in SMC 21A.50.060.
5-4. Clarify the use of and extent of mapping of critical areas contained in SMC 21A.50.090.
5-6. Revise the requirements for critical areas studies contained in SMC 21A.50.130.
5-7. Revise the signage and fencing requirements contained in SMC 21A.50.170.
5-8. Revise SMC 21A.50.260(2)(a) such that critical areas studies for landslide hazard areas can't be waived.
5-9. Clarify the provisions for previously established wetland and stream buffers contained in SMC 21A.50.290(1)(b) and 21A.50.330(1)(b).
5-10. Clarify the wetland buffer averaging provisions contained in SMC 21A.50.290.
5-11. Clarify the wetland buffer and stream buffer averaging provisions contained in SMC 21A.50.290 and 21A.50.330.
5-12. Clarify livestock standards for wetlands and stream protections standards contained in SMC 21A.50.290 and 21A.50.340.
5-13. Clarify the allowance of stormwater discharge at the edge of wetland and stream buffers in SMC 21A.50.300 and 21A.50.340.
5-14. Clarify the restoration requirements for wetlands streams, and stream / wetland buffers contained in SMC 21A.50.310 and SMC 21A.50.350.
5-15. Clarify the limitations on introducing non-native vegetation in SMC 21A.50.300 and 21A.50.340.
5-16. Clarify the stream and habitat restoration or enhancement provisions in SMC 21A.50.340.
5-17. Eliminate the "naturally occurring ponds" provisions contained in 21A.50.351.
5-18. Relocated definitions for Lake Management Areas to the definition chapter (SMC 21A.15) from SMC 21A.50.355.
5-20. Clarify the "existing development" or legal non-conforming regulations as applied to ECA regulations.

Item 1

Planning Commission

801 228th Avenue SE • Sammamish, WA 98075 • Phone: 425.295.0500 • Fax: 425.295.0600 • web: www.ci.sammamish.wa.us

TO: City Council February 6, 2013

FM: Kathy Richardson, Chair

Mike Luxenberg, Vice Chair

RE: Parking Lot items identified during the ECA review process.

During the course of the Environmental Critical Area (ECA) update process a number of items were raised that were outside the scope of the review that the Planning Commission had been tasked to perform by the City Council. We noted these items when they arose and placed them in a "parking lot". The Planning Commission has not done any fact-finding and makes no recommendations in connection with these items.

Parking Lot Items:

Seismic Hazard Area

1-5. Update the Critical Aquifer Recharge Area map (based upon information from the water and sewer districts in the city), and monitor United States Geological Survey (USGS) mapping of the Sammamish region.

1-4. Adopt a new Seismic Hazard Area map based on the 2004 DNR Liquefaction Susceptibility Map.

Wetlands

3-9. Conduct one or more focused basin-level planning studies to evaluate existing functions and likely future development patterns.

Lake Management Areas

3-12. Beaver Lake phosphorous modeling work should include an evaluation of the impacts of various stormwater treatment performance goals for reducing phosphorus loading to the lake.

Erosion Hazard Near Sensitive Water Body overlay

4-1. Update maps to correctly label "Erosion Hazard Areas" (Figure 1 of the BAS report) and "Erosion Hazard Near Sensitive Water Body Overlay".

Other

1. Creation of an Ombudsman position to facilitate city / applicant / property owner interactions (public comment #61).
2. Amend the net density ordinance to eliminate the deduction of critical areas and buffers from gross acreage (public comments #15, 74, 108)

Item 1

Item 1

Planning Commission

801 228th Avenue SE • Sammamish, WA 98075 • Phone: 425.295.0500 • Fax: 425.295.0600 • web: www.ci.sammamish.wa.us

Date: February 6, 2013

To: City Council

From: Planning Commissioner Michael Luxenberg, Vice Chair, Mike Collins, Mahbubul Islam

RE: Minority Report #1

Item 4-15f – Osgood Proposal for Development in the No Disturbance Area

The Planning Commission approved this item by a 4-3 vote. It is the minority's view that the erosion risk and possible harm to Lake Sammamish as a result of approving this item is greater than prudent public policy should allow even as part of a pilot project.

Background

This item is the result of a good faith effort by both property owners and the City Staff to devise an acceptable means for property owners without direct access to the Lake Sammamish to develop their properties. The item as approved by the Planning Commission includes a number of elements intended to manage storm water and protect downslope property owners and Lake Sammamish. However, the approved version does not contain the previously suggested requirement that the amount of storm water leaving the property after development be no greater than the amount of storm water leaving the property prior to development. Such a requirement was included in previous draft versions of this item but has been removed. The absence of this requirement regarding the volume of storm water discharge leaving the property is the key risk element. The undisputed fact is that the soils on the slopes above Lake Sammamish are highly erosive. That fact, combined with the growing variability of Seattle weather patterns, call into question the ability of the existing manmade conveyance system (roadside ditches) to handle the additional storm water that would be produced as a result of subdivision development during and after a large storm or similar event.

Thank you for your consideration of our recommendations.

Item 1

Item 1

Planning Commission

801 228th Avenue SE • Sammamish, WA 98075 • Phone: 425.295.0500 • Fax: 425.295.0600 • web: www.ci.sammamish.wa.us

Date: February 6, 2013

To: City Council

From: Planning Commissioner Mike Collins

RE: Minority Report #2

Erosion Hazard Near Sensitive Water Body Overlay, Alternatives to Setbacks & Buffers

Erosion Hazard near Sensitive Water Body overlay

I have several comments related to allowing development in the Erosion Hazard near Sensitive Water Body (EHNSWB) Overlay. Generally, my comments are based on what should be an overall goal for the EHNSWB overlay – no new water (hopefully less) on steep slopes. Based on that goal, I would suggest the following actions to the City Council:

1. Development proposals should be required to include the following techniques, which would also receive credit related to things like impervious surface limits, height, and parking ratios:
    a. The planting of deep rooting trees (e.g. reforestation with seedlings 10 to 12 inches tall) in open areas.
    b. Featuring rainwater harvesting (e.g. toilets, washing machines, etc) in a development.
    c. Incorporating sustainability techniques (e.g. reduce, reuse, recycle) in the development proposal.
2. Sammamish should be an active partner in funding surface water improvements in the EHNSWB overlay (e.g. 50% funding by the City, 50% funding through a Local Improvement District).
3. Cottage housing should be allowed within the EHNSWB overlay, and in particular the R-1 zone, to encourage reduced impervious surfaces through clustering.
4. The Pilot Program, with the exception of the approach proposed under item 4-15F (Osgood proposal), should instead be adopted as a permanent amendment to the EHNSWB regulations (i.e. a pilot program is not necessary).
5. Item 4-15F (Osgood proposal) does not provide adequate safe guards to citizens downstream and should not be allowed, even as a pilot program.
6. Item 4-15E (Kapela proposal) does not provide adequate safe guards in that it could result in an increase on water discharge into steep slopes.

Alternatives to Setbacks & Buffers

I recommend that the City Council consider allowing for "Reasonable Use Exception" to allow for stream and wetland improvements, where a Determination of Non Significance is allowed in exchange for mitigation. As part of this process change, the city should consider a revised process which would be incorporate staff, the applicant, and a 3rd party (paid for by the applicant) in the decision making process.

Thank you for your consideration of our recommendations.

Item 1

Item 1

Planning Commission

801 228th Avenue SE • Sammamish, WA 98075 • Phone: 425.295.0500 • Fax: 425.295.0600 • web: www.ci.sammamish.wa.us

Date: February 6, 2013

To: City Council

From: Planning Commissioner Joe Lipinsky

RE: Minority Report #3

Proposed Environmental Critical Area (ECA) Code Update

I respectfully dissent from the Planning Commission's recommendations relating to environmentally critical areas (ECA). While I commend my fellow Planning Commissioners for the time and effort they spent working on this difficult topic and respect their decision, I dissent for the following reasons. While I believe that the recommendations are an improvement over the city's current ECA regulations, I cannot agree with the recommendations because they do not adequately balance citizens' rights to use their properties against environmental harm. Instead the recommendations continue the past policy of adopting unreasonable levels of environmental protection at the expense of Sammamish residents whose rights to use their properties are quantifiably harmed.

Specifically, in reviewing each ECA regulation, I ask the following three questions: (1) does science show that the regulation is necessary to prevent harm to the environment; (2) does state law require the regulation, and (3) is the regulation narrowly tailored to minimize the burden imposed on the landowners affected. Without asking these three questions when reviewing ECA regulations, you default to the starting point of unreasonable levels of environmental protection. In essence, the Planning Commission's recommendations have put the proverbial cart before the horse by starting with the assumption that the existing ECA regulations were needed instead of asking the questions outlined above.

By asking whether the regulation is necessary and then whether the regulation is narrowly tailored, I come to different conclusions than the Planning Commission. Two important examples follow.

First, in regard to small, isolated, low-value wetlands, uncontroverted public comment reveals there is no science showing the environment is harmed if these low-value wetlands of up to 4,000 square feet are exempt from ECA regulations. In fact, this is exactly what the city of Renton just did. Additionally, since the Washington State Department of Ecology approved Renton's plan it must be allowed under state law. Thus, this is the standard Sammamish should adopt because it correctly balances harm to the environment and citizens' rights to use their properties.

Second, in regard to the no disturbance area, science does show that regulation is needed to protect the environment. The Planning Commission's recommendation, however, fails the third question that should be asked – is the regulation narrowly tailored to minimize the burden imposed on the landowners affected by the regulation. Once again uncontroverted public comment shows that every jurisdiction, other than Sammamish, that surrounds Lake Sammamish utilize the most recent King County Storm Water Manual to protect the environment. This is the standard Sammamish should adopt because it correctly balances harm to the environment and the citizens' rights to use their properties.

Item 1

While there is no way to accurately predict how the ECA regulations recommended by the Planning Commission will harm Sammamish residents, based on past experience with ECA regulations, we can rest assured that significant harm will result. For example, Sammamish residents – David and Megan Gee – suffered real harm because of past unreasonable ECA regulations that did not ask my three questions when these ECA regulations were adopted. Because the Gee's property contains a small, low-value, isolated wetland they were prevented from building a house on their property. This caused the assessed value of their property to fall by more than $600,000. While science does not show that building a house on the Gee's property would lead to any environmental harm and state law did not require this unfair and unreasonable result, past ECA regulations prevented the Gee's from building a house. Consequently, the unintended effect of this past ECA regulation resulted in real harm to Sammamish residents, while providing no offsetting benefit to the environment.

In conclusion, while the Planning Commission's recommendations relating to the ECA do a better job of balancing citizens' rights to use their properties against environmental harm, the recommendations will cause unfair harm to Sammamish residents because they are not guided by the following key questions: (1) does science show that the regulation is necessary to prevent harm to the environment; (2) does state law require the regulation; and (3) and is the regulation narrowly tailored to minimize the burden imposed on the landowners affected.

Thank you for your consideration of our recommendations.

Item 1

Planning Commission

801 228th Avenue SE • Sammamish, WA 98075 • Phone: 425.295.0500 • Fax: 425.295.0600 • web: www.ci.sammamish.wa.us

Date: February 6, 2013

To: City Council

From: Planning Commissioner Mahbubul Islam

RE: Minority Report #4

Isolated Wetlands, Development in the No Disturbance Area, Wildlife Protection, Steep Slope Exemptions, etc.

I dissent from the Planning Commission's recommendation for approval of the ECA update and file this minority report explaining the reasons for my dissenting views. As a member of the Commission, I have actively participated in all planning commission meetings, carefully considered all public testimonies, independently researched and reviewed all pertinent issues, and evaluated both staff input and the consultant's Best Available Science (BAS) reports. I have produced this minority report based on my collective assessment of all these sources of information.

Overall, the Commission's recommendations failed to include many BAS conclusions and substantially reduced protections of ECA values and functions by expanding exemptions and adding allowable activities within buffers. Many of the Commission's proposed code amendments, except minor issues and clarifications, simply serve the economic interests of a handful of property owners and thereby, causes lasting damage to already degraded critical areas and water quality. I urge the Council to put collective public interests above individual property interests, and restore the integrity and objectivity of the public process by rejecting those recommendations not supported by the BAS.

Context and Background

Protecting the values and functions of ECAs is our first and foremost responsibility under the current review effort. The State Growth Management Act (GMA) mandates it, and the established city goals affirm and strongly support it. Our ECA review effort should have begun with a thorough evaluation of the current conditions of the existing ECA functions and values. After that, we needed to determine whether the existing ECA regulations should be revised to provide necessary environmental protection. Despite existence of water quality data from some lakes and streams, and study reports from sub-basin planning, no assessment of the current baseline conditions of the city's existing ECAs was presented or shared with the Commission. The Commission, thus, lacked a comprehensive understanding of the importance of the protection of ECAs with any Sammamish specific data and facts.

The policies at issue here deal with environmentally critical areas, which are deemed "critical" because of their extraordinary values. We already know that many of our wetlands, streams, and lakes including Lake Sammamish, Pine Lake, Pine Lake Creek, Ebright Creek, and Laughing Jacobs Creek are listed by Washington Department of Ecology as the most impaired 303 (d) category five water bodies which

require management plans for improvement. Therefore, we must develop regulations to maximize their protection.

Basis of my objections

The Commission received a significant number of public comments asserting that current ECA codes restrict private property rights and requesting that we consider a "balance" between the environmental protection and property rights. As a result, the Commission established an evaluation approach which considers effects on environment, implementation, and property in an equal manner. This emphasis on "equality and balance" coupled with a lack of understanding of the current conditions of the city's ECAs, deterred the Commission from seeking a better level of protection for the ECA values and functions.

Let us briefly examine statutory directions for property rights in the GMA and Revised Code of Washington (RCW). In describing GMA Planning goals, RCW 36.70A.020 states that, "*The property rights of landowners shall be protected from arbitrary and discriminatory actions*." Then, in RCW 36.70A.370, the legislature provided a meaning for what constitutes "arbitrary and discriminatory actions" by directing the local governments to "*evaluate proposed regulatory or administrative actions to assure that such actions do not result in an unconstitutional taking of private property*." Based on these legislative contexts, we can conclude that it is not the "equal balance" between the environment and property rights that our legislature mandated, rather the "unconstitutional taking of private property" that they prohibited. The state and local governments demonstrate compliance with the prohibition of unconstitutional taking of private property by adopting codes to retain a property owner's right to "reasonable" use of his/her property. Sammamish's current ECA code, like many other jurisdictions', contains a "reasonable use exception" clause, which many property owners have successfully used. No additional equal balance test is therefore necessary, or called for.

The Commission employed an evaluation form to rate impacts of any proposed code amendment on three different paradigms: environment, implementation, and property. For a code amendment to move forward, it must be rated overall "positive" based on the composite results of three individual ratings. In this scheme, the protection of ECA's environmental values and functions is simply reduced to a third of the overall goal and a code amendment would not be rated overall "positive" solely based on its extraordinary environmental benefits. If it reduces economic interests of property owners or causes any difficulty with implementation, the evaluation form, by its underlying design, would rate the code amendment overall "negative." There is no such statutory basis in the state GMA or any other relevant federal, state, or local laws to support this rating mechanism, which would consider code amendments to protect ECA values and functions only if they are deemed economically feasible and easily implementable.

The Commission had an objective basis (i.e. BAS) to evaluate merits of environmental protection of ECA values and functions. However, for property and implementation elements, the Commission had no such objective analysis or information (i.e., cost-benefit analysis) available; therefore, to rate these elements, the Commission had to rely on subjective anecdotal information, public testimony, and personal judgment calls. In this underlying context, Commission's recommendations suffered from a significant bias, favoring the interests and economic benefits of property owners. This bias was evident when the Commission changed original staff ratings in some evaluation forms by moving the rating for environment from a "large P" to a "small p" and property rating from a "small p" to a "large P."

Staff and Commission also allowed property owners to "influence" the outcome in an unusual manner. In some situations (i.e., development in the no disturbance area), the property owners, their consultants and attorneys simply wrote the "draft code." As the Architects of the code, these property owners designed the code the way they saw meeting their needs. The staff and commission then took a secondary role, which is, to react to the draft code. In other cases (i.e., isolated wetland exemption), the staff arranged for property owners and their attorneys a meeting with the Department of Ecology where they had an unusual opportunity to negotiate the substance of the code. The lack of representation of the broader public interests in such critical junctures of code development ultimately weakened these codes.

The protection of ECA values and functions, which is vital to both citizens and ecosystems of Sammamish, should be considered a primary objective of our city government. The natural beauty of the city attracted all of us to call it our "home", therefore saving its "precious and pristine emerald jewels" is a call of duty that should not be relegated to a back seat. Sammamish is the first Eastside city to complete an ECA review effort since 2010; we should lead the way and our ECA codes should serve as a model for other cities with which we share the management responsibility of the Lake Sammamish watershed.

Departure from BAS

After evaluating all the information included in the record to-date, I could not ascertain any overwhelming rationale to deviate from any BAS recommendations; GMA requires that ECA updates not only consider BAS, but also demonstrate that it included BAS. If the Council wishes to depart from a BAS recommendation, I request that requirements cited below (per RCW 365-195-915) are followed:

(i) Identify the information in the record that supports its decision to depart from science-based recommendations;

(ii) Explain its rationale for departing from science-based recommendations; and

(iii) Identify potential risks to the functions and values of the critical areas at issue and any additional measures chosen to limit such risks.

As of the date of this memo, the Commission's public record lacks full compliance of these statutory requirements.

Detailed Objections

For brevity and effectiveness, I have prioritized my objections and only listed the ones of significant concerns to me:

1. <u>Increase of Isolated Wetland Exemption and Wetland Buffer Reduction (Item 3-19)</u>

Our current ECA code already provides some flexibility for the property owners by exempting up to 1,000 square feet wetlands. I recommend to the Council to not expand any further expansion of the current size based exemption for the following reasons:

- Best Available Science does not support any wetland exemption based on its size or lack of hydrological connection with other water bodies. AMEC's BAS report on Wetlands (pg. 20) states that: "Due to the potential ecological functions of small isolated wetlands, best available science indicates that no wetland should be completely exempt from review or regulation. As described previously, there is scientific evidence to suggest that small, isolated wetlands may potentially provide functions equivalent to larger, non-isolated wetlands."

- The Washington Department of Ecology's guidance document suggested a size based threshold only for small cities which lack wetland staff expertise, yet required to comply with GMA's mandate for critical areas ordinance development. Sammamish is not certainly one of these small cities; in fact, we have a staff wetland biologist (Kathy Curry) with appropriate expertise.

- The Ecology's small cities guidance document describes an exemption (pages A-3 and A-4) limited to 1000 square feet class III and IV category isolated wetlands which meet certain parameters. Our current ECA regulations already allow for isolated wetlands less than 1000 square feet to be exempted from wetland development standards and may be altered by filling or dredging. Therefore, we have already included this flexibility in our current code, which need not be increased any further.

- Our neighboring jurisdictions, such as, Redmond, Bellevue, and Issaquah have size based wetlands exemption ranging from sizes 250 square feet to 2,500 square feet. Sammamish's current 1,000 square feet is within these ranges. Any further expansion of the exemption will seriously undermine many years of collective efforts to the adherence of the "no net loss of wetlands" policy.

- The negative environmental consequences resulting from increasing the size threshold from 1,000 to 4,000 square feet (or 2500 square feet) must be considered as a "large negative" in the Commissions' evaluation form of this item.

- Department of Ecology cautioned the City through a comment letter (October 3, 2012, letter from Patrick McGraner) that water quality in any wetlands must meet the anti-degradation requirement of the State Water Quality standards (Chapter 173-201A WAC). The Ecology letter asserts that, "…applying the water quality standards to wetlands means that all existing beneficial uses (or functions and values) of wetlands cannot be disturbed or must be adequately replaced or compensated if wetlands impacts are unavoidable." To comply with this legal obligation, our ECA code will need a provision for a case-by-case evaluation of all wetlands to determine when impacts are "unavoidable." Approving a size based exemption in the code completely negates the statutory responsibility, and increases the city's exposure to potential litigations and sanctions from the state.

- The Commission received testimony from only one property owner who requested the exemption to be increased to 4,000 square feet. I understand that this property owner is entitled to submit an application for "reasonable use exception'' under the current code. Because the property owner is not denied his/her rights to the reasonable use of the property, there is no need to increase the exemption and cause irreversible damage to our precious wetlands and associated ecosystems.

2. <u>Pilot Programs allowing development in the no-disturbance area (Item 4-15)</u>

I recommend no new developments in the no disturbance area for following reasons:

- Developments on steep slopes along the western perimeter of the city (no-disturbance area) where the highlands descend to Lake Sammamish pose extreme risks from erosion, landslide, and accumulation of pollutants due to the area's geologic, topographic, and hydrologic conditions. This area is already developed in an urban capacity with predominantly single family houses. In addition, the existing code also allows some limited development in no disturbance area for single family homes on pre-existing lots, utility improvements in public right of way, street construction to access existing property, etc. The risks associated with further developments in this area are too high.

- Some property owners and developers voiced their concerns at the Commission Meetings that prohibition of new subdivision and short plats development in the no-disturbance area severely restricts their economic interests. I suggest that the City Council consider employing transfer of development rights (TDR), development density changes, and other innovative land use tools to limit new growth in the no disturbance area, enabling property owners to reap some economic benefits through selling their development rights.

- The city does not require single family homes in the no disturbance area to comply with latest King County Surface Water Manual to implement best management practices for storm water protections (because of a size based exemption in the current city code). Also, no community level storm water conveyance (i.e., tight lines) is available in area to drain storm water directly to the lake. The developments in the no disturbance are should not be lifted until these existing risks are mitigated.

- AMEC's BAS report on erosion hazard areas (page 9) states that, "Generally, best available science for protecting sensitive resources requires buffers and offsets, and does not support increasing risk associated activities proximate to the resources. For these reasons we do not recommend changing the restrictions of SMC 21 A.50.225 (3) (b)." Since there is an unequivocal recommendation, the pilot program serves no valuable purpose in this case. A pilot program is used when there is lack of adequate data to make decisions or a high degree of uncertainty exists about a policy outcome.

If the council moves forward with the pilot program, I would provide following suggestions for improvement:

- The proposed code for the pilot program states its purpose is, "…to evaluate the ability to allow increased development within the no-disturbance area **without adversely affecting the water quality of Lake Sammamish**." However, no metrics are adapted to measure what constitutes "adversely affecting the water quality of Lake Sammamish. " I highly recommend that a volume standard that limits the storm water discharge volumes to match pre-developed forested site conditions is included in any pilot program. Likewise, discharge water from the pilot program projects must meet water quality standards for different parameters (Phosphorus, pH, temperature, turbidity, etc.) based on the current water quality goals of Lake Sammamish.

- The pilot program should be limited to fewer than nine subdivision type projects to avoid any significant level of harm on the water quality of Lake Sammamish. Three to six projects should be adequate to collect sufficient information.

- Pilot program was designed and crafted by individual property owners and their developers to serve their economic interests. The Osgood proposal opposed accepting any water volume standards to protect their maximum economic interests. We must not include projects in the pilot program which cannot agree to install conveyances to limit discharge to match pre-developed conditions.

3. Wildlife Protection (item 2-1 and 2-2, and 2-13c)

Our current ECA code provides for protection of only endangered, threatened, and sensitive species regulated by federal and state laws. BAS report stresses that many other diverse wildlife species consider Sammamish as their habitat or usually accustomed corridor. Citizens of Sammamish highly value the importance of diverse wildlife existence within the city limits and city's comprehensive plan and council adopted city goals support their increased protection. Our BAS consultant, upon synthesis of the current science and regulatory trends in other state and local jurisdictions, recommended that Sammamish consider two possible amendments to its wildlife corridor regulations: identify species of greatest interest and concern to the Sammamish citizens and afford them protection by increasing wildlife corridor widths in those areas not constrained by existing development. The city staff presented evaluation forms (item 2-1 and 2-2) to accomplish this purpose and rated both evaluation forms as having "positive" impact on environment and implementation and as "negative" impact on property. The commission chose to ignore positive ratings for environment and implementation, and recommended not to advance these items. I seriously disagreed with the Commission's decision, because the deviation from BAS recommendation was unjustified, negative impacts on the property was overly inflated, and a "bias" tilted toward protect property rights was exhibited. I urge the Council to reverse the Commission's recommendation and support the overall public interests to retain our unique wildlife habitats and corridors.

The Commission approved an alternative item (2-13c) which would allow the City as part of a development proposal to evaluate habitat protections in high value wetlands and streams with high habitat scores. This alternative wildlife protection approach will ignore protection of many desired species, and limit assessment of habitat protection to only high value wetlands/streams. I could not support the alternative because it was not derived from BAS recommendations and it lacks protection for many wildlife species.

4. Steep Slope Exemption (Item 4-8)

The current regulations allow the city to waive landslide hazard area buffer requirements for slopes greater than 10 feet but less than 20 feet. The BAS report cited a study done by the City of Seattle in 2005 showing that" about 15% of reported landslides had slope height of 20 feet or less." Based on this new and emerging data about landslide risks, the BAS consultant recommended that we eliminate the waiver in our current code for developments in slopes greater than 10 feet. This policy item (4-8 c) rated positive, but majority of the Commission chose to ignore the rating and safety concerns associated with increased landslides, and decided to reject the factual BAS based recommendation. To me, the

Commission's action in this instance demonstrates a disregard to an overwhelming public benefit borne out by scientific data, and shows a strong "bias" to support the economic interests of a few property owners and developers. The Commission also departed from its own decision to not support an item which cannot be rated positive. I simply advise the Council to consider the facts and risks associated with developments in slopes between 10 and 20 feet, and direct the staff to eliminate this exemption.

5. Balance of ECA protection and property use (Item 2-14)

Some property owners requested that the ECA code be revised to not extend the buffer width beyond any structure or building. The BAS does not recommend terminating a required buffer width solely because a structure or building lies on it. The city's current ECA code strikes a balance between ECA protection and property use by limiting modification of a single detached residence to no more than 1,000 square feet over the existing footprint. The Commission has now expanded this flexibility to **any existing building** where there is an intervening building between the addition and the regulated ECA feature. I believe this additional flexibility, over the time, will result in significant loss of buffer widths in already constrained situations. The current flexibility is tied to a single detached residence; any additional flexibility beyond residential uses should not be encouraged.

Thank you for your consideration of our recommendations.

Item 2

MEMORANDUM

DATE: February 7, 2013

TO: City Council
Ben Yazici, City Manager

FROM: Laura Philpot, PE; Public Works Director

RE: Ebright Creek Restoration and Monitoring

At the February 12, 2013 study session, staff will be sharing the successes associated with the recent restoration work that has been completed on Ebright Creek. In addition, staff will be sharing the current and planned water quality monitoring of Ebright Creek.

Ebright Creek Restoration Work:

The City is a member of the Kokanee Work Group (KWG). The goal of the KWG is to attain the full recovery of the kokanee fishery for Lake Sammamish. Recently, a grant was made available to the KWG through Forterra in the amount of $74,000. The City stepped forward to act as the grant administrator. The grant monies included a requirement that they be expended in the 2012 calendar year. The grant focused on restoration of the lower reach of Ebright Creek. The grant had a matching requirement that was met using the cost of the work already performed on the site by the private land owner. No public funds were necessary to satisfy the matching requirement. The work was focused first on completing survey of the stream and surrounding topography and secondly on a stream design for the lower reach of Ebright Creek, and finally, on invasive plant removal and native replanting. The attached report details that work that was completed using the grant.

The restoration work has been considered a huge success based on the record numbers of Kokanee Salmon observed in Ebright Creek returning to spawn.

Next Steps:

While the invasive plant removal was very effective in the areas where it was done; other areas remain to be completed. Staff would like to explore partnering with the King Conservation District (KCD) to complete the invasive species removal for the rest of the site. It is possible that this work can be done without using any City funds. This work would likely be eligible for the KCD jurisdiction grant funding.

Ebright Creek Monitoring:

The City has received a request from Friends of Pine Lake (FOPL) asking for the City to assume the cost of the monitoring that FOPL is currently conducting on Ebright Creek on the Pereyra property. Currently, the City is contracting with RH2 Engineering to perform monitoring for flow and temperature at the site. The additional constituents that FOPL is monitoring are:

turbidity, pH and conductivity. Turbidity and pH can be indicators of development construction pollution, which are concerns of FOPL. The cost of collecting these constituents is significant; driven by the high cost of monthly calibration and servicing.

Developments are required to monitor the turbidity of flows leaving their sites under the NPDES construction permit issued by Ecology. In addition to the normally required monitoring; the two large developments on Ebright Creek, Crossings at Pine Lake and Chestnut Estates, have specific monitoring requirements spelled out on their plat conditions. Staff is working on an ongoing monitoring plan to meet these requirements. So in the future there will be additional monitoring taking place at both sites, and the cost of this monitoring will be borne by the respective home owners associations.

Staff is not recommending the assumption of the additional monitoring costs at the Pereyra property, because of the monitoring that is already required to be conducted at the two development sites above.

EBRIGHT CREEK ENHANCEMENT PROJECT

City of Sammamish Washington

December 21, 2012

Prepared by:

DAVID EVANS AND ASSOCIATES INC.

Ebright Creek Enhancement Plan

Background and Purpose

The City of Sammamish (CITY) is undertaking kokanee salmon (*Oncorhynchus nerka*) restoration on Ebright Creek. This project will complement other on-going work to restore and enhance habitat, reduce and control exotic vegetation, coordinate with recently completed and potential future nearby fish passage improvement projects, and work with property owners to satisfy other related restoration and enhancement needs.

The extent of the total project will reach from the mouth of Ebright Creek at Lake Sammamish upstream approximately 1,000 feet to a former fish passage barrier at a private residence (**Exhibit 1**). The project area varies in width from about 50 feet up to 150 feet from the edge of the stream. The site is under two ownerships, one on either side of East Lake Sammamish Parkway (ELSP). King County is the current lease-holder for the East Lake Sammamish Trail and the CITY is responsible for ELSP.

This technical report describes existing stream conditions, recent work completed, and a plan for additional comprehensive enhancements. The additional detail on enhancements will be established when developing project success factors and goals. Final restoration design and execution would be completed under a separate scope of work and budget.

Exhibit 1. Project Vicinity

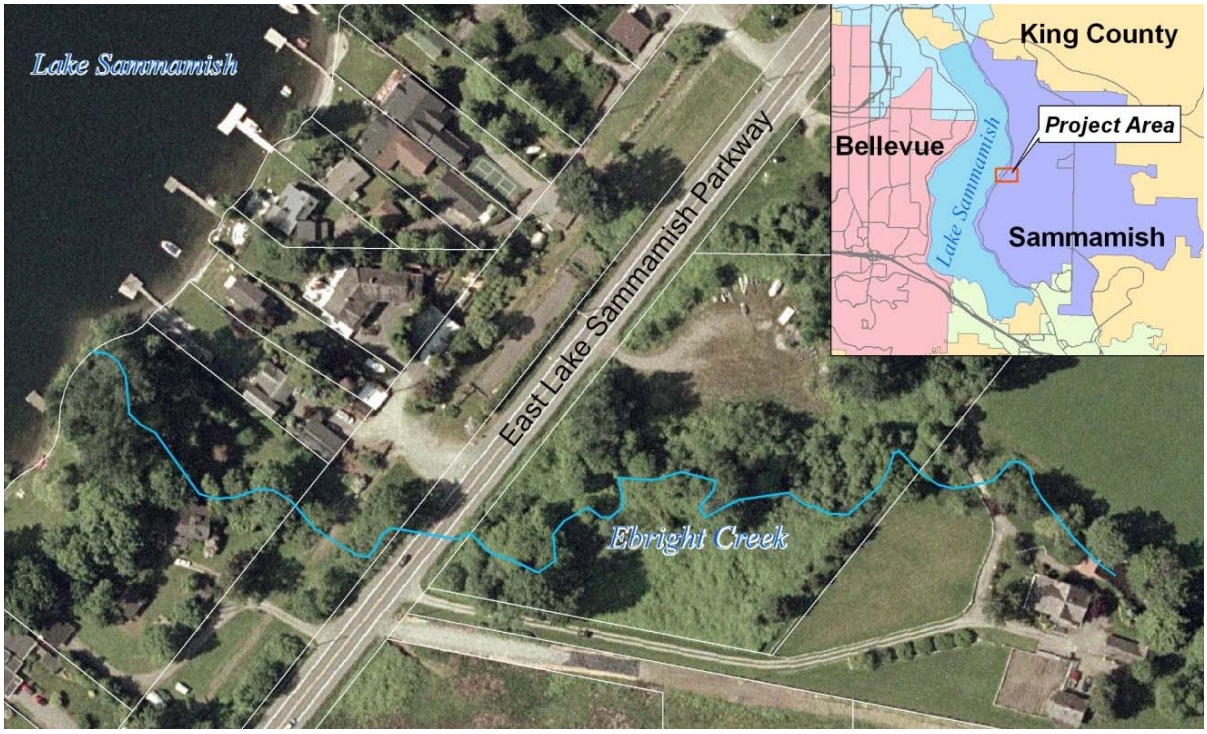

Site Description

Ebright Creek is the main channel for the Thompson Basin, draining east to west from the Sammamish Plateau into Lake Sammamish. This approximately 1.3-square-mile watershed contains an area of mixed residential and institutional uses in the upper watershed and low intensity development in the lower, steeply-sloped areas. The upper wetlands and stream corridors are relatively intact for this moderately developed city, and the basin has a relatively low impervious area, estimated around eight percent.

The geology of the Sammamish Plateau was mapped by the U.S. Geological Survey (USGS) (USGS 2006) and shows a geologic sequence of layered Vashon tills and outwashes with an underlying layer of Pre-Vashon undifferentiated unconsolidated deposits (Qpf) (USGS 2006). The lower reach of Ebright Creek cuts through these Qpf deposits (Sammamish 2011), which is also mapped as a landslide hazard area (Sammamish 2011). The entire project site is mapped as "Mass Wastage Deposits (Qmw)," formed by the erosion of the steep slopes above the site, with soil and landside debris typically up to 10 feet thick (Sammamish 2011). The narrow area between the ELSP and Lake Sammamish is mapped as Alluvium (Qal). The geologic setting in the project area—a stream flowing through landslide hazard areas above a geologically recent colluvium—has a strong influence on the geomorphology of the channel through the project area.

The stream flows through a second-growth forest above the project site through a relatively steep ravine on the side of the plateau. As the stream crosses the project site, it passes through a mixed use area consisting of a single-family residence, pasture, and areas with both native and non-native vegetation. The forest area surrounding the stream is predominately early colonizers such as red alder (*Alnus* rubra) and black cottonwood (*Populus trichocarpa*). After crossing the ELSP, the stream continues through a narrow, shallow ravine to Lake Sammamish. The land uses adjacent to the stream riparian corridor are single-family residential and open space.

Stream habitat through the project reach on the east side of ELSP is in relatively good condition in that the stream has not been extensively ditched or channelized, native riparian vegetation and large woody debris are present, and overall habitat complexity is relatively high for a stream in an urban environment. Adjacent land use activities that have degraded stream habitat conditions are primarily associated with cleared land for pasture and addition of fill material for site access. Native and non-native vegetation have become established in previously disturbed areas, while open pasture is maintained in others.

The stream channel slope through the project area varies between 1.2 and 4.5 percent (**Attachment 1**) with an average slope of 2.7 percent from the replaced culvert to Lake Sammamish. The hydraulic model prepared for the project reach gives a range of 1.0 to 3.4 feet per second average channel velocity at baseflow and range of 1.3 to 4.6 feet per second at the 2-year flow event (**Appendix A**).

Hydrologic conditions for the project reach were determined in the Thomson Sub-Basin Plan (Sammamish 2011) and are summarized in **Exhibit 2**.

Exhibit 2. Ebright Creek Flow Magnitude and Frequency

Return Period	Flow (cfs)
Baseflow	6
2-year	16
5-year	26
10-year	36
25-year	43
50-year	45
100-year	51

Anecdotal hydrologic conditions observed by the project team in the fall of 2012, with its notably long period with no significant rain (early July to mid-October), indicated a robust low flow (**Exhibit 3**) and saturated soils in adjacent riparian areas. The unique geologic and hydrogeologic conditions in the basin area appear to support a healthy low flow regime.

Exhibit 3. Baseflow at the End of an Extended, Dry Summer

A hydraulic model of the project reach was developed using the Hydrologic Engineering Center's River Analysis System (HEC-RAS) version 4.1, developed by the Army Corps of Engineers. Average flow depths were estimated for the baseflow and the 2-, 5-, 10-, 25-, 50-, and 100-year return frequency flows. The structural crossings included in the model are the new box culvert at the upstream end of the project,

the older driveway bridge, the twin culverts under ELSP, and the twin culverts under the East Lake Sammamish Trail (Trail). The water depths for the listed flows are shown in **Exhibit 4**. The water surface profile is shown on **Exhibit 5**. The model summary results are provided in **Appendix A**.

Exhibit 4. Ebright Creek Flow Magnitude and Frequency

Return Period	Flow (cfs)	Flow Depth (ft)
Baseflow	6	0.6
2-year	16	0.9
5-year	26	1.3
10-year	36	1.5
25-year	43	1.7
50-year	45	1.7
100-year	51	1.9

Exhibit 5. Water Surface Profiles from HEC-RAS Model

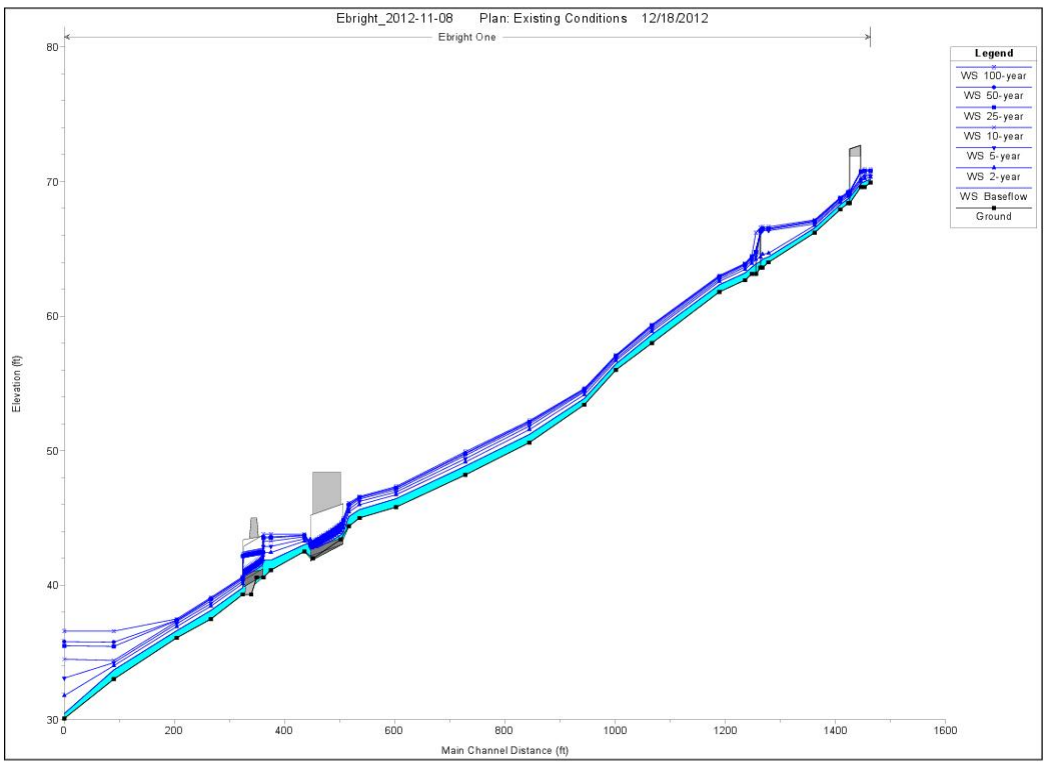

The hydraulic model indicates a flow restriction at the upper driveway bridge, which could cause flows to overtop or bypass the bridge. The two downstream culverts both restrict flow and sediment movement, but not so much as to cause overtopping of the roadway or trail. The flow constriction at these culverts may also hinder fish passage due to high velocities during storm flow.

Enhancement Goals and Approaches

Through the project area, Ebright Creek has many positive habitat attributes that provide spawning and rearing habitat for the Kokanee runs using the project area. The primary project goal is to provide enhancement measures that will continue to support and maintain diverse habitat for Kokanee.

The approach for the site, in general order of priority, is to:

1. Implement active measures to enhance, replenish, rehabilitate, repair, upgrade, and supplement the stream corridor;
2. Seek opportunities to make changes to the existing built environment;
3. Do no harm or that could diminish or reduce existing attributes or preclude future actions;
4. Support a close relationship with land owners for future land protection; and
5. Identify and protect the project area from future anticipated threats.

Completed Work

Several important elements of the project area improvements have been implemented in the past several months. An 18-inch culvert at the upper end of the project area identified as a known barrier to fish passage has been removed and replaced with a 14-foot box culvert (**Exhibit 6**). Recent observations of this fall's Kokanee run have found large numbers of fish upstream of the culvert (FWS 2012) in the high-quality habitat through the intact second-growth forest.

Exhibit 6. Fish Barrier Replaced by Propery Owner

A vegetation management plan has also been developed for the removal of noxious vegetation and infill followed by replanting the project area riparian zone (**Attachments 2a and 2b**). Phase One of the plan, the upstream portion, was completed under a contract with Earthcorps (**Exhibit 7**). Additional before and after pictures at ten photo points are shown in **Appendix B**. Phase Two of the Vegetation Management Plan is intended to be implemented in 2013, but has not yet been funded.

Exhibit 7. Areas Cleared and Planted by Earthcorps

Proposed Enhancement Elements

A conceptual project area enhancement plan was developed to define potential projects for future implementation. Some of the projects are interdependent but in general can be phased and implemented as funding is available. The individual project elements are shown on **Exhibits 8a and 8b** and described below with corresponding numbers. The overall planting and Vegetation Management Plan (**Attachments 2a and 2b**) would be applied to and coordinated with individual enhancement elements.

1. Bridge and Culvert Replacements

There are four stream crossings in the project area. An 18-inch culvert at the upstream end of the project area has been replaced by a new 14-foot box culvert. The next crossing downstream is a small, timber driveway bridge (**Exhibit 9**). This bridge appears to cause a hydraulic restriction at high flows, in large part due to very low clearance over the stream. Proposed alternatives to replace the bridge are shown on **Attachment 3a**. The benefit to the stream would be reduced scour at the bridge, improved habitat under the crossing, and maintaining flood waters in the stream corridor.

The two 36-inch culverts under ELSP show a partial hydraulic restriction to fish passage, although there is no apparent flooding or capacity problem. In addition, the culvert is not well-aligned with the stream path and there is a sharp bend at each end of the culvert. The fourth crossing is another set of two 36-inch culverts under King County's East Lake Sammamish Trail. Like those under ELSP, these culverts also restrict flow and sediment movement and may be partial fish barriers during high flow. The culverts at both crossings are proposed for replacement.

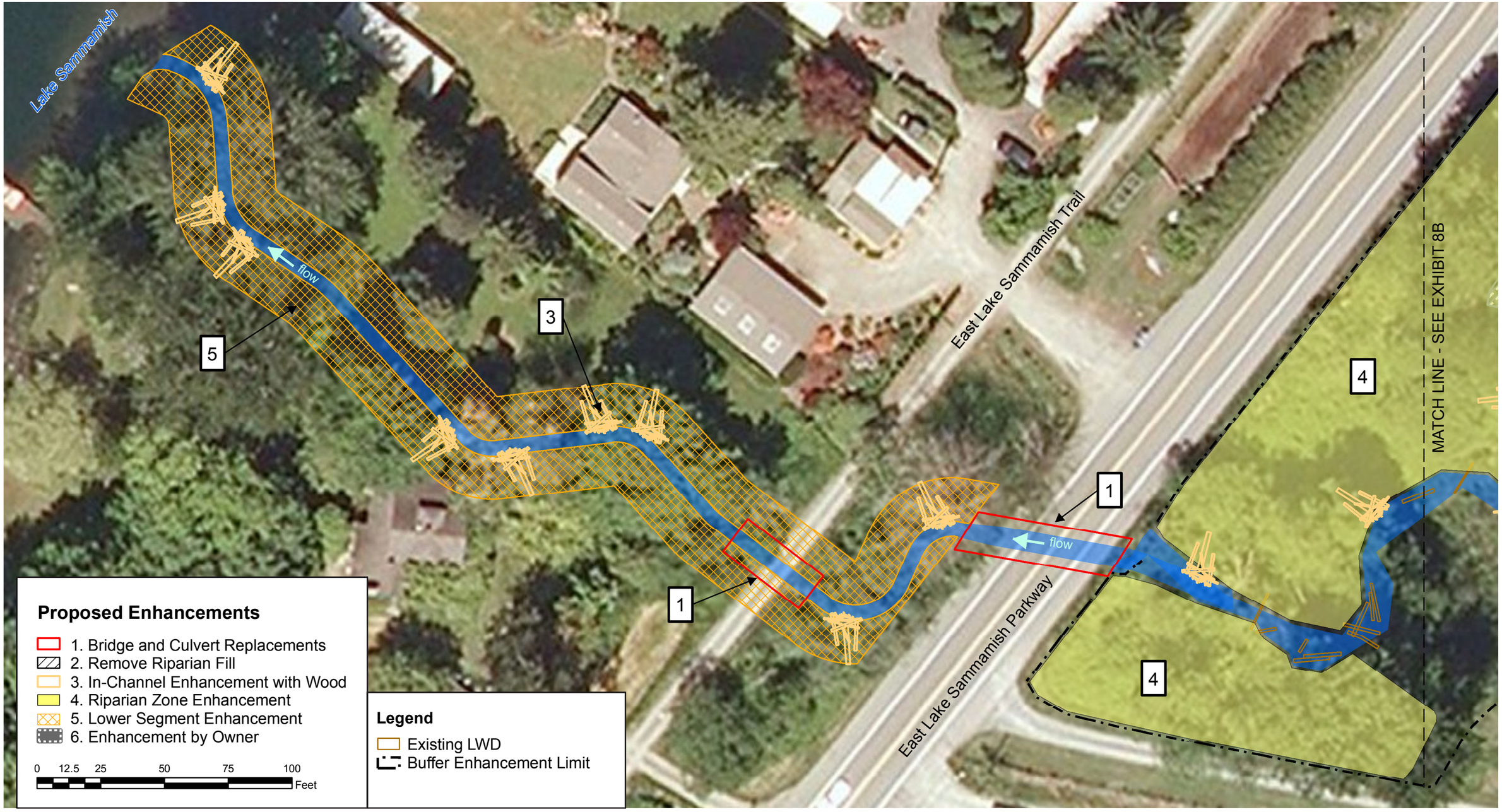

DAVID EVANS AND ASSOCIATES INC.

City of Sammamish Washington

Exhibit 8a

Phase Two Enhancement Plan

Ebright Creek Enhancement Project

City of Sammamish

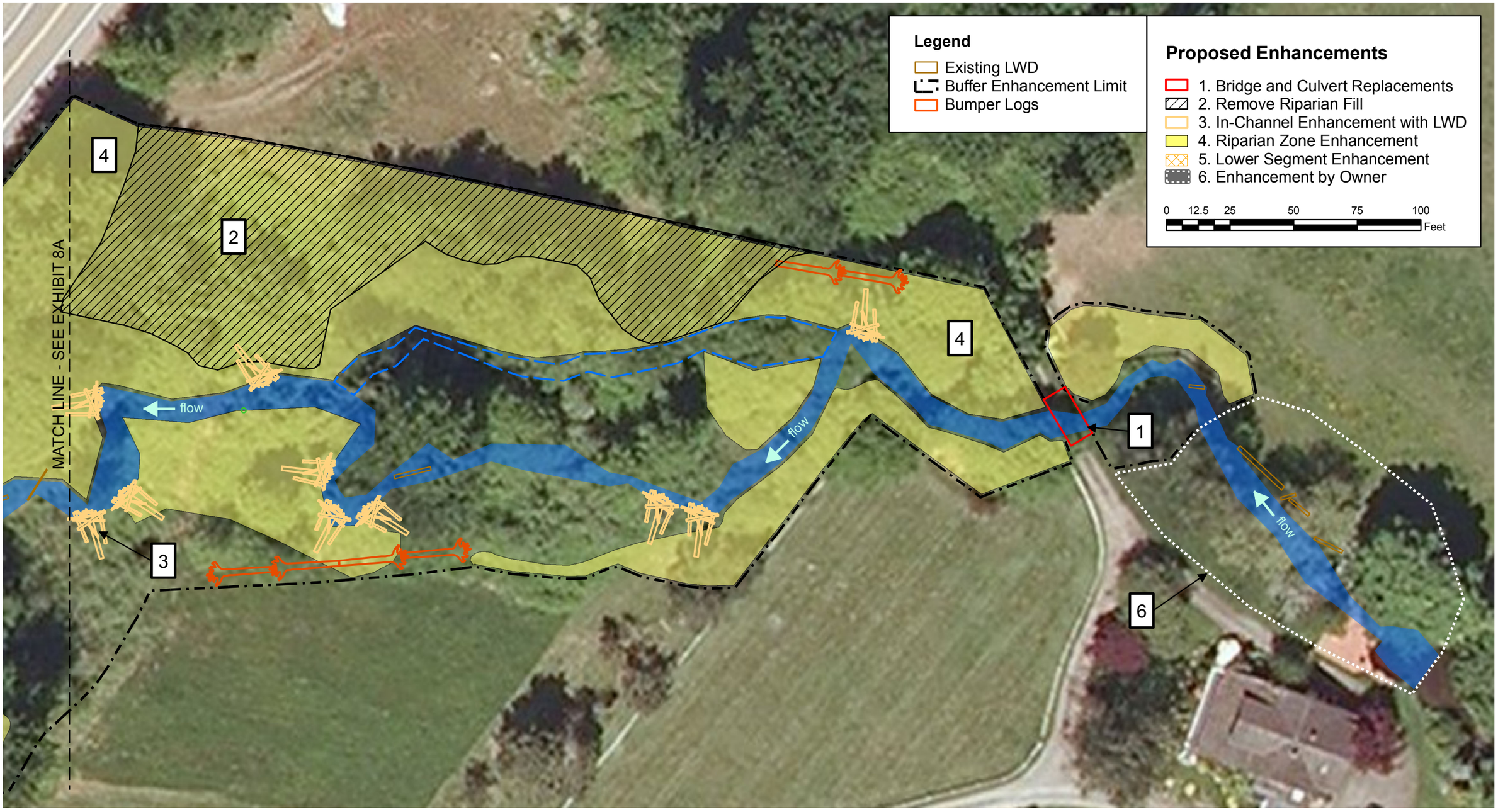

DAVID EVANS AND ASSOCIATES INC.

City of Sammamish Washington

Exhibit 8b
Phase Two Enhancement Plan

Ebright Creek Enhancement Project
City of Sammamish

Exhibit 9. Upper Driveway Bridge that Currently Restricts High Flows

There are three alternatives for proposed replacement that are all shown on **Attachment 3b**. The first is a single 14-foot gravel-bottom culvert for both crossings, realigned to improve the inlet and outlet alignments with the stream course and reduce sharp bends. The additional benefit of this alternative is new stream habitat in the culvert and a single, optimal culvert alignment. The second alternative would use the same alignment but maintain an open segment between the two segments. The third alternative would be two culvert segments but in alternate preferred alignments as shown in **Attachment 3b**. The benefits of alternatives 2 and 3 would be more open stream habitat (in the segment between the culverts) and a potential area where migrating and spawning salmon could be observed from the trail. However, the stream segment between the culverts could be constrained by lack of area and habitat benefits would be limited.

2. Remove Riparian Fill

A portion of the riparian zone on the north side of the stream was apparently filled in the past. Pieces of construction debris were found during the soil hydrology investigation. The proposed enhancement is to remove the area of fill and restore grade and riparian plants. The benefit of the enhancement would be increased riparian wetland-type habitat and additional connected floodplain area. A proposed grading plan is shown on **Attachments 4a and 4b**. Soil enhancement and planting are shown on **Attachments 2a and 2b**.

3. Enhance In-Channel Habitat Complexity with LWD

The complexity of stream habitat between the driveway bridge and ELSP is a good mix of pools and riffles with appropriate sinuosity and large woody debris (LWD). There is some LWD from a variety of

earlier placements, many of which were placed during a King County Enhancement project in the mid-90s. LWD is defined as pieces exceeding 4 inches in diameter and 6.5 feet in length (Fox, et al. 2007). Most of the structures are still and in place and providing the expected channel complexity. However, they are all of the same approximate age and are beginning to breakdown. The existing distribution of LWD for the 770-foot reach between ELSP and the driveway bridge is 28 pieces or 3.6 pieces per 100 feet.

The proposed enhancement is to supplement the reach between the upper driveway bridge and ELSP (**Attachments 5a and 5b**) with additional LWD. The target reference for streams of this size in Western Washington is 12 pieces per 100 feet or 68 pieces for this reach (Fox, et al. 2007). Existing LWD count is about 28 pieces, therefore about 40 pieces of LWD would be added. LWD will be placed in logjam clusters to mimic natural conditions (**Attachment 5c**). Due to the relatively small stream size wood pieces would be anchored by burial or interlocking pieces; no anchors would be used (**Exhibit 10**). The benefit of this enhancement would be new stream structure to further diversify habitat and provide additional cover and pool formation, bank stabilization, and LWD recruitment to replace the older structures.

Exhibit 10. Example of Installed Logjam

4. Riparian Enhancement and Buffers

The vegetation in the stream's riparian area project area has some mature cottonwood, alder, and pacific willow, but lacks conifers. Much of the understory is degraded by invasive species (e.g.,

Himalayan blackberry). The proposed Vegetation Management Plan will upgrade and enhance project area habitat (**Attachment 2a and 2b**). These proposed enhancements will also provide buffers and exclusion zones between the adjacent pasture and stream. The benefit of the riparian planting is to enhance native plant species richness by 1) removing invasive species monocultures, 2) planting 4,068 native shrubs to enhance the riparian understory, and 3) planting 663 conifers to initiate succession.

The stream channel, due to its profile and sediment budget, has been actively braiding and meandering. There is an interest to keep the stream with the defined project corridor. Additional wood placed in strategic locations in the channel migration zone are proposed to arrest and control additional movement in the event that the stream begins significant meandering toward the project edges. A series of partially buried logs will be placed to provide channel structure and bank protection if the channel movement is significant. The structures will provide microhabitat benefits if not needed for stream bank protection. The benefit of this enhancement is to provide reasonable control and protection of the stream corridor for the cooperating property owner.

5. Lower Segment Restoration

The stream segment located downstream of ELSP is somewhat incised and channelized. The riparian cover is good, although it includes many non-native plants and invasive species. Two small pedestrian bridges are constructed well above the peak flood flows. The property is under private ownership. The proposed enhancement is to reshape the channel cross section by laying back the steep banks and reestablishing a floodplain riparian zone with 8:1 benches as can be seen in **Attachment 6**. The benefit would be to provide more diverse channel habitat and potentially improve lower reach spawning by modifying stream energy and reducing scouring and incision.

6. Upper Stream Enhancement

The stream channel near the replaced culvert is currently un-vegetated following construction of the new culvert. (**Exhibit 11**). The owner is preparing a landscape plan for this area to re-vegetate the streambank. The benefit of this restoration is to enhance stream and riparian vegetation while maintaining a plan that is consistent with the owner's use of the area.

Exhibit 11. Current Channel Conditions Downstream of the Newly Replaced Culvert

Additional considerations and Next Steps

The proposed enhancements will require additional funding for implementation. Final designs and permitting are also required for the proposed measures with the exception of the planting enhancement plans. Measures should be considered to further protect the land from direct development impact, such and conservation easements or land purchase. Other upper watershed development should apply appropriate stormwater controls to limit changes in basin hydrology. Roadway discharges with poor water quality should be controlled when feasible.

References

(Fox, et. al 2007). 2006. A Regional and Geomorphic Reference for Quantities and Volumes of Insteam Wood in Unmanaged Forested Basins of Washington State. By Martin Fox and Susan Bolton.

FWS (U.S. Fish & Wildlife Service). 2012. Website Report. http://www.fws.gov/wafwo/LakeSammamishKokanee.html

Sammamish, City of. 2011. Thompson Sub-basin Plan. Prepared by Parametrix, Inc. September.

USGS (U.S. Geologic Survey). 2006. Geologic Map of the Issaquah 7.5' Quadrangle, King County, Washington by Derek B. Booth, Timothy J. Walsh, Kathy Goetz Troost, and Scott A. Shimel.

Appendix A

Hydraulic Study

DAVID EVANS AND ASSOCIATES INC.

MEMORANDUM

DATE: December 5, 2012

TO: Addressee
Addressee's Company and Address

FROM: Karen Comings

SUBJECT: **Ebright Creek Hydraulic Modeling**

PROJECT: COSA00000016 – Ebright Creek

COPIES:

A hydraulic model of Ebright Creek was prepared using the Hydrologic Engineering Center's River Analysis System (HEC-RAS) version 4.1 developed by the Army Corps of Engineers. The model begins at the creek's mouth into Lake Sammamish and extends 1,460 feet upstream through four structural crossings (e.g. bridges or culverts) to about 20 feet above the upstream most culvert.

Flows used in the model were obtained from the Thompson Sub-basin Plan (Sammamish 2011) and are presented in **Exhibit 1**.

Exhibit 1. Ebright Creek Flow Magnitude and Frequency

Return Period	Flow (cfs)
2-year	16
5-year	26
10-year	36
25-year	43
50-year	45
100-year	51

The primary purpose of this model was to determine existing flow patterns along this reach of Ebright Creek, and identify concerns related to existing structures. The existing conditions of the four structural crossings in this reach are as follows:

1. *Upstream Culvert*. The culvert furthest upstream has recently been replaced by a 14-foot-wide concrete box culvert that meets current standards for fish passage and does not restrict flow or sediment movement (**Exhibit 2**).

Exhibit 2. This concrete box culvert replaced a fish barrier and now provides unrestricted passage for water, sediment, and aquatic life.

2. *Driveway Bridge*. The driveway bridge is about 175 feet downstream of the Upstream Culvert. This bridge is an older wooden bridge supported in the center by a log resting on a wooden footing (**Exhibit 3**). This bridge is fish passable; however, the low chord is about a foot and a half from the channel bed causing backwater during high flow. The upstream banks in this area are relatively low so that backwater during high flow can flood open driveway sections of the property.

Exhibit 3. This Driveway Bridge has insufficient clearance for high flows.

3. *East Lake Sammamish Parkway Culvert*. From the Driveway Bridge, the creek flows for approximately 750 feet through an area with forested buffer to the next culvert, which is under East Lake Sammamish Parkway. This culvert is a twin set of 36-inch concrete pipes (**Exhibit 4**). This crossing is fish passable, but the hydraulic capacity is small for the channel and bedload sediment is restricted from migrating downstream. The channel banks in this area are deep enough to contain this backwater so flooding is not a concern.

Exhibit 4. One of the twin culverts under East Lake Sammamish Parkway.

4. *East Lake Sammamish Trail Culvert*. The culvert furthest downstream is another set of two 36-inch culverts that cross under an old railway bed now being used a public trail. Between this crossing and the crossing under East Lake Sammamish Parkway there is roughly 90 feet of open channel. The culverts at this crossing are fish passable, but are small for this stream and cause backwater during high flow. The channel banks in this area are deep enough to contain this backwater so flooding is not a concern.

Modeling results indicate that the Driveway Bridge, the East Lake Sammamish Parkway Culvert, and the East Lake Sammamish Trail Culvert present varying degrees of obstruction to high flows, with the Driveway Bridge increasing the risk of local flooding. While all of these structures are fish passable the higher velocities created by flow constriction and backwater conditions may limit fish movement during high flows.

Replacing these three crossings with structures that meet current design standards would improve passage for fish and other aquatic species, improve the passage of storm flow, reduce the risk of flooding, and allow for normal transportation of sediment through the channel.

The Driveway Bridge can be replaced with either another bridge or a culvert. Either of these structures would resolve the flooding issue at this crossing. Of the two options, the bridge would provide a larger opening under the driving surface. Both options would occupy essentially the same footprint as the existing bridge.

The culverts under East Lake Sammamish Parkway and East Lake Sammamish Trial are close enough to each other that they should be considered in conjunction. The first option is to replace the culverts in their current locations, replacing the twin pipes with a 14-foot concrete box culvert. Currently, the two crossings are not in alignment, so the channel must bend immediately downstream of the road culvert and immediately upstream of the trail culvert. Therefore, the second option is to modify the alignment of the culverts so that they align with each other and remove the bends between the two crossings. The culverts proposed for both crossings are identical14-foot concrete box culverts. Because these culverts are the same size, a third option is proposed whereby one 14-foot concrete box culvert is used to span both the road and the trail as a single crossing. The opening of the proposed culvert is large enough to contain the full width of the creek, which means that fish migrating up this channel would not require burst-speed to cross the culvert. For this reason, the length of this combined culvert is not expected to hinder fish passage.

A summary table of modeling results including flow elevations and velocities can be found in Attachment A.

References

Sammamish, City of. 2011. Thompson Sub-basin Plan. Prepared by Parametrix, Inc. September.

Attachments/Enclosures: modeling output tables and graphs

Initials: KJCO

File Name: P:\c\COSA00000016\0600INFO\EP\EP30 Water Resources\Hydraulic Model\Summary Memo.docx

Attachment A

Model output tables and profile charts

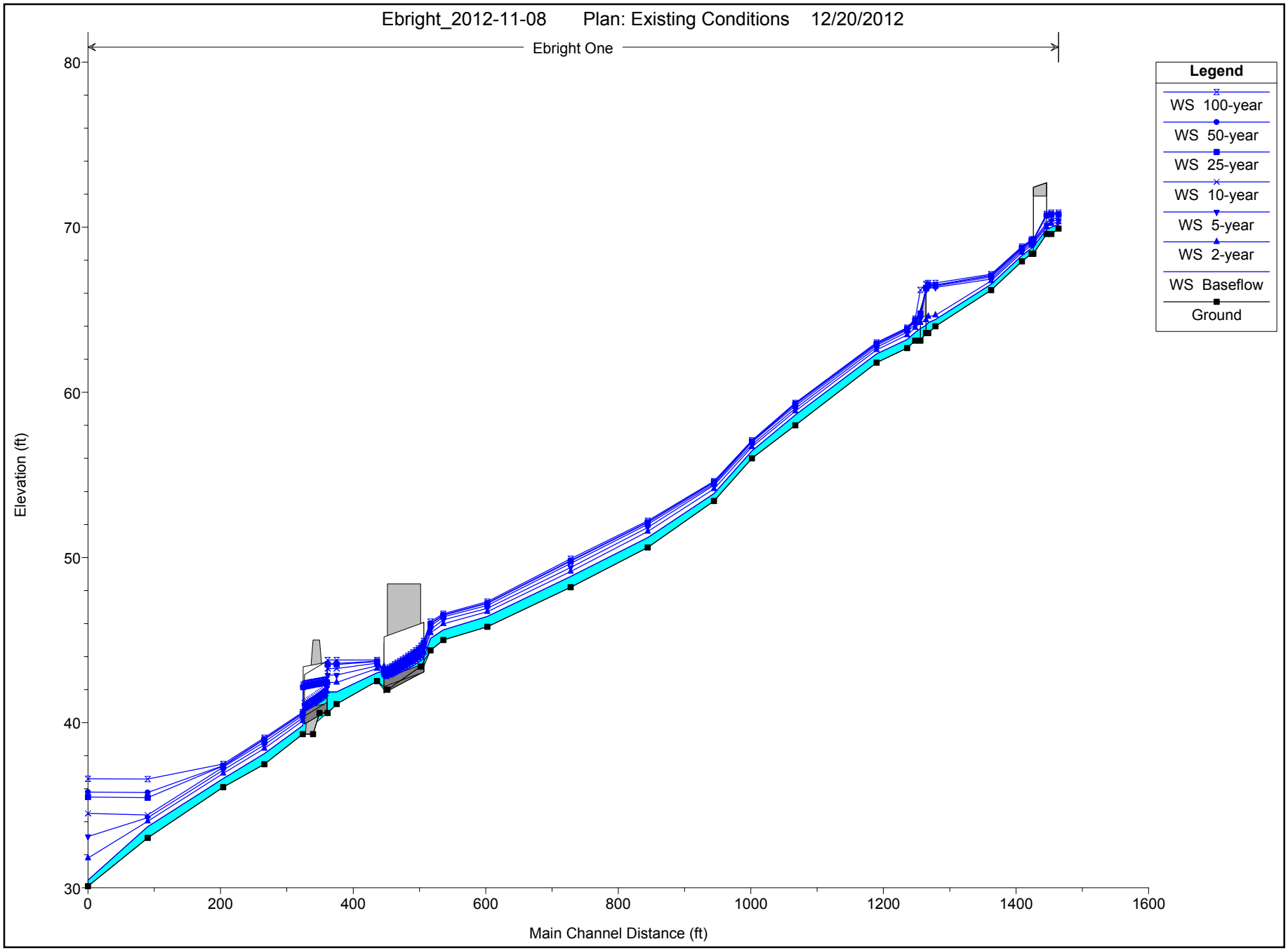
Ebright_2012-11-08 Plan: Existing Conditions 12/20/2012
Ebright One
Legend
WS 100-year
WS 50-year
WS 25-year
WS 10-year
WS 5-year
WS 2-year
WS Baseflow
Ground
Elevation (ft)
80
70
60
50
40
30
0
200
400
600
800
1000
1200
1400
1600
Main Channel Distance (ft)

HEC-RAS Plan: Existing River: Ebright Reach: One

Reach	River Sta	Profile	Q Total	Min Ch El	W.S. Elev	Crit W.S.	E.G. Elev	E.G. Slope	Vel Chnl	Flow Area	Top Width	Froude # Chl
			(cfs)	(ft)	(ft)	(ft)	(ft)	(ft/ft)	(ft/s)	(sq ft)	(ft)	
One	967.42	Baseflow	6.00	69.92	70.17	70.17	70.25	0.033501	2.23	2.69	17.43	1.00
One	967.42	2-year	16.00	69.92	70.32	70.32	70.46	0.027952	3.03	5.29	18.94	1.01
One	967.42	5-year	26.00	69.92	70.43	70.43	70.62	0.024921	3.49	7.46	19.76	1.00
One	967.42	10-year	36.00	69.92	70.54	70.52	70.75	0.020851	3.70	9.73	20.58	0.95
One	967.42	25-year	43.00	69.92	70.78	70.58	70.91	0.007948	2.87	14.96	22.34	0.62
One	967.42	50-year	45.00	69.92	70.81	70.60	70.94	0.007692	2.89	15.59	22.54	0.61
One	967.42	100-year	51.00	69.92	70.89	70.64	71.03	0.007020	2.93	17.43	23.05	0.59
One	956.61	Baseflow	6.00	69.60	70.01	69.87	70.03	0.004496	1.20	5.00	18.22	0.40
One	956.61	2-year	16.00	69.60	70.22	70.02	70.27	0.005024	1.78	8.97	19.54	0.46
One	956.61	5-year	26.00	69.60	70.39	70.13	70.46	0.004807	2.10	12.35	20.20	0.47
One	956.61	10-year	36.00	69.60	70.54	70.23	70.62	0.004627	2.34	15.39	20.78	0.48
One	956.61	25-year	43.00	69.60	70.78	70.29	70.85	0.002706	2.09	20.57	21.89	0.38
One	956.61	50-year	45.00	69.60	70.81	70.31	70.88	0.002713	2.12	21.18	22.03	0.38
One	956.61	100-year	51.00	69.60	70.89	70.36	70.96	0.002740	2.22	22.97	22.50	0.39
One	940		Bridge									
One	926.94	Baseflow	6.00	68.40	68.74	68.74	68.83	0.030125	2.43	2.47	13.04	0.98
One	926.94	2-year	16.00	68.40	68.90	68.90	69.06	0.028378	3.16	5.06	17.11	1.03
One	926.94	5-year	26.00	68.40	69.03	69.03	69.23	0.025410	3.59	7.24	18.65	1.01
One	926.94	10-year	36.00	68.40	69.12	69.12	69.37	0.023591	3.99	9.04	18.82	1.01
One	926.94	25-year	43.00	68.40	69.18	69.18	69.46	0.022561	4.22	10.21	18.92	1.01
One	926.94	50-year	45.00	68.40	69.20	69.20	69.48	0.022458	4.29	10.52	18.94	1.01
One	926.94	100-year	51.00	68.40	69.25	69.25	69.56	0.021875	4.47	11.45	19.01	1.01
One	912.33	Baseflow	6.00	67.93	68.29	68.29	68.38	0.031360	2.40	2.50	13.82	0.99
One	912.33	2-year	16.00	67.93	68.46	68.46	68.62	0.026736	3.19	5.01	15.97	1.00
One	912.33	5-year	26.00	67.93	68.58	68.58	68.80	0.024860	3.71	7.01	16.82	1.01
One	912.33	10-year	36.00	67.93	68.69	68.69	68.95	0.023267	4.10	8.78	17.22	1.01
One	912.33	25-year	43.00	67.93	68.75	68.75	69.04	0.022449	4.32	9.95	17.49	1.01
One	912.33	50-year	45.00	67.93	68.77	68.77	69.07	0.022203	4.38	10.27	17.56	1.01
One	912.33	100-year	51.00	67.93	68.83	68.83	69.15	0.021260	4.52	11.28	17.78	1.00
One	865.79	Baseflow	6.00	66.20	66.54	66.51	66.62	0.017932	2.22	2.70	10.96	0.79
One	865.79	2-year	16.00	66.20	66.75	66.70	66.90	0.017984	3.14	5.09	12.23	0.86
One	865.79	5-year	26.00	66.20	66.85	66.85	67.11	0.023400	4.05	6.42	12.79	1.01
One	865.79	10-year	36.00	66.20	66.99	66.99	67.29	0.021863	4.41	8.16	13.54	1.00
One	865.79	25-year	43.00	66.20	67.07	67.07	67.40	0.021265	4.63	9.28	14.00	1.00

HEC-RAS Plan: Existing River: Ebright Reach: One (Continued)

Reach	River Sta	Profile	Q Total	Min Ch El	W.S. Elev	Crit W.S.	E.G. Elev	E.G. Slope	Vel Chnl	Flow Area	Top Width	Froude # Chl
			(cfs)	(ft)	(ft)	(ft)	(ft)	(ft/ft)	(ft/s)	(sq ft)	(ft)	
One	865.79	50-year	45.00	66.20	67.09	67.09	67.43	0.021112	4.69	9.59	14.12	1.00
One	865.79	100-year	51.00	66.20	67.15	67.15	67.52	0.020722	4.85	10.51	14.48	1.00
One	782.00	Baseflow	6.00	64.00	64.41	64.41	64.55	0.036079	3.04	1.97	6.81	1.00
One	782.00	2-year	16.00	64.00	64.68	64.68	64.93	0.031505	4.07	3.93	7.74	1.01
One	782.00	5-year	26.00	64.00	66.35	64.88	66.37	0.000503	1.13	27.76	44.51	0.15
One	782.00	10-year	36.00	64.00	66.44	65.06	66.47	0.000765	1.45	31.84	45.46	0.19
One	782.00	25-year	43.00	64.00	66.50	65.16	66.54	0.000952	1.65	34.32	46.00	0.21
One	782.00	50-year	45.00	64.00	66.51	65.19	66.55	0.001005	1.70	35.01	46.15	0.22
One	782.00	100-year	51.00	64.00	66.63	65.28	66.67	0.000964	1.74	40.58	47.39	0.22
One	771.15	Baseflow	6.00	63.60	64.23	64.04	64.28	0.008477	1.90	3.15	7.36	0.51
One	771.15	2-year	16.00	63.60	64.59	64.35	64.69	0.008835	2.46	6.52	10.69	0.55
One	771.15	5-year	26.00	63.60	66.35	64.55	66.36	0.000243	0.82	36.74	37.73	0.11
One	771.15	10-year	36.00	63.60	66.45	64.69	66.46	0.000388	1.06	40.22	37.97	0.14
One	771.15	25-year	43.00	63.60	66.50	64.78	66.52	0.000501	1.22	42.31	38.23	0.16
One	771.15	50-year	45.00	63.60	66.52	64.81	66.54	0.000535	1.26	42.89	38.33	0.16
One	771.15	100-year	51.00	63.60	66.63	64.88	66.66	0.000549	1.32	47.48	39.36	0.16
One	760		Bridge									
One	751.52	Baseflow	6.00	63.13	63.63	63.63	63.79	0.036204	3.15	1.90	6.28	1.01
One	751.52	2-year	16.00	63.13	63.92	63.92	64.16	0.031503	3.93	4.07	8.69	1.01
One	751.52	5-year	26.00	63.13	64.12	64.12	64.42	0.029494	4.35	5.97	10.36	1.01
One	751.52	10-year	36.00	63.13	64.28	64.28	64.62	0.028169	4.68	7.69	11.55	1.01
One	751.52	25-year	43.00	63.13	64.37	64.37	64.74	0.027398	4.88	8.81	12.17	1.01
One	751.52	50-year	45.00	63.13	64.40	64.40	64.78	0.027323	4.94	9.11	12.33	1.01
One	751.52	100-year	51.00	63.13	64.47	64.47	64.87	0.026739	5.10	10.00	12.68	1.01
One	739.27	Baseflow	6.00	62.68	63.20	63.11	63.26	0.013391	1.98	3.03	9.59	0.62
One	739.27	2-year	16.00	62.68	63.48	63.33	63.59	0.012911	2.72	5.95	12.76	0.66
One	739.27	5-year	26.00	62.68	63.65	63.51	63.81	0.013134	3.25	8.50	16.43	0.70
One	739.27	10-year	36.00	62.68	63.78	63.65	63.99	0.013841	3.74	10.74	19.13	0.74
One	739.27	25-year	43.00	62.68	63.85	63.74	64.09	0.014571	4.06	12.16	20.67	0.77
One	739.27	50-year	45.00	62.68	63.87	63.76	64.12	0.014716	4.14	12.57	21.06	0.77
One	739.27	100-year	51.00	62.68	63.92	63.83	64.21	0.015237	4.39	13.75	22.18	0.79
One	692.92	Baseflow	6.00	61.80	62.33	62.29	62.44	0.024860	2.65	2.30	8.98	0.84
One	692.92	2-year	16.00	61.80	62.58	62.57	62.76	0.025221	3.52	5.35	15.42	0.91

HEC-RAS Plan: Existing River: Ebright Reach: One (Continued)

Reach	River Sta	Profile	Q Total	Min Ch El	W.S. Elev	Crit W.S.	E.G. Elev	E.G. Slope	Vel Chnl	Flow Area	Top Width	Froude # Chl
			(cfs)	(ft)	(ft)	(ft)	(ft)	(ft/ft)	(ft/s)	(sq ft)	(ft)	
One	692.92	5-year	26.00	61.80	62.72	62.72	62.97	0.025693	4.16	7.83	18.75	0.95
One	692.92	10-year	36.00	61.80	62.85	62.85	63.14	0.024287	4.60	10.38	21.88	0.96
One	692.92	25-year	43.00	61.80	62.93	62.93	63.24	0.023112	4.82	12.28	24.24	0.95
One	692.92	50-year	45.00	61.80	62.95	62.95	63.27	0.022806	4.88	12.84	24.88	0.95
One	692.92	100-year	51.00	61.80	63.02	63.02	63.35	0.021973	5.04	14.50	26.73	0.94
One	600.89	Baseflow	6.00	58.00	58.63	58.63	58.75	0.038984	3.09	2.42	9.48	1.03
One	600.89	2-year	16.00	58.00	58.86	58.86	59.07	0.038710	4.01	5.07	12.98	1.09
One	600.89	5-year	26.00	58.00	59.02	59.02	59.29	0.037820	4.60	7.30	15.13	1.11
One	600.89	10-year	36.00	58.00	59.18	59.18	59.47	0.033594	4.85	9.87	18.09	1.07
One	600.89	25-year	43.00	58.00	59.29	59.29	59.57	0.031145	4.75	12.05	20.94	1.04
One	600.89	50-year	45.00	58.00	59.31	59.31	59.59	0.031358	4.77	12.54	21.55	1.04
One	600.89	100-year	51.00	58.00	59.36	59.36	59.66	0.032926	4.92	13.74	23.01	1.07
One	504.21	Baseflow	6.00	56.00	56.45	56.34	56.52	0.026318	2.65	3.27	10.51	0.83
One	504.21	2-year	16.00	56.00	56.70	56.66	56.84	0.032181	3.85	7.13	20.66	0.97
One	504.21	5-year	26.00	56.00	56.83	56.82	57.01	0.035259	4.40	10.29	25.44	1.04
One	504.21	10-year	36.00	56.00	56.98	56.92	57.15	0.028936	4.44	14.49	31.40	0.97
One	504.21	25-year	43.00	56.00	57.02	57.00	57.23	0.033776	4.91	15.72	33.07	1.06
One	504.21	50-year	45.00	56.00	57.03	57.00	57.25	0.034691	5.02	16.13	33.65	1.07
One	504.21	100-year	51.00	56.00	57.09	57.05	57.31	0.032901	5.07	18.30	36.70	1.06
One	446.99	Baseflow	6.00	53.42	53.87	53.87	54.02	0.070032	3.73	2.19	7.82	1.33
One	446.99	2-year	16.00	53.42	54.15	54.15	54.37	0.051242	4.62	5.04	13.20	1.24
One	446.99	5-year	26.00	53.42	54.37	54.37	54.57	0.044714	4.50	8.65	20.62	1.17
One	446.99	10-year	36.00	53.42	54.45	54.45	54.74	0.054902	5.37	10.37	23.28	1.32
One	446.99	25-year	43.00	53.42	54.55	54.55	54.84	0.044165	5.38	12.97	26.65	1.22
One	446.99	50-year	45.00	53.42	54.58	54.58	54.86	0.042752	5.41	13.61	27.41	1.20
One	446.99	100-year	51.00	53.42	54.62	54.62	54.94	0.044684	5.74	14.76	28.74	1.24
One	347.11	Baseflow	6.00	50.60	51.21	51.14	51.31	0.018779	2.49	2.41	6.94	0.74
One	347.11	2-year	16.00	50.60	51.57	51.42	51.71	0.014086	3.06	5.23	8.77	0.70
One	347.11	5-year	26.00	50.60	51.82	51.62	52.00	0.012806	3.40	7.64	10.08	0.69
One	347.11	10-year	36.00	50.60	52.01	51.79	52.23	0.012366	3.78	9.57	11.07	0.70
One	347.11	25-year	43.00	50.60	52.12	51.90	52.37	0.012356	4.00	10.89	12.13	0.71
One	347.11	50-year	45.00	50.60	52.15	51.92	52.41	0.012456	4.07	11.24	12.37	0.71
One	347.11	100-year	51.00	50.60	52.23	51.99	52.51	0.012674	4.27	12.24	13.30	0.73
One	230.87	Baseflow	6.00	48.20	48.85	48.78	48.98	0.021293	2.96	2.03	4.77	0.80

HEC-RAS Plan: Existing River: Ebright Reach: One (Continued)

Reach	River Sta	Profile	Q Total	Min Ch El	W.S. Elev	Crit W.S.	E.G. Elev	E.G. Slope	Vel Chnl	Flow Area	Top Width	Froude # Chl
			(cfs)	(ft)	(ft)	(ft)	(ft)	(ft/ft)	(ft/s)	(sq ft)	(ft)	
One	230.87	2-year	16.00	48.20	49.16	49.13	49.46	0.027846	4.45	3.60	5.40	0.96
One	230.87	5-year	26.00	48.20	49.40	49.40	49.83	0.029316	5.25	4.95	5.89	1.01
One	230.87	10-year	36.00	48.20	49.64	49.64	50.12	0.028210	5.59	6.43	6.67	1.00
One	230.87	25-year	43.00	48.20	49.77	49.77	50.30	0.026874	5.83	7.44	8.02	0.99
One	230.87	50-year	45.00	48.20	49.82	49.82	50.35	0.026212	5.88	7.77	8.47	0.99
One	230.87	100-year	51.00	48.20	49.93	49.93	50.49	0.024520	6.00	8.84	9.97	0.97
One	104.99	Baseflow	6.00	45.80	46.43	46.33	46.48	0.018928	2.12	4.02	14.00	0.61
One	104.99	2-year	16.00	45.80	46.72	46.54	46.79	0.016832	2.66	8.82	19.39	0.61
One	104.99	5-year	26.00	45.80	46.92	46.69	47.01	0.015858	2.96	13.07	23.19	0.62
One	104.99	10-year	36.00	45.80	47.09	46.81	47.19	0.014843	3.15	17.49	27.76	0.61
One	104.99	25-year	43.00	45.80	47.22	46.87	47.31	0.014214	3.26	21.24	34.02	0.60
One	104.99	50-year	45.00	45.80	47.24	46.89	47.34	0.013935	3.28	22.18	34.74	0.60
One	104.99	100-year	51.00	45.80	47.33	46.94	47.43	0.013402	3.36	25.49	40.01	0.59
One	38.62	Baseflow	6.00	45.00	45.62	45.42	45.66	0.009279	1.68	3.83	10.35	0.44
One	38.62	2-year	16.00	45.00	45.98	45.68	46.05	0.008853	2.25	8.40	15.13	0.46
One	38.62	5-year	26.00	45.00	46.22	45.87	46.31	0.008298	2.60	12.50	18.42	0.47
One	38.62	10-year	36.00	45.00	46.40	46.02	46.51	0.008391	2.92	16.02	20.96	0.48
One	38.62	25-year	43.00	45.00	46.50	46.10	46.63	0.008561	3.13	18.30	22.53	0.49
One	38.62	50-year	45.00	45.00	46.53	46.13	46.66	0.008731	3.20	18.84	22.99	0.50
One	38.62	100-year	51.00	45.00	46.59	46.19	46.74	0.009365	3.43	20.31	24.22	0.52
One	19.31	Baseflow	6.00	44.38	45.10	45.10	45.28	0.056313	3.40	1.76	4.98	1.01
One	19.31	2-year	16.00	44.38	45.44	45.44	45.70	0.048421	4.05	3.95	8.00	1.00
One	19.31	5-year	26.00	44.38	45.64	45.64	45.98	0.043237	4.65	5.76	10.08	0.99
One	19.31	10-year	36.00	44.38	45.84	45.84	46.20	0.034004	4.88	8.18	15.11	0.92
One	19.31	25-year	43.00	44.38	45.96	45.96	46.33	0.029677	4.97	10.31	19.40	0.87
One	19.31	50-year	45.00	44.38	46.00	46.00	46.36	0.028002	4.96	11.09	20.95	0.85
One	19.31	100-year	51.00	44.38	46.12	46.12	46.45	0.023675	4.88	14.00	31.34	0.80
One	19		Culvert									
One	18	Baseflow	6.00	42.51	43.01	43.01	43.15	0.037404	2.99	2.01	7.40	1.01
One	18	2-year	16.00	42.51	43.27	43.27	43.50	0.032011	3.83	4.18	9.39	1.01
One	18	5-year	26.00	42.51	43.44	43.44	43.75	0.029557	4.42	5.88	9.95	1.01
One	18	10-year	36.00	42.51	43.60	43.60	43.96	0.028009	4.86	7.41	10.35	1.01
One	18	25-year	43.00	42.51	43.69	43.69	44.10	0.027194	5.11	8.42	10.60	1.01
One	18	50-year	45.00	42.51	43.72	43.72	44.13	0.026996	5.17	8.70	10.67	1.01

HEC-RAS Plan: Existing River: Ebright Reach: One (Continued)

Reach	River Sta	Profile	Q Total	Min Ch El	W.S. Elev	Crit W.S.	E.G. Elev	E.G. Slope	Vel Chnl	Flow Area	Top Width	Froude # Chl
			(cfs)	(ft)	(ft)	(ft)	(ft)	(ft/ft)	(ft/s)	(sq ft)	(ft)	
One	18	100-year	51.00	42.51	43.79	43.79	44.24	0.026476	5.36	9.52	10.87	1.01
One	13	Baseflow	6.00	41.12	41.86	41.43	41.88	0.001617	1.02	5.86	9.71	0.23
One	13	2-year	16.00	41.12	42.43	41.68	42.46	0.001424	1.31	12.21	12.64	0.23
One	13	5-year	26.00	41.12	42.88	41.86	42.91	0.001214	1.42	18.36	14.98	0.23
One	13	10-year	36.00	41.12	43.27	42.02	43.30	0.000981	1.45	26.10	25.69	0.21
One	13	25-year	43.00	41.12	43.52	42.12	43.55	0.000841	1.44	33.47	33.48	0.20
One	13	50-year	45.00	41.12	43.59	42.15	43.62	0.000804	1.44	35.84	35.63	0.19
One	13	100-year	51.00	41.12	43.79	42.23	43.82	0.000692	1.40	43.84	42.07	0.18
One	11	Baseflow	6.00	40.58	41.86	41.04	41.87	0.000205	0.49	12.36	13.50	0.09
One	11	2-year	16.00	40.58	42.44	41.26	42.45	0.000317	0.78	20.40	14.62	0.12
One	11	5-year	26.00	40.58	42.88	41.40	42.89	0.000354	0.96	27.20	17.15	0.13
One	11	10-year	36.00	40.58	43.27	41.53	43.29	0.000352	1.08	35.05	22.93	0.13
One	11	25-year	43.00	40.58	43.52	41.61	43.54	0.000346	1.13	41.24	27.25	0.13
One	11	50-year	45.00	40.58	43.59	41.63	43.61	0.000344	1.15	43.14	28.48	0.13
One	11	100-year	51.00	40.58	43.79	41.70	43.81	0.000331	1.18	49.33	32.17	0.13
One	10		Culvert									
One	9	Baseflow	6.00	39.31	39.82	39.77	39.93	0.022613	2.73	2.20	6.32	0.81
One	9	2-year	16.00	39.31	40.10	40.07	40.32	0.025444	3.70	4.32	8.54	0.92
One	9	5-year	26.00	39.31	40.28	40.27	40.58	0.027878	4.35	5.98	9.95	0.99
One	9	10-year	36.00	39.31	40.44	40.44	40.79	0.027968	4.73	7.61	11.16	1.01
One	9	25-year	43.00	39.31	40.54	40.54	40.91	0.027244	4.90	8.77	11.94	1.01
One	9	50-year	45.00	39.31	40.56	40.56	40.95	0.027327	4.97	9.06	12.12	1.01
One	9	100-year	51.00	39.31	40.63	40.63	41.04	0.026897	5.15	9.91	12.36	1.01
One	7	Baseflow	6.00	37.48	38.12	38.12	38.29	0.036187	3.28	1.83	5.61	1.01
One	7	2-year	16.00	37.48	38.44	38.43	38.69	0.031202	4.00	4.00	8.14	1.01
One	7	5-year	26.00	37.48	38.64	38.63	38.96	0.027849	4.50	5.78	8.95	0.99
One	7	10-year	36.00	37.48	38.83	38.81	39.19	0.025218	4.81	7.48	9.66	0.96
One	7	25-year	43.00	37.48	38.98	38.91	39.33	0.021465	4.80	8.96	10.23	0.90
One	7	50-year	45.00	37.48	39.00	38.94	39.37	0.021497	4.87	9.24	10.34	0.91
One	7	100-year	51.00	37.48	39.09	39.02	39.48	0.021402	5.04	10.11	10.66	0.91
One	5	Baseflow	6.00	36.09	36.62	36.54	36.72	0.018357	2.59	2.31	6.07	0.74
One	5	2-year	16.00	36.09	36.92	36.84	37.13	0.020328	3.70	4.33	7.06	0.83
One	5	5-year	26.00	36.09	37.13	37.06	37.44	0.021840	4.41	5.89	7.67	0.89

HEC-RAS Plan: Existing River: Ebright Reach: One (Continued)

Reach	River Sta	Profile	Q Total	Min Ch El	W.S. Elev	Crit W.S.	E.G. Elev	E.G. Slope	Vel Chnl	Flow Area	Top Width	Froude # Chl
			(cfs)	(ft)	(ft)	(ft)	(ft)	(ft/ft)	(ft/s)	(sq ft)	(ft)	
One	5	10-year	36.00	36.09	37.30	37.25	37.69	0.023216	4.97	7.24	8.17	0.93
One	5	25-year	43.00	36.09	37.37	37.37	37.84	0.026866	5.52	7.79	8.36	1.01
One	5	50-year	45.00	36.09	37.40	37.40	37.89	0.026718	5.58	8.06	8.45	1.01
One	5	100-year	51.00	36.09	37.50	37.50	38.01	0.026061	5.74	8.88	8.73	1.00
One	3	Baseflow	6.00	33.02	33.70	33.70	33.87	0.035940	3.35	1.79	5.28	1.01
One	3	2-year	16.00	33.02	34.02	34.02	34.28	0.031463	4.12	3.89	7.60	1.02
One	3	5-year	26.00	33.02	34.24	34.24	34.56	0.029149	4.58	5.67	8.90	1.01
One	3	10-year	36.00	33.02	34.41	34.41	34.79	0.027966	4.93	7.30	9.94	1.01
One	3	25-year	43.00	33.02	35.46	34.52	35.52	0.002287	2.05	20.99	16.22	0.32
One	3	50-year	45.00	33.02	35.77	34.55	35.82	0.001356	1.71	26.37	18.10	0.25
One	3	100-year	51.00	33.02	36.59	34.63	36.61	0.000466	1.18	43.14	23.00	0.15
One	1	Baseflow	6.00	30.10	30.46	30.46	30.60	0.036455	2.98	2.01	7.25	1.00
One	1	2-year	16.00	30.10	31.80	30.73	31.81	0.000272	0.73	39.08	79.21	0.11
One	1	5-year	26.00	30.10	33.10	30.92	33.10	0.000027	0.36	142.06	79.21	0.04
One	1	10-year	36.00	30.10	34.50	31.07	34.50	0.000009	0.28	252.95	79.21	0.02
One	1	25-year	43.00	30.10	35.50	31.16	35.50	0.000005	0.25	332.16	79.21	0.02
One	1	50-year	45.00	30.10	35.80	31.18	35.80	0.000005	0.24	355.92	79.21	0.02
One	1	100-year	51.00	30.10	36.60	31.24	36.60	0.000004	0.23	419.29	79.21	0.02

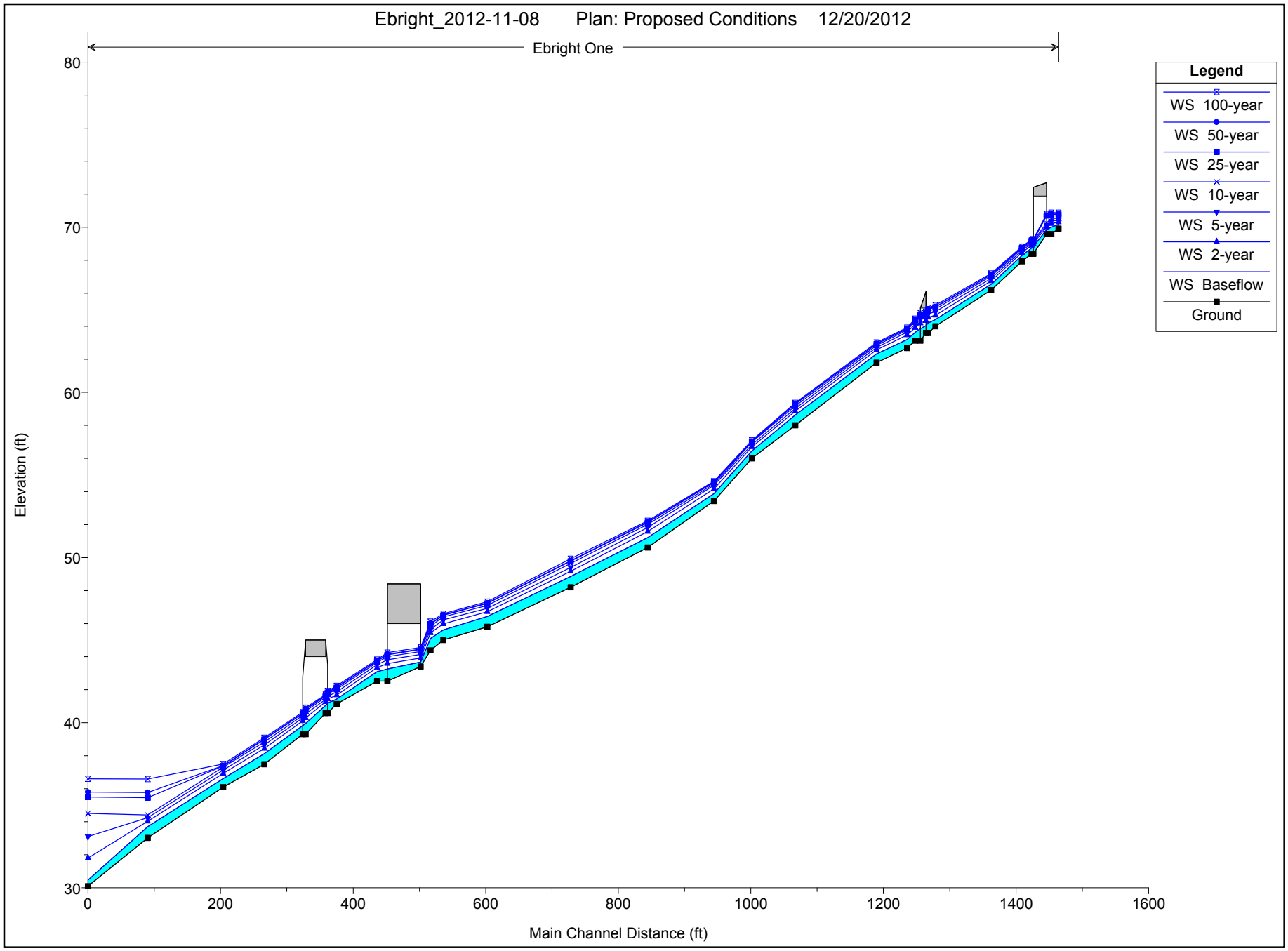
Ebright_2012-11-08 Plan: Proposed Conditions 12/20/2012
Ebright One
Legend
WS 100-year
WS 50-year
WS 25-year
WS 10-year
WS 5-year
WS 2-year
WS Baseflow
Ground
Elevation (ft)
80
70
60
50
40
30
0
200
400
600
800
1000
1200
1400
1600
Main Channel Distance (ft)

HEC-RAS Plan: Proposed River: Ebright Reach: One

Reach	River Sta	Profile	Q Total	Min Ch El	W.S. Elev	Crit W.S.	E.G. Elev	E.G. Slope	Vel Chnl	Flow Area	Top Width	Froude # Chl
			(cfs)	(ft)	(ft)	(ft)	(ft)	(ft/ft)	(ft/s)	(sq ft)	(ft)	
One	967.42	Baseflow	6.00	69.92	70.17	70.17	70.25	0.033501	2.23	2.69	17.43	1.00
One	967.42	2-year	16.00	69.92	70.32	70.32	70.46	0.027952	3.03	5.29	18.94	1.01
One	967.42	5-year	26.00	69.92	70.43	70.43	70.62	0.024921	3.49	7.46	19.76	1.00
One	967.42	10-year	36.00	69.92	70.54	70.52	70.75	0.020851	3.70	9.73	20.58	0.95
One	967.42	25-year	43.00	69.92	70.78		70.91	0.007948	2.87	14.96	22.34	0.62
One	967.42	50-year	45.00	69.92	70.81		70.94	0.007692	2.89	15.59	22.54	0.61
One	967.42	100-year	51.00	69.92	70.89		71.03	0.007020	2.93	17.43	23.05	0.59
One	956.61	Baseflow	6.00	69.60	70.01	69.87	70.03	0.004496	1.20	5.00	18.22	0.40
One	956.61	2-year	16.00	69.60	70.22	70.02	70.27	0.005024	1.78	8.97	19.54	0.46
One	956.61	5-year	26.00	69.60	70.39	70.13	70.46	0.004807	2.10	12.35	20.20	0.47
One	956.61	10-year	36.00	69.60	70.54	70.23	70.62	0.004627	2.34	15.39	20.78	0.48
One	956.61	25-year	43.00	69.60	70.78	70.29	70.85	0.002706	2.09	20.57	21.89	0.38
One	956.61	50-year	45.00	69.60	70.81	70.31	70.88	0.002713	2.12	21.18	22.03	0.38
One	956.61	100-year	51.00	69.60	70.89	70.36	70.96	0.002740	2.22	22.97	22.50	0.39
One	940		Bridge									
One	926.94	Baseflow	6.00	68.40	68.74	68.74	68.83	0.030125	2.43	2.47	13.04	0.98
One	926.94	2-year	16.00	68.40	68.90	68.90	69.06	0.028378	3.16	5.06	17.11	1.03
One	926.94	5-year	26.00	68.40	69.03	69.03	69.23	0.025410	3.59	7.24	18.65	1.01
One	926.94	10-year	36.00	68.40	69.12	69.12	69.37	0.023591	3.99	9.04	18.82	1.01
One	926.94	25-year	43.00	68.40	69.18	69.18	69.46	0.022561	4.22	10.21	18.92	1.01
One	926.94	50-year	45.00	68.40	69.20	69.20	69.48	0.022458	4.29	10.52	18.94	1.01
One	926.94	100-year	51.00	68.40	69.25	69.25	69.56	0.021875	4.47	11.45	19.01	1.01
One	912.33	Baseflow	6.00	67.93	68.29	68.29	68.38	0.031360	2.40	2.50	13.82	0.99
One	912.33	2-year	16.00	67.93	68.46	68.46	68.62	0.026736	3.19	5.01	15.97	1.00
One	912.33	5-year	26.00	67.93	68.58	68.58	68.80	0.024860	3.71	7.01	16.82	1.01
One	912.33	10-year	36.00	67.93	68.69	68.69	68.95	0.023267	4.10	8.78	17.22	1.01
One	912.33	25-year	43.00	67.93	68.75	68.75	69.04	0.022449	4.32	9.95	17.49	1.01
One	912.33	50-year	45.00	67.93	68.77	68.77	69.07	0.022203	4.38	10.27	17.56	1.01
One	912.33	100-year	51.00	67.93	68.83	68.83	69.15	0.021260	4.52	11.28	17.78	1.00
One	865.79	Baseflow	6.00	66.20	66.54		66.62	0.017932	2.22	2.70	10.96	0.79
One	865.79	2-year	16.00	66.20	66.75	66.70	66.90	0.018135	3.15	5.08	12.22	0.86
One	865.79	5-year	26.00	66.20	66.90	66.85	67.11	0.017858	3.70	7.02	13.05	0.89
One	865.79	10-year	36.00	66.20	67.03	66.99	67.29	0.017536	4.10	8.78	13.80	0.91
One	865.79	25-year	43.00	66.20	67.11	67.07	67.41	0.017388	4.33	9.93	14.26	0.91

HEC-RAS Plan: Proposed River: Ebright Reach: One (Continued)

Reach	River Sta	Profile	Q Total	Min Ch El	W.S. Elev	Crit W.S.	E.G. Elev	E.G. Slope	Vel Chnl	Flow Area	Top Width	Froude # Chl
			(cfs)	(ft)	(ft)	(ft)	(ft)	(ft/ft)	(ft/s)	(sq ft)	(ft)	
One	865.79	50-year	45.00	66.20	67.14	67.09	67.44	0.017296	4.39	10.26	14.38	0.91
One	865.79	100-year	51.00	66.20	67.20	67.15	67.52	0.017168	4.55	11.20	14.74	0.92
One	782.00	Baseflow	6.00	64.00	64.41	64.41	64.55	0.036079	3.04	1.97	6.81	1.00
One	782.00	2-year	16.00	64.00	64.68	64.68	64.93	0.031505	4.07	3.93	7.74	1.01
One	782.00	5-year	26.00	64.00	64.88	64.88	65.22	0.029419	4.63	5.61	8.55	1.01
One	782.00	10-year	36.00	64.00	65.06	65.06	65.45	0.027930	5.02	7.16	9.24	1.01
One	782.00	25-year	43.00	64.00	65.16	65.16	65.59	0.027338	5.26	8.17	9.64	1.01
One	782.00	50-year	45.00	64.00	65.19	65.19	65.63	0.027190	5.33	8.45	9.75	1.01
One	782.00	100-year	51.00	64.00	65.28	65.28	65.75	0.026540	5.49	9.29	10.05	1.01
One	771.15	Baseflow	6.00	63.60	64.20	64.04	64.27	0.009918	2.03	2.96	7.07	0.55
One	771.15	2-year	16.00	63.60	64.55	64.35	64.66	0.011060	2.66	6.01	10.33	0.62
One	771.15	5-year	26.00	63.60	64.76	64.55	64.91	0.011189	3.13	8.30	11.22	0.64
One	771.15	10-year	36.00	63.60	64.92	64.69	65.12	0.011557	3.53	10.20	11.71	0.67
One	771.15	25-year	43.00	63.60	65.03	64.78	65.25	0.011768	3.77	11.42	12.03	0.68
One	771.15	50-year	45.00	63.60	65.05	64.81	65.28	0.011824	3.83	11.76	12.11	0.68
One	771.15	100-year	51.00	63.60	65.13	64.88	65.38	0.011966	4.00	12.74	12.36	0.69
One	760		Bridge									
One	751.52	Baseflow	6.00	63.13	63.63	63.63	63.79	0.036204	3.15	1.90	6.28	1.01
One	751.52	2-year	16.00	63.13	63.92	63.92	64.16	0.031503	3.93	4.07	8.69	1.01
One	751.52	5-year	26.00	63.13	64.12	64.12	64.42	0.029494	4.35	5.97	10.36	1.01
One	751.52	10-year	36.00	63.13	64.28	64.28	64.62	0.028169	4.68	7.69	11.55	1.01
One	751.52	25-year	43.00	63.13	64.37	64.37	64.74	0.027398	4.88	8.81	12.17	1.01
One	751.52	50-year	45.00	63.13	64.40	64.40	64.78	0.027323	4.94	9.11	12.33	1.01
One	751.52	100-year	51.00	63.13	64.47	64.47	64.87	0.026739	5.10	10.00	12.68	1.01
One	739.27	Baseflow	6.00	62.68	63.20		63.26	0.013391	1.98	3.03	9.59	0.62
One	739.27	2-year	16.00	62.68	63.48	63.33	63.59	0.012882	2.72	5.96	12.76	0.66
One	739.27	5-year	26.00	62.68	63.65	63.51	63.81	0.013054	3.25	8.52	16.46	0.69
One	739.27	10-year	36.00	62.68	63.78	63.65	63.99	0.013841	3.74	10.74	19.13	0.74
One	739.27	25-year	43.00	62.68	63.85	63.74	64.09	0.014571	4.06	12.16	20.67	0.77
One	739.27	50-year	45.00	62.68	63.87	63.76	64.12	0.014716	4.14	12.57	21.06	0.77
One	739.27	100-year	51.00	62.68	63.92	63.83	64.21	0.015237	4.39	13.75	22.18	0.79
One	692.92	Baseflow	6.00	61.80	62.33	62.29	62.44	0.024860	2.65	2.30	8.98	0.84
One	692.92	2-year	16.00	61.80	62.58	62.57	62.76	0.025319	3.53	5.34	15.40	0.91

HEC-RAS Plan: Proposed River: Ebright Reach: One (Continued)

Reach	River Sta	Profile	Q Total	Min Ch El	W.S. Elev	Crit W.S.	E.G. Elev	E.G. Slope	Vel Chnl	Flow Area	Top Width	Froude # Chl
			(cfs)	(ft)	(ft)	(ft)	(ft)	(ft/ft)	(ft/s)	(sq ft)	(ft)	
One	692.92	5-year	26.00	61.80	62.72	62.72	62.97	0.025895	4.17	7.81	18.72	0.96
One	692.92	10-year	36.00	61.80	62.85	62.85	63.14	0.024287	4.60	10.38	21.88	0.96
One	692.92	25-year	43.00	61.80	62.93	62.93	63.24	0.023112	4.82	12.28	24.24	0.95
One	692.92	50-year	45.00	61.80	62.95	62.95	63.27	0.022806	4.88	12.84	24.88	0.95
One	692.92	100-year	51.00	61.80	63.02	63.02	63.35	0.021973	5.04	14.50	26.73	0.94
One	600.89	Baseflow	6.00	58.00	58.63	58.63	58.75	0.038984	3.09	2.42	9.48	1.03
One	600.89	2-year	16.00	58.00	58.86	58.86	59.07	0.038710	4.01	5.07	12.98	1.09
One	600.89	5-year	26.00	58.00	59.02	59.02	59.29	0.037622	4.59	7.32	15.14	1.11
One	600.89	10-year	36.00	58.00	59.18	59.18	59.47	0.033594	4.85	9.87	18.09	1.07
One	600.89	25-year	43.00	58.00	59.29	59.29	59.57	0.031145	4.75	12.05	20.94	1.04
One	600.89	50-year	45.00	58.00	59.31	59.31	59.59	0.031358	4.77	12.54	21.55	1.04
One	600.89	100-year	51.00	58.00	59.36	59.36	59.66	0.032926	4.92	13.74	23.01	1.07
One	504.21	Baseflow	6.00	56.00	56.45	56.34	56.52	0.026134	2.65	3.28	10.53	0.83
One	504.21	2-year	16.00	56.00	56.70	56.66	56.84	0.032181	3.85	7.13	20.66	0.97
One	504.21	5-year	26.00	56.00	56.83	56.82	57.01	0.035259	4.40	10.29	25.44	1.04
One	504.21	10-year	36.00	56.00	56.98	56.92	57.15	0.028936	4.44	14.49	31.40	0.97
One	504.21	25-year	43.00	56.00	57.02	57.00	57.23	0.033776	4.91	15.72	33.07	1.06
One	504.21	50-year	45.00	56.00	57.03	57.00	57.25	0.034691	5.02	16.13	33.65	1.07
One	504.21	100-year	51.00	56.00	57.09	57.05	57.31	0.032901	5.07	18.30	36.70	1.06
One	446.99	Baseflow	6.00	53.42	53.87	53.87	54.02	0.070834	3.74	2.18	7.80	1.33
One	446.99	2-year	16.00	53.42	54.15	54.15	54.37	0.051242	4.62	5.04	13.20	1.24
One	446.99	5-year	26.00	53.42	54.37	54.37	54.57	0.044714	4.50	8.65	20.62	1.17
One	446.99	10-year	36.00	53.42	54.45	54.45	54.74	0.054902	5.37	10.37	23.28	1.32
One	446.99	25-year	43.00	53.42	54.55	54.55	54.84	0.044165	5.38	12.97	26.65	1.22
One	446.99	50-year	45.00	53.42	54.58	54.58	54.86	0.042752	5.41	13.61	27.41	1.20
One	446.99	100-year	51.00	53.42	54.62	54.62	54.94	0.044684	5.74	14.76	28.74	1.24
One	347.11	Baseflow	6.00	50.60	51.21		51.31	0.018509	2.47	2.42	6.95	0.74
One	347.11	2-year	16.00	50.60	51.57		51.71	0.014173	3.07	5.22	8.76	0.70
One	347.11	5-year	26.00	50.60	51.82		52.00	0.012817	3.41	7.63	10.08	0.69
One	347.11	10-year	36.00	50.60	52.01		52.23	0.012396	3.78	9.56	11.07	0.70
One	347.11	25-year	43.00	50.60	52.12		52.37	0.012277	3.99	10.92	12.15	0.70
One	347.11	50-year	45.00	50.60	52.15		52.41	0.012348	4.06	11.27	12.40	0.71
One	347.11	100-year	51.00	50.60	52.23		52.51	0.012592	4.26	12.27	13.34	0.72
One	230.87	Baseflow	6.00	48.20	48.85		48.98	0.021540	2.97	2.02	4.76	0.80

HEC-RAS Plan: Proposed River: Ebright Reach: One (Continued)

Reach	River Sta	Profile	Q Total	Min Ch El	W.S. Elev	Crit W.S.	E.G. Elev	E.G. Slope	Vel Chnl	Flow Area	Top Width	Froude # Chl
			(cfs)	(ft)	(ft)	(ft)	(ft)	(ft/ft)	(ft/s)	(sq ft)	(ft)	
One	230.87	2-year	16.00	48.20	49.16	49.13	49.46	0.027591	4.43	3.61	5.40	0.96
One	230.87	5-year	26.00	48.20	49.40	49.40	49.83	0.029271	5.25	4.96	5.89	1.01
One	230.87	10-year	36.00	48.20	49.64	49.64	50.12	0.028125	5.59	6.44	6.69	1.00
One	230.87	25-year	43.00	48.20	49.77	49.77	50.30	0.027130	5.85	7.41	7.99	1.00
One	230.87	50-year	45.00	48.20	49.81	49.81	50.35	0.026549	5.90	7.73	8.41	0.99
One	230.87	100-year	51.00	48.20	49.93	49.93	50.49	0.024760	6.02	8.80	9.92	0.97
One	104.99	Baseflow	6.00	45.80	46.43	46.33	46.48	0.018715	2.11	4.04	14.02	0.61
One	104.99	2-year	16.00	45.80	46.72		46.79	0.016832	2.66	8.82	19.39	0.61
One	104.99	5-year	26.00	45.80	46.92		47.01	0.015858	2.96	13.07	23.19	0.62
One	104.99	10-year	36.00	45.80	47.09		47.19	0.014843	3.15	17.49	27.76	0.61
One	104.99	25-year	43.00	45.80	47.22		47.31	0.014214	3.26	21.24	34.02	0.60
One	104.99	50-year	45.00	45.80	47.24		47.34	0.013935	3.28	22.18	34.74	0.60
One	104.99	100-year	51.00	45.80	47.33		47.43	0.013402	3.36	25.49	40.01	0.59
One	38.62	Baseflow	6.00	45.00	45.61		45.66	0.009395	1.68	3.81	10.33	0.44
One	38.62	2-year	16.00	45.00	45.98		46.05	0.008853	2.25	8.40	15.13	0.46
One	38.62	5-year	26.00	45.00	46.22		46.31	0.008298	2.60	12.50	18.42	0.47
One	38.62	10-year	36.00	45.00	46.40		46.51	0.008391	2.92	16.02	20.96	0.48
One	38.62	25-year	43.00	45.00	46.50		46.63	0.008561	3.13	18.30	22.53	0.49
One	38.62	50-year	45.00	45.00	46.53		46.66	0.008731	3.20	18.84	22.99	0.50
One	38.62	100-year	51.00	45.00	46.59		46.74	0.009365	3.43	20.31	24.22	0.52
One	19.31	Baseflow	6.00	44.38	45.10	45.10	45.28	0.056313	3.40	1.76	4.98	1.01
One	19.31	2-year	16.00	44.38	45.44	45.44	45.70	0.048421	4.05	3.95	8.00	1.00
One	19.31	5-year	26.00	44.38	45.64	45.64	45.98	0.043237	4.65	5.76	10.08	0.99
One	19.31	10-year	36.00	44.38	45.84	45.84	46.20	0.034004	4.88	8.18	15.11	0.92
One	19.31	25-year	43.00	44.38	45.96	45.96	46.33	0.029677	4.97	10.31	19.40	0.87
One	19.31	50-year	45.00	44.38	46.00	46.00	46.36	0.028002	4.96	11.09	20.95	0.85
One	19.31	100-year	51.00	44.38	46.12	46.12	46.45	0.023675	4.88	14.00	31.34	0.80
One	19		Bridge									
One	18	Baseflow	6.00	42.51	43.08	43.01	43.17	0.019075	2.37	2.53	7.99	0.74
One	18	2-year	16.00	42.51	43.33	43.27	43.51	0.021227	3.35	4.78	9.65	0.84
One	18	5-year	26.00	42.51	43.50	43.44	43.75	0.022441	4.04	6.44	10.10	0.89
One	18	10-year	36.00	42.51	43.64	43.60	43.96	0.023440	4.58	7.86	10.46	0.93
One	18	25-year	43.00	42.51	43.73	43.69	44.10	0.023941	4.90	8.78	10.69	0.95
One	18	50-year	45.00	42.51	43.75	43.72	44.13	0.024136	4.98	9.03	10.75	0.96

HEC-RAS Plan: Proposed River: Ebright Reach: One (Continued)

Reach	River Sta	Profile	Q Total	Min Ch El	W.S. Elev	Crit W.S.	E.G. Elev	E.G. Slope	Vel Chnl	Flow Area	Top Width	Froude # Chl
			(cfs)	(ft)	(ft)	(ft)	(ft)	(ft/ft)	(ft/s)	(sq ft)	(ft)	
One	18	100-year	51.00	42.51	43.82	43.79	44.24	0.024582	5.23	9.76	10.93	0.97
One	13	Baseflow	6.00	41.12	41.43	41.43	41.56	0.038337	2.91	2.06	7.88	1.00
One	13	2-year	16.00	41.12	41.68	41.68	41.91	0.032612	3.87	4.13	8.98	1.01
One	13	5-year	26.00	41.12	41.86	41.86	42.17	0.030352	4.44	5.86	9.71	1.01
One	13	10-year	36.00	41.12	42.02	42.02	42.38	0.028760	4.82	7.48	10.48	1.00
One	13	25-year	43.00	41.12	42.12	42.12	42.51	0.028074	5.03	8.54	11.01	1.01
One	13	50-year	45.00	41.12	42.15	42.15	42.55	0.027880	5.09	8.84	11.15	1.01
One	13	100-year	51.00	41.12	42.23	42.23	42.65	0.027265	5.24	9.74	11.56	1.01
One	11	Baseflow	6.00	40.58	41.18	41.04	41.22	0.009643	1.65	3.63	11.76	0.52
One	11	2-year	16.00	40.58	41.42	41.26	41.51	0.010584	2.44	6.57	12.64	0.60
One	11	5-year	26.00	40.58	41.59	41.40	41.73	0.011359	2.98	8.73	12.97	0.64
One	11	10-year	36.00	40.58	41.73	41.53	41.91	0.011826	3.39	10.61	13.25	0.67
One	11	25-year	43.00	40.58	41.82	41.61	42.03	0.012070	3.64	11.82	13.42	0.68
One	11	50-year	45.00	40.58	41.85	41.63	42.06	0.012136	3.70	12.15	13.47	0.69
One	11	100-year	51.00	40.58	41.92	41.70	42.15	0.012280	3.88	13.13	13.61	0.70
One	10		Bridge									
One	9	Baseflow	6.00	39.31	39.82		39.93	0.022567	2.72	2.20	6.32	0.81
One	9	2-year	16.00	39.31	40.10	40.07	40.32	0.025444	3.70	4.32	8.54	0.92
One	9	5-year	26.00	39.31	40.28	40.27	40.58	0.027878	4.35	5.98	9.95	0.99
One	9	10-year	36.00	39.31	40.44	40.44	40.79	0.027968	4.73	7.61	11.16	1.01
One	9	25-year	43.00	39.31	40.54	40.54	40.91	0.027244	4.90	8.77	11.94	1.01
One	9	50-year	45.00	39.31	40.56	40.56	40.95	0.027334	4.97	9.06	12.12	1.01
One	9	100-year	51.00	39.31	40.63	40.63	41.04	0.026897	5.15	9.91	12.36	1.01
One	7	Baseflow	6.00	37.48	38.12	38.12	38.29	0.036290	3.28	1.83	5.60	1.01
One	7	2-year	16.00	37.48	38.44	38.43	38.69	0.031205	4.00	4.00	8.14	1.01
One	7	5-year	26.00	37.48	38.64	38.63	38.96	0.027849	4.50	5.78	8.95	0.99
One	7	10-year	36.00	37.48	38.83	38.81	39.19	0.025218	4.81	7.48	9.66	0.96
One	7	25-year	43.00	37.48	38.98	38.91	39.33	0.021349	4.79	8.98	10.24	0.90
One	7	50-year	45.00	37.48	39.01	38.94	39.37	0.021319	4.85	9.27	10.35	0.90
One	7	100-year	51.00	37.48	39.09	39.02	39.48	0.021122	5.02	10.16	10.68	0.91
One	5	Baseflow	6.00	36.09	36.62	36.54	36.72	0.018277	2.59	2.32	6.08	0.74
One	5	2-year	16.00	36.09	36.92		37.13	0.020328	3.70	4.33	7.06	0.83
One	5	5-year	26.00	36.09	37.13	37.06	37.44	0.021840	4.41	5.89	7.67	0.89

HEC-RAS Plan: Proposed River: Ebright Reach: One (Continued)

Reach	River Sta	Profile	Q Total	Min Ch El	W.S. Elev	Crit W.S.	E.G. Elev	E.G. Slope	Vel Chnl	Flow Area	Top Width	Froude # Chl
			(cfs)	(ft)	(ft)	(ft)	(ft)	(ft/ft)	(ft/s)	(sq ft)	(ft)	
One	5	10-year	36.00	36.09	37.30	37.25	37.69	0.023216	4.97	7.24	8.17	0.93
One	5	25-year	43.00	36.09	37.37	37.37	37.84	0.026855	5.52	7.79	8.36	1.01
One	5	50-year	45.00	36.09	37.40	37.40	37.89	0.026709	5.58	8.06	8.45	1.01
One	5	100-year	51.00	36.09	37.49	37.49	38.01	0.026314	5.76	8.85	8.72	1.01
One	3	Baseflow	6.00	33.02	33.70	33.70	33.87	0.035940	3.35	1.79	5.28	1.01
One	3	2-year	16.00	33.02	34.02	34.02	34.28	0.031463	4.12	3.89	7.60	1.02
One	3	5-year	26.00	33.02	34.24	34.24	34.56	0.029149	4.58	5.67	8.90	1.01
One	3	10-year	36.00	33.02	34.41	34.41	34.79	0.027966	4.93	7.30	9.94	1.01
One	3	25-year	43.00	33.02	35.46		35.52	0.002287	2.05	20.99	16.22	0.32
One	3	50-year	45.00	33.02	35.77		35.82	0.001356	1.71	26.37	18.10	0.25
One	3	100-year	51.00	33.02	36.59		36.61	0.000466	1.18	43.14	23.00	0.15
One	1	Baseflow	6.00	30.10	30.46	30.46	30.60	0.036455	2.98	2.01	7.25	1.00
One	1	2-year	16.00	30.10	31.80	30.73	31.81	0.000272	0.73	39.08	79.21	0.11
One	1	5-year	26.00	30.10	33.10	30.92	33.10	0.000027	0.36	142.06	79.21	0.04
One	1	10-year	36.00	30.10	34.50	31.07	34.50	0.000009	0.28	252.95	79.21	0.02
One	1	25-year	43.00	30.10	35.50	31.16	35.50	0.000005	0.25	332.16	79.21	0.02
One	1	50-year	45.00	30.10	35.80	31.18	35.80	0.000005	0.24	355.92	79.21	0.02
One	1	100-year	51.00	30.10	36.60	31.24	36.60	0.000004	0.23	419.29	79.21	0.02

Appendix B

Photo Points

Photo Point 1: Before (October 19, 2012)

Photo Point 1: After buffer enhancement (December 17, 2012)

Photo Point 2: Before (October 19, 2012)

Photo Point 2: (December 17, 2012) Enhancement Proposed in Phase Two

Photo Point 3: Before (October 19, 2012)

Photo Point 3: (December 17, 2012) Enhancement Proposed in Phase Two

Photo Point 4: Before (October 19, 2012)

Photo Point 4: (December 17, 2012) Enhancement Proposed in Phase Two

Photo Point 5: Before (October 19, 2012)

Photo Point 5: After Buffer Enhancement (December 17, 2012)

Photo Point 6: Before (October 19, 2012)

Photo Point 6: After Buffer Enhancement (December 17, 2012)

Photo Point 7: Before (October 19, 2012)

Photo Point 7: After Buffer Enhancement (December 17, 2012)

Photo Point 8: Before (October 19, 2012)

Photo Point 8: After Buffer Enhancement (December 17, 2012)

Photo Point 9: Before (October 19, 2012)

Photo Point 9: After buffer enhancement (December 17, 2012)

Photo Point 10: Before (October 19, 2012)

Photo Point 10: (December 17, 2012) Enhancement Proposed in Phase Two

Attachments

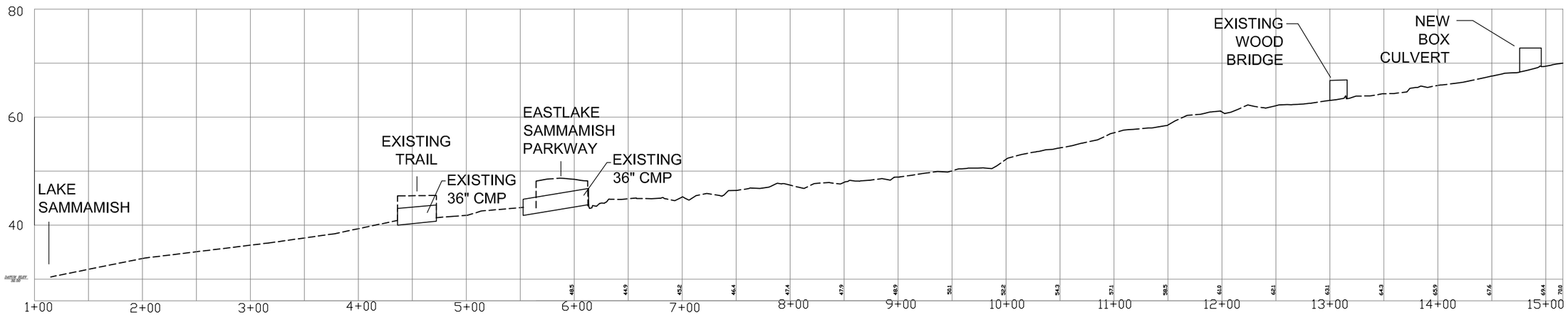

SCALE: V: 1"=50'
H: 1"=20'

EBRIGHT CREEK PROFILE

DAVID EVANS AND ASSOCIATES INC.

City of Sammamish Washington

Attachment 1
Ebright Creek Profile

Ebright Creek Enhancement Project
City of Sammamish

BUFFER ENHANCEMENT PLANT SCHEDULE

BOTANICAL NAME	COMMON NAME	SIZE	COND.	SPACING	REMARKS	PLANTING AREA QUANTITIES (SEE SHEET 1 OF 2) BE-1	BE-2	BE-3	(SEE SHEET 2 OF 2) BE-4	BE-5	BE-6	BE-7	BE-8	BE-9	BE-10	BR-1	BR-2	BR-3	BR-4	TOTAL
TREES																				
THUJA PLICATA	WESTERN RED CEDAR	4' HT MIN.,	5 GAL.	8' O.C.	WELL-BRANCHED, SINGLE TRUNK, STAKED	11	23	45	62	14	5	2	7	6	0	9	7	13	14	218
PICEA STICHENSIS	SITKA SPRUCE	4' HT MIN.,	5 GAL.	8' O.C.	WELL-BRANCHED, SINGLE TRUNK, STAKED	15	36	119	31	13	24	2	7	8	16	0	0	12	10	293
PSEUDOTSUGA MENZIESII	DOUGLAS FIR	4' HT MIN.,	5 GAL.	8' O.C.	WELL-BRANCHED, SINGLE TRUNK, STAKED	0	5	15	82	13	0	0	2	0	9	19	7	0	0	152
CRATAEGUS DOUGLASII	BLACK HAWTHORN	4' HT MIN.,	5 GAL.	4' O.C.	FULL, WELL BRANCHED	11	27	119	30	13	30	0	7	6	9	9	0	28	10	299
SALIX SITCHENSIS	SITKA WILLOW	36" HT MIN.,	LIVE STAKES	18" O.C.	PLANT WILLOWS ONLY WITHIN 10' OF TOP OF BANK	0	0	0	0	321	0	0	0	0	0	0	0	586	0	907
SHRUBS																				
LONICERA INVOLUCRATA	BLACK TWINBERRY	24" HT MIN.,	BARE ROOT/CONTAINER	4' O.C.	FULL, WELL BRANCHED	33	83	267	62	24	45	2	17	16	0	0	0	76	20	645
CORNUS SERICEA	RED OSIER DOGWOOD	24" HT MIN.,	BARE ROOT/CONTAINER	4' O.C.	FULL, WELL BRANCHED	22	55	178	62	40	44	5	17	16	0	0	0	0	0	439
ROSA PISOCARPA	SWAMP ROSE	24" HT MIN.,	BARE ROOT/CONTAINER	4' O.C.	FULL, WELL BRANCHED	6	14	45	248	48	35	2	14	12	78	80	23	76	23	704
RUBUS SPECTABILIS	SALMONBERRY	24" HT MIN.,	BARE ROOT/CONTAINER	4' O.C.	FULL, WELL BRANCHED	17	41	134	0	16	18	2	7	6	0	0	0	0	20	261
PHYSOCARPUS CAPITATUS	PACIFIC NINEBARK	24" HT MIN.,	BARE ROOT/CONTAINER	4' O.C.	FULL, WELL BRANCHED	22	55	178	0	16	35	3	7	12	0	0	0	0	0	328
RIBES SANGUINEUM	RED FLOWERING CURRANT	24" HT MIN.,	BARE ROOT/CONTAINER	4' O.C.	FULL, WELL BRANCHED	11	28	89	248	16	0	0	7	0	26	30	20	0	20	495
SYMPHORICARPOS ALBUS	SNOWBERRY	24" HT MIN.,	BARE ROOT/CONTAINER	4' O.C.	FULL, WELL BRANCHED														20	20
					PLANTING AREA TOTALS	148	367	1,189	825	534	236	18	92	82	138	147	57	791	137	4,761 GRAND TOTAL

SEE NOTES ON SHEET 2

VICINITY MAP

CALL BEFORE YOU DIG
Call: TOLL FREE
1-800-424-5555

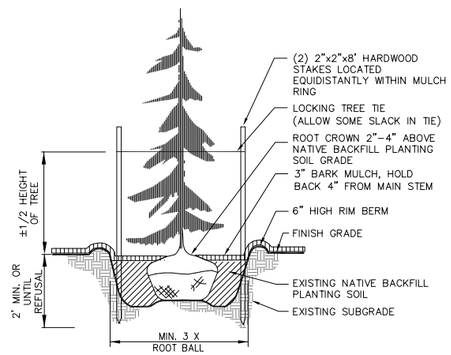

EVERGREEN TREE PLANTING

NOT TO SCALE

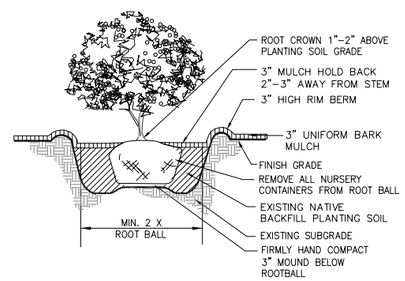

SHRUB PLANTING

NOT TO SCALE

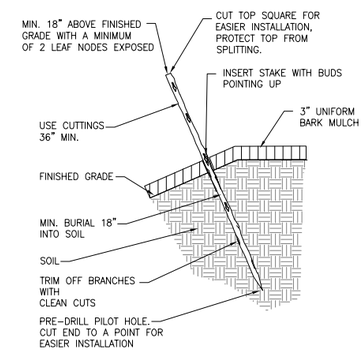

LIVE STAKE PLANTING

NOT TO SCALE

LEGEND

- LIMIT OF WORK
- ORDINARY HIGH WATER MARK (O.H.W.M.)
- CREEK CHANNEL
- EXISTING MINOR CONTOUR (0.5')
- EXISTING MAJOR CONTOUR (2.5')
- EXISTING DECIDUOUS TREE
- EXISTING CONIFEROUS TREE
- EXISTING BANK ROCK ARMOR
- CREEK FLOW

BE — BUFFER ENHANCEMENT AREA:
- UNIFORMLY CLEAR AND GRUB (UNDERSTORY) ALL INVASIVE AND NON-NATIVE PLANTS AND REMOVE FROM SITE
- PLANT NATIVE TREES @ 8' O.C. SPACING AND NATIVE SHRUBS AT 4' O.C. SPACING
- APPLY BARK MULCH TO 3" DEPTH

BE — BUFFER ENHANCEMENT AREA:
- SELECTIVELY CLEAR AND GRUB (UNDERSTORY) ALL INVASIVE AND NON-NATIVE PLANTS AND REMOVE FROM SITE
- INFILL PLANT NATIVE TREES AND SHRUBS @ 8' O.C. SPACING
- APPLY BARK MULCH TO A 3" DEPTH

BR — BUFFER RESTORATION AREA:
- PLANTING ONLY (MAINTAIN EXISTING GROUNDCOVER)
- PLANT NATIVE TREES @ 8' O.C. SPACING AND NATIVE SHRUBS @ 4' O.C. SPACING
- MAINTAIN EXISTING NATIVE GROUNDCOVER AND HERBACEOUS VEGETATION UNLESS OTHERWISE NOTED ON PLAN

VEGETATION PRESERVATION AREA: (DO NOT DISTURB)

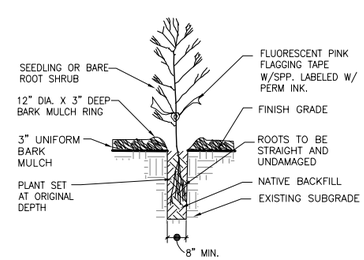

BARE ROOT PLANTING

NOT TO SCALE

0 20 40 80

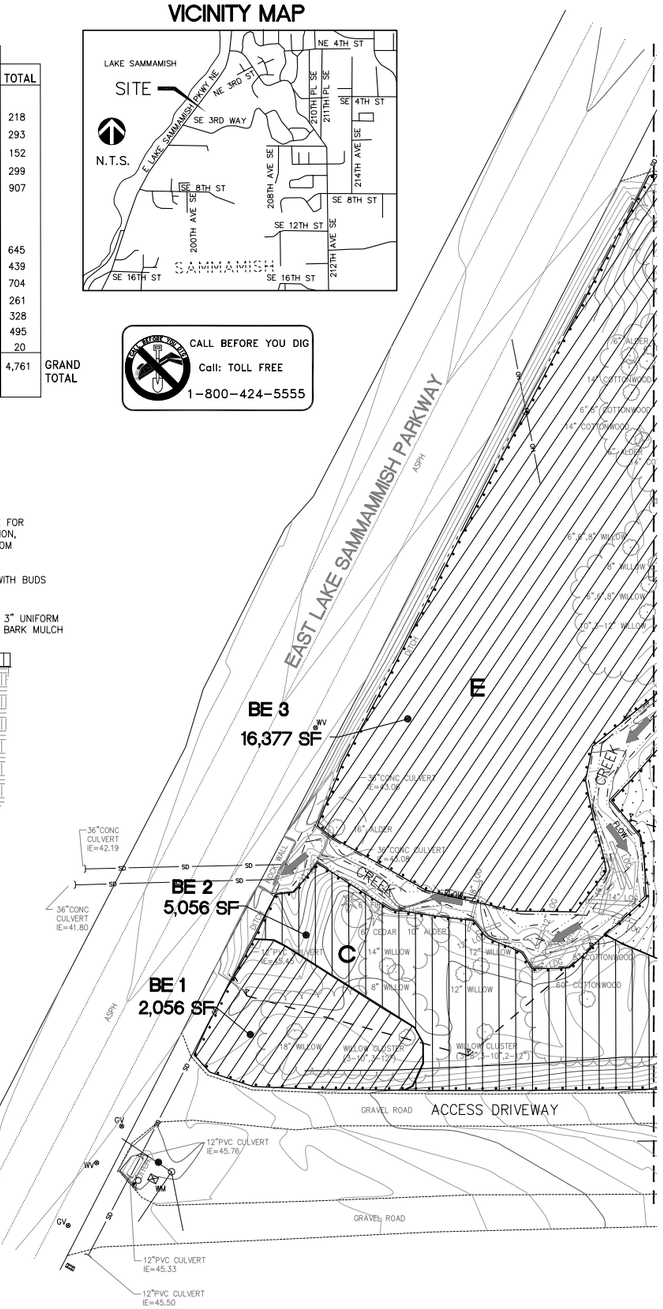

DAVID EVANS AND ASSOCIATES INC.

City of Sammamish Washington

Attachment 2A
Vegetation Management Plan

Ebright Creek Enhancement Project
City of Sammamish

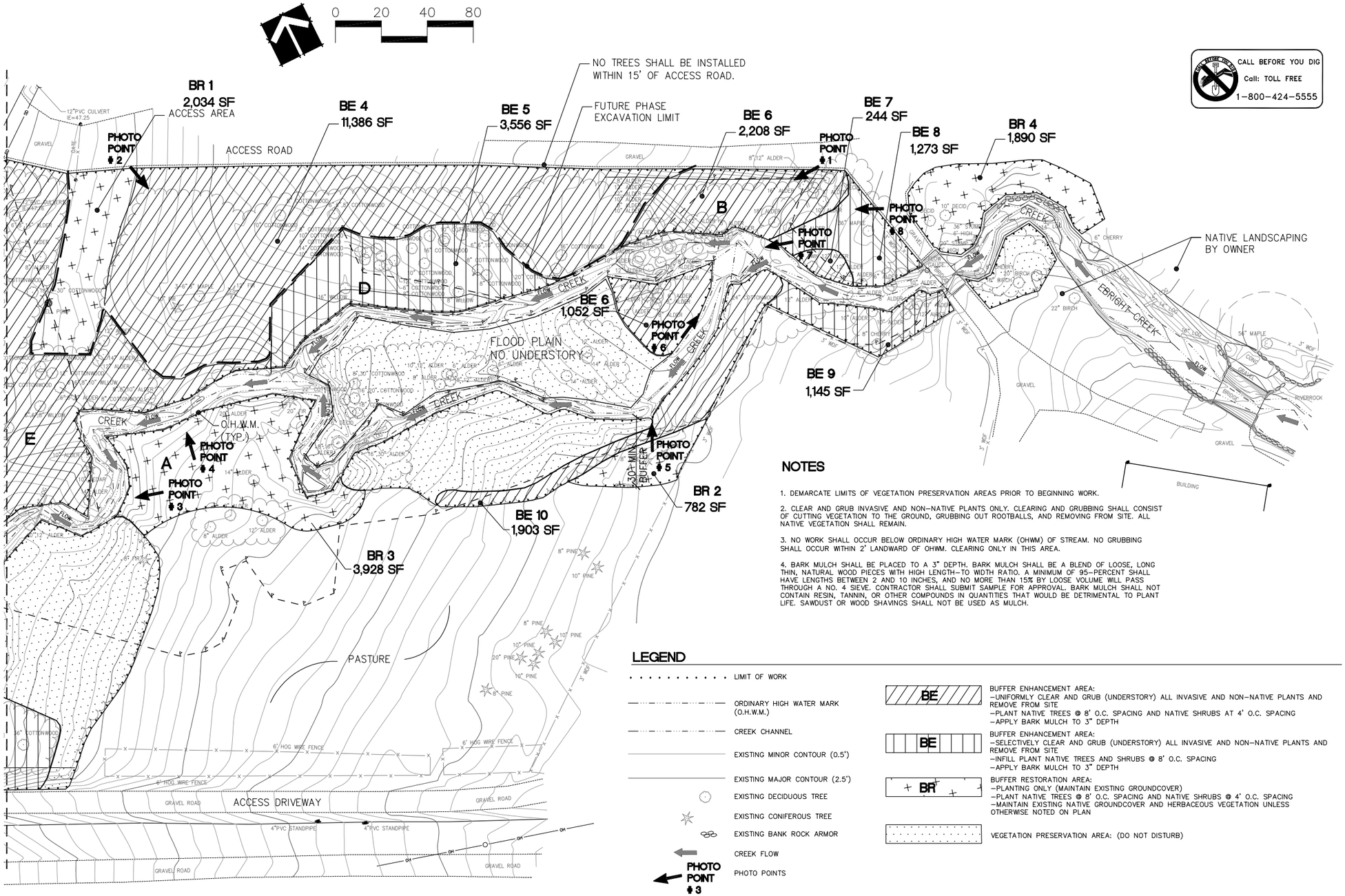

NOTES

1. DEMARCATE LIMITS OF VEGETATION PRESERVATION AREAS PRIOR TO BEGINNING WORK.

2. CLEAR AND GRUB INVASIVE AND NON-NATIVE PLANTS ONLY. CLEARING AND GRUBBING SHALL CONSIST OF CUTTING VEGETATION TO THE GROUND, GRUBBING OUT ROOTBALLS, AND REMOVING FROM SITE. ALL NATIVE VEGETATION SHALL REMAIN.

3. NO WORK SHALL OCCUR BELOW ORDINARY HIGH WATER MARK (OHWM) OF STREAM. NO GRUBBING SHALL OCCUR WITHIN 2' LANDWARD OF OHWM. CLEARING ONLY IN THIS AREA.

4. BARK MULCH SHALL BE PLACED TO A 3" DEPTH. BARK MULCH SHALL BE A BLEND OF LOOSE, LONG THIN, NATURAL WOOD PIECES WITH HIGH LENGTH-TO WIDTH RATIO. A MINIMUM OF 95-PERCENT SHALL HAVE LENGTHS BETWEEN 2 AND 10 INCHES, AND NO MORE THAN 15% BY LOOSE VOLUME WILL PASS THROUGH A NO. 4 SIEVE. CONTRACTOR SHALL SUBMIT SAMPLE FOR APPROVAL. BARK MULCH SHALL NOT CONTAIN RESIN, TANNIN, OR OTHER COMPOUNDS IN QUANTITIES THAT WOULD BE DETRIMENTAL TO PLANT LIFE. SAWDUST OR WOOD SHAVINGS SHALL NOT BE USED AS MULCH.

LEGEND

- LIMIT OF WORK
- ORDINARY HIGH WATER MARK (O.H.W.M.)
- CREEK CHANNEL
- EXISTING MINOR CONTOUR (0.5')
- EXISTING MAJOR CONTOUR (2.5')
- EXISTING DECIDUOUS TREE
- EXISTING CONIFEROUS TREE
- EXISTING BANK ROCK ARMOR
- CREEK FLOW
- PHOTO POINT #3 — PHOTO POINTS
- BE — BUFFER ENHANCEMENT AREA:
  - UNIFORMLY CLEAR AND GRUB (UNDERSTORY) ALL INVASIVE AND NON-NATIVE PLANTS AND REMOVE FROM SITE
  - PLANT NATIVE TREES @ 8' O.C. SPACING AND NATIVE SHRUBS AT 4' O.C. SPACING
  - APPLY BARK MULCH TO 3" DEPTH
- BE — BUFFER ENHANCEMENT AREA:
  - SELECTIVELY CLEAR AND GRUB (UNDERSTORY) ALL INVASIVE AND NON-NATIVE PLANTS AND REMOVE FROM SITE
  - INFILL PLANT NATIVE TREES AND SHRUBS @ 8' O.C. SPACING
  - APPLY BARK MULCH TO 3" DEPTH
- BR — BUFFER RESTORATION AREA:
  - PLANTING ONLY (MAINTAIN EXISTING GROUNDCOVER)
  - PLANT NATIVE TREES @ 8' O.C. SPACING AND NATIVE SHRUBS @ 4' O.C. SPACING
  - MAINTAIN EXISTING NATIVE GROUNDCOVER AND HERBACEOUS VEGETATION UNLESS OTHERWISE NOTED ON PLAN
- VEGETATION PRESERVATION AREA: (DO NOT DISTURB)

DAVID EVANS AND ASSOCIATES INC.

City of Sammamish Washington

Attachment 2B
Vegetation Management Plan

Ebright Creek Enhancement Project
City of Sammamish

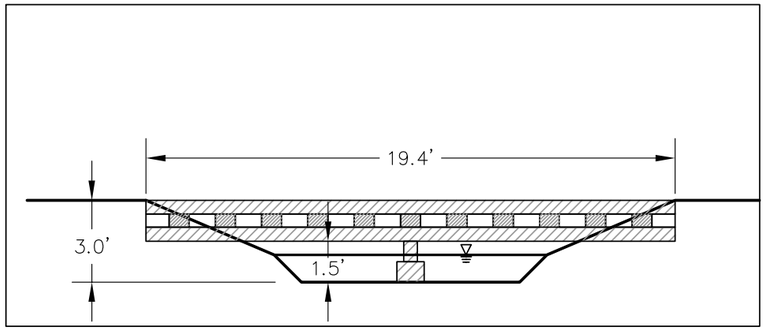

EXISTING BRIDGE

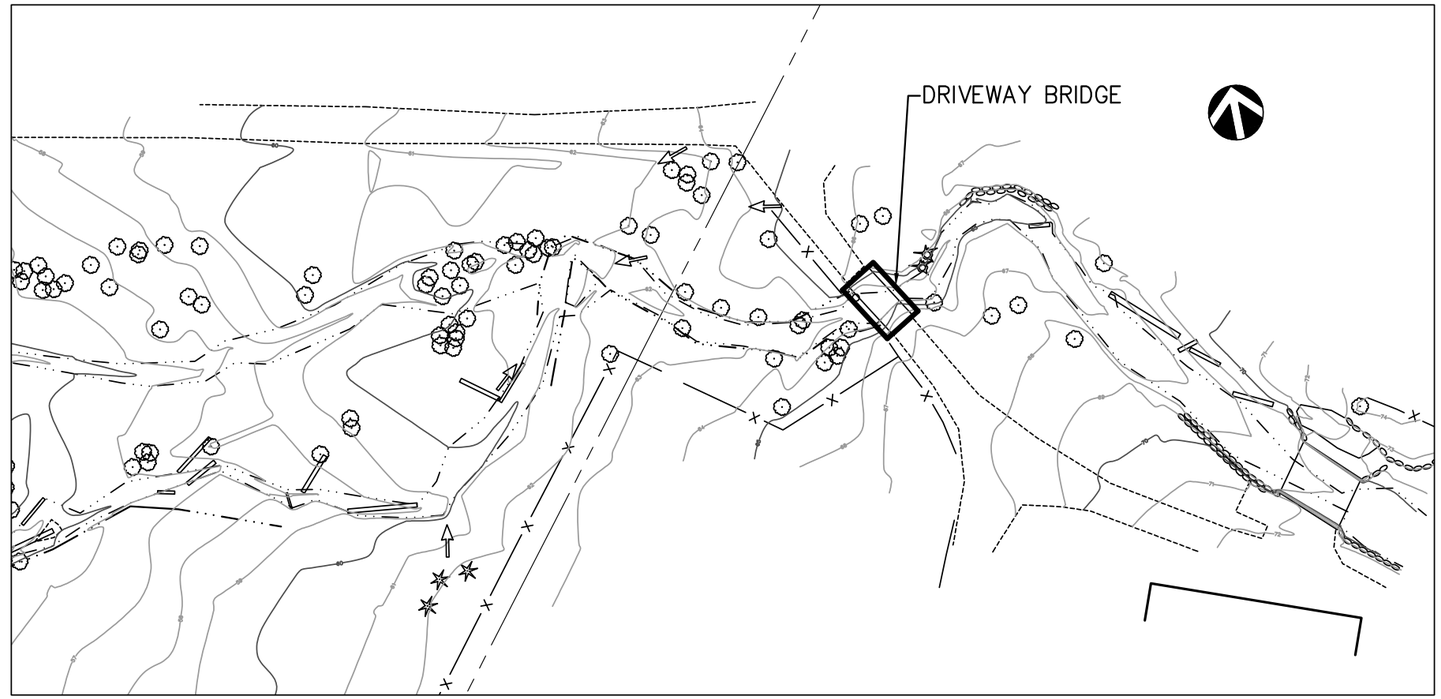

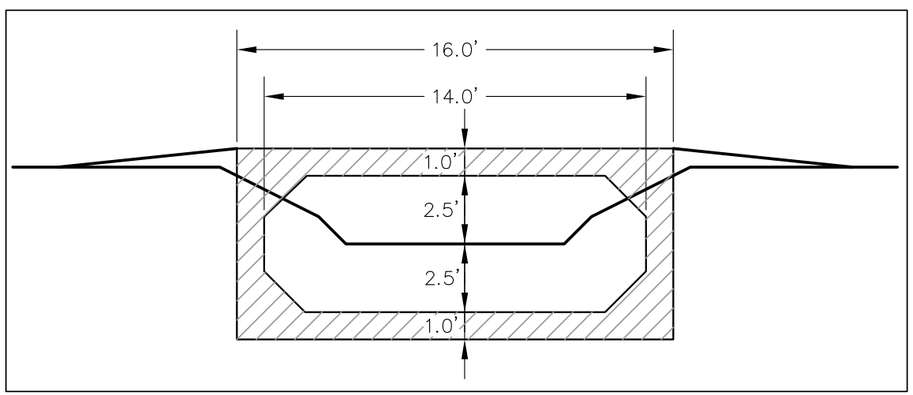

CULVERT OPTION

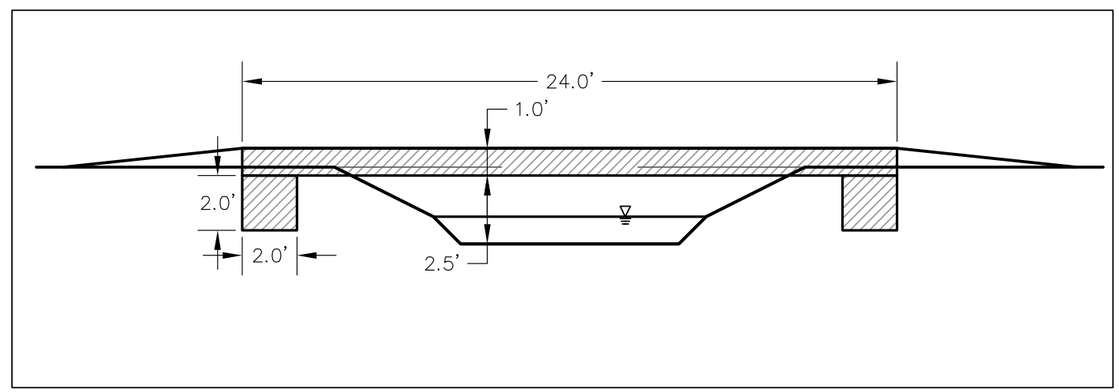

BRIDGE OPTION

DAVID EVANS AND ASSOCIATES INC.

City of Sammamish Washington

Attachment 3A
Culvert Replacement Options

Ebright Creek Enhancement Project
City of Sammamish

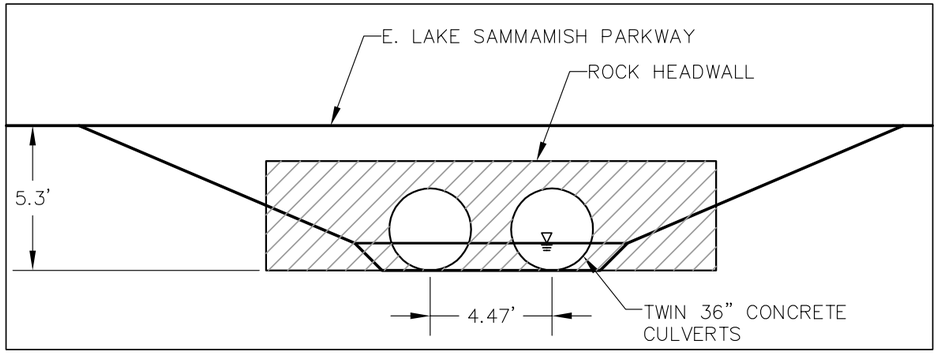

EXISTING CULVERTS

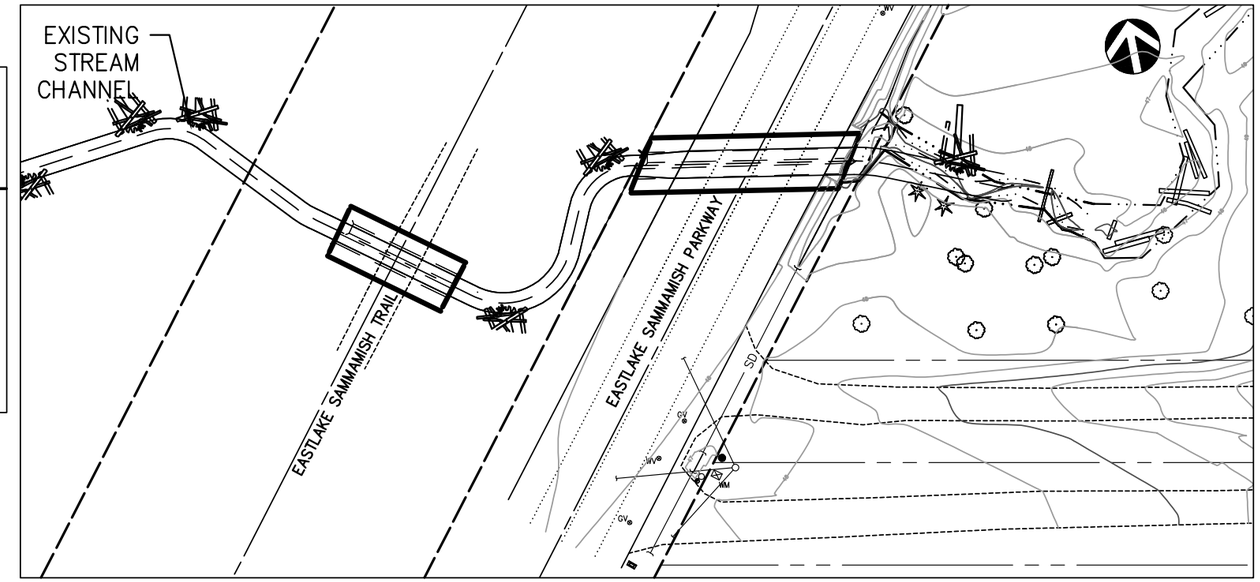

MINIMAL CHANNEL ALTERATION OPTION

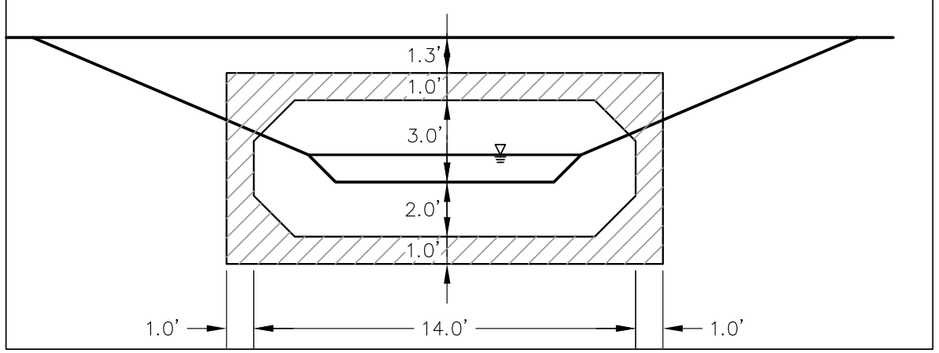

PROPOSED CULVERT

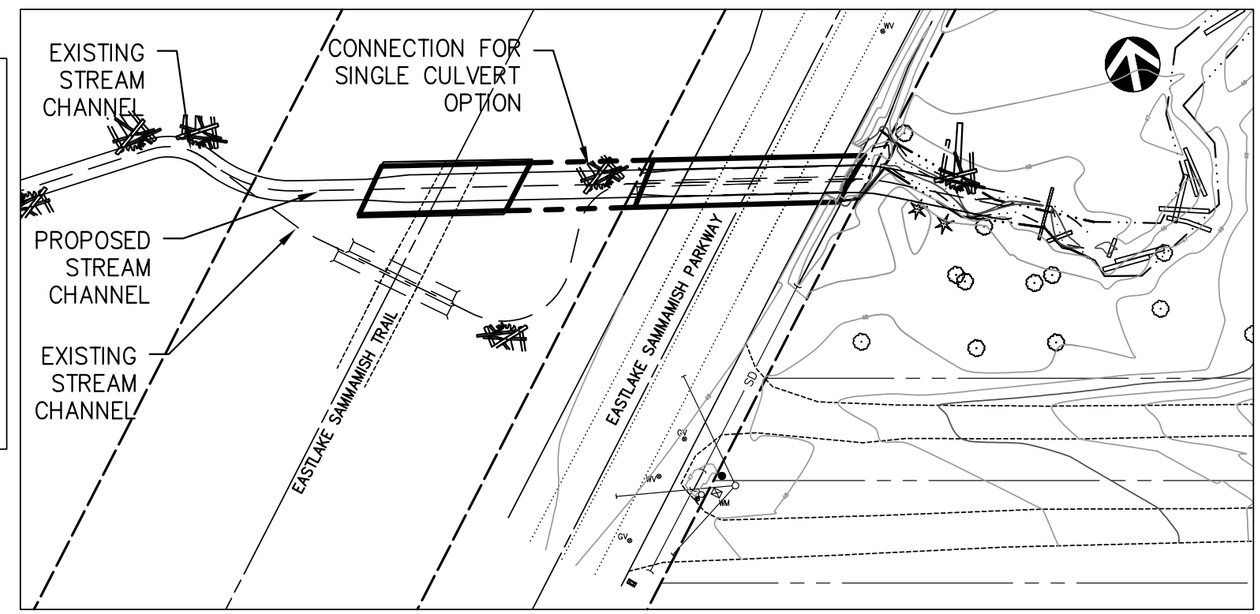

CULVERT/CHANNEL RE-ALIGNMENT WITH SINGLE OR DOUBLE CULVERT OPTIONS

DAVID EVANS AND ASSOCIATES INC.

City of Sammamish Washington

Attachment 3B
Culvert Replacement Options

Ebright Creek Enhancement Project
City of Sammamish

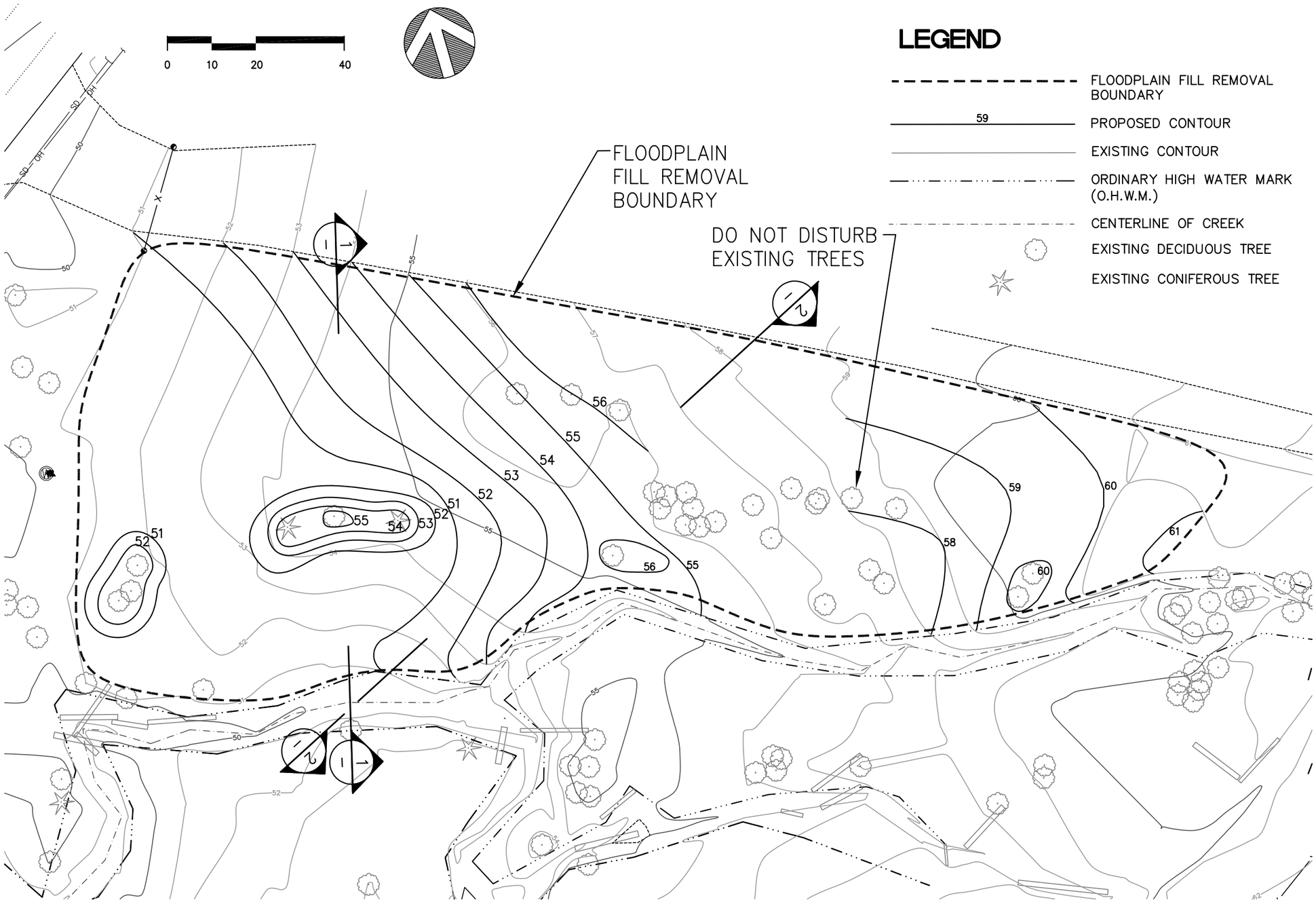

DAVID EVANS AND ASSOCIATES INC.

City of Sammamish Washington

Attachment 4A

Grading Plan for Fill Removal

Ebright Creek Enhancement Project

City of Sammamish

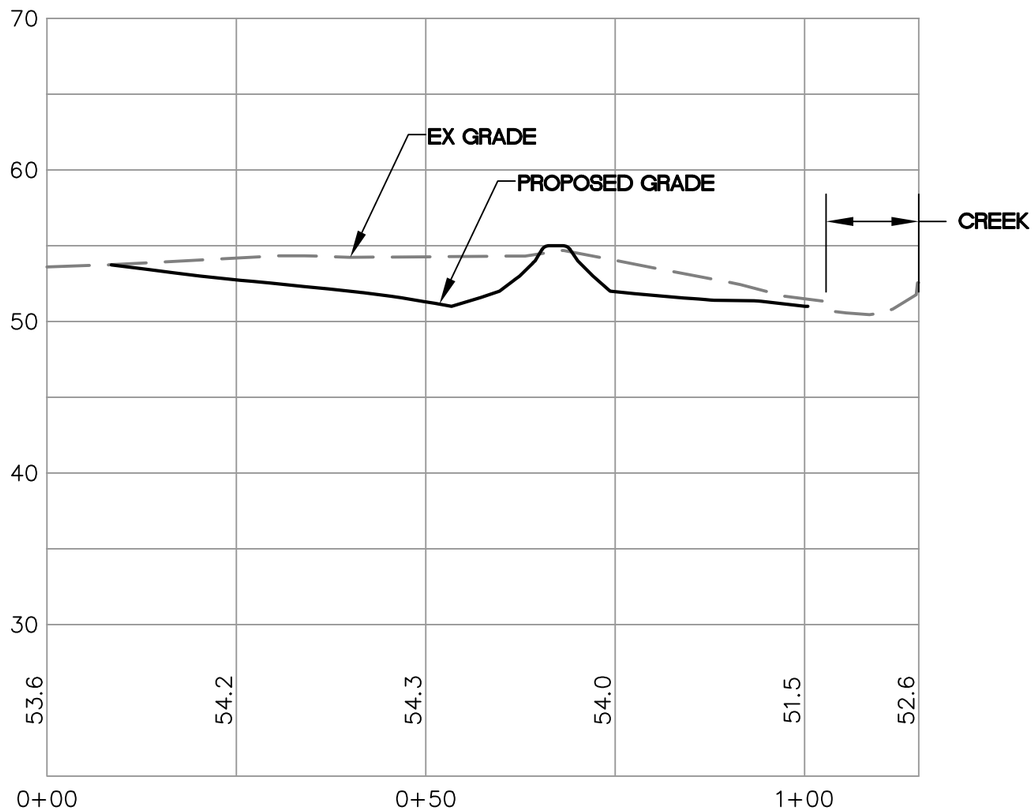

SCALE: V: 1"=10'
H: 1"=20'

FILL REMOVAL SECTION 1-1

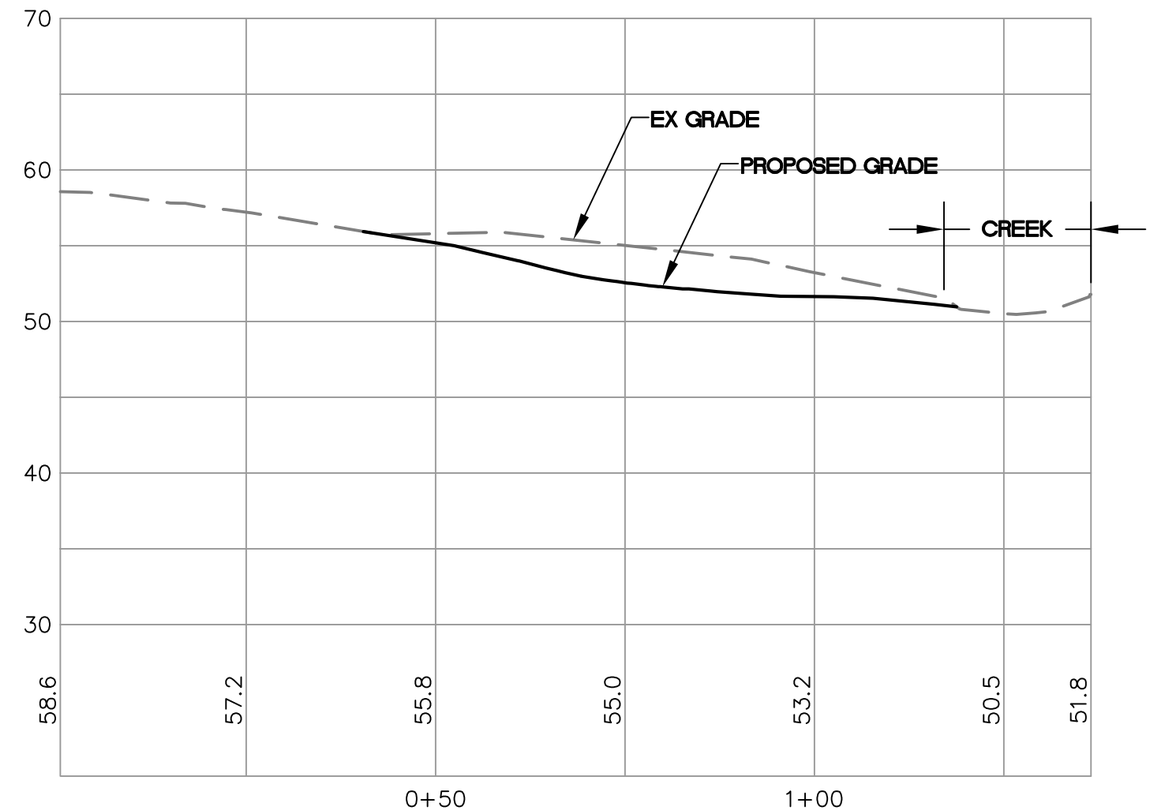

SCALE: V: 1"=10'
H: 1"=20'

FILL REMOVAL SECTION 2-2

DAVID EVANS AND ASSOCIATES INC.

City of Sammamish Washington

Attachment 4B
Grading Plan for Fill Removal

Ebright Creek Enhancement Project
City of Sammamish

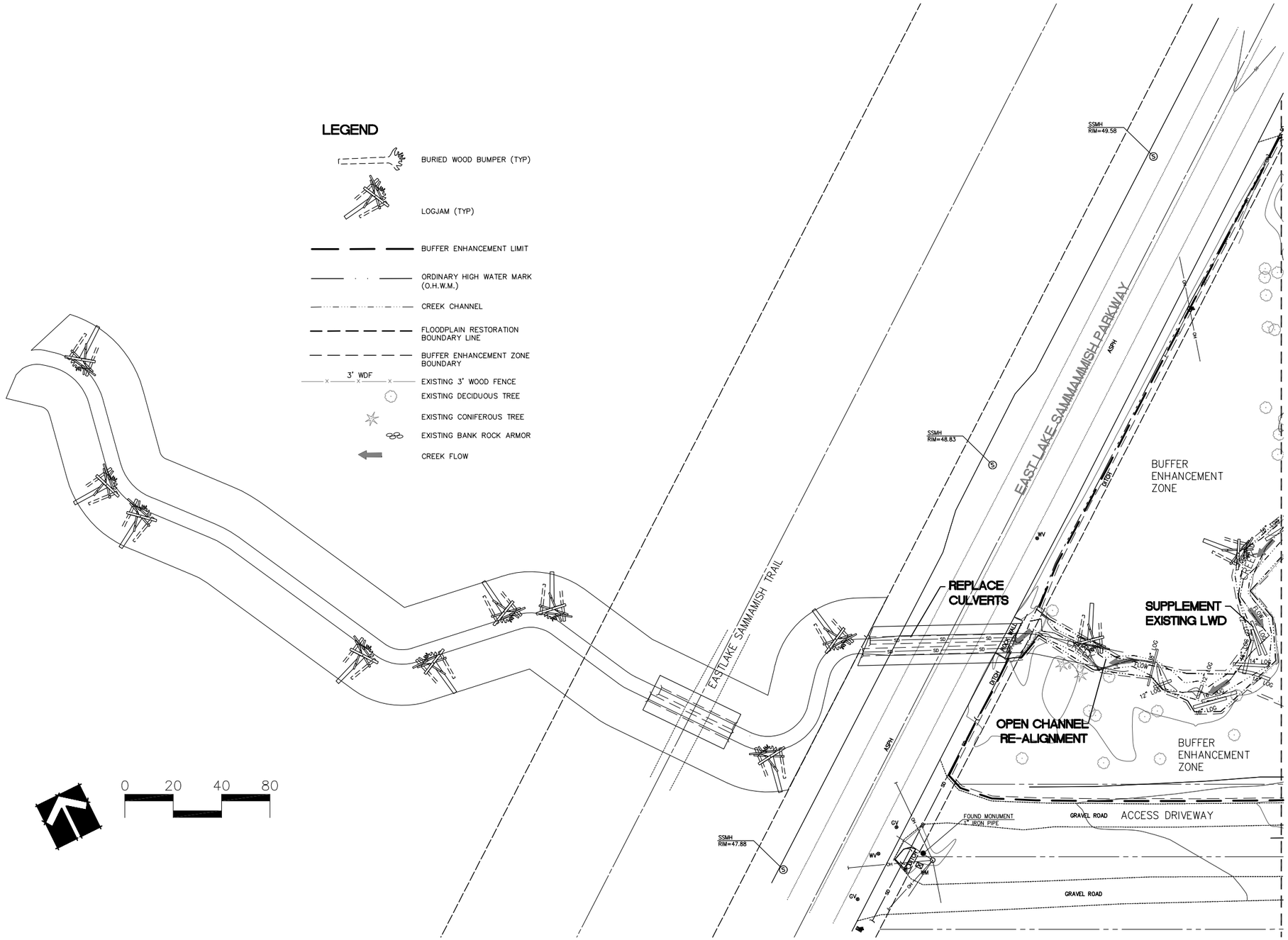

DAVID EVANS AND ASSOCIATES INC.

City of Sammamish Washington

Attachment 5A

Wood Replacement Plan

Ebright Creek Enhancement Project

City of Sammamish

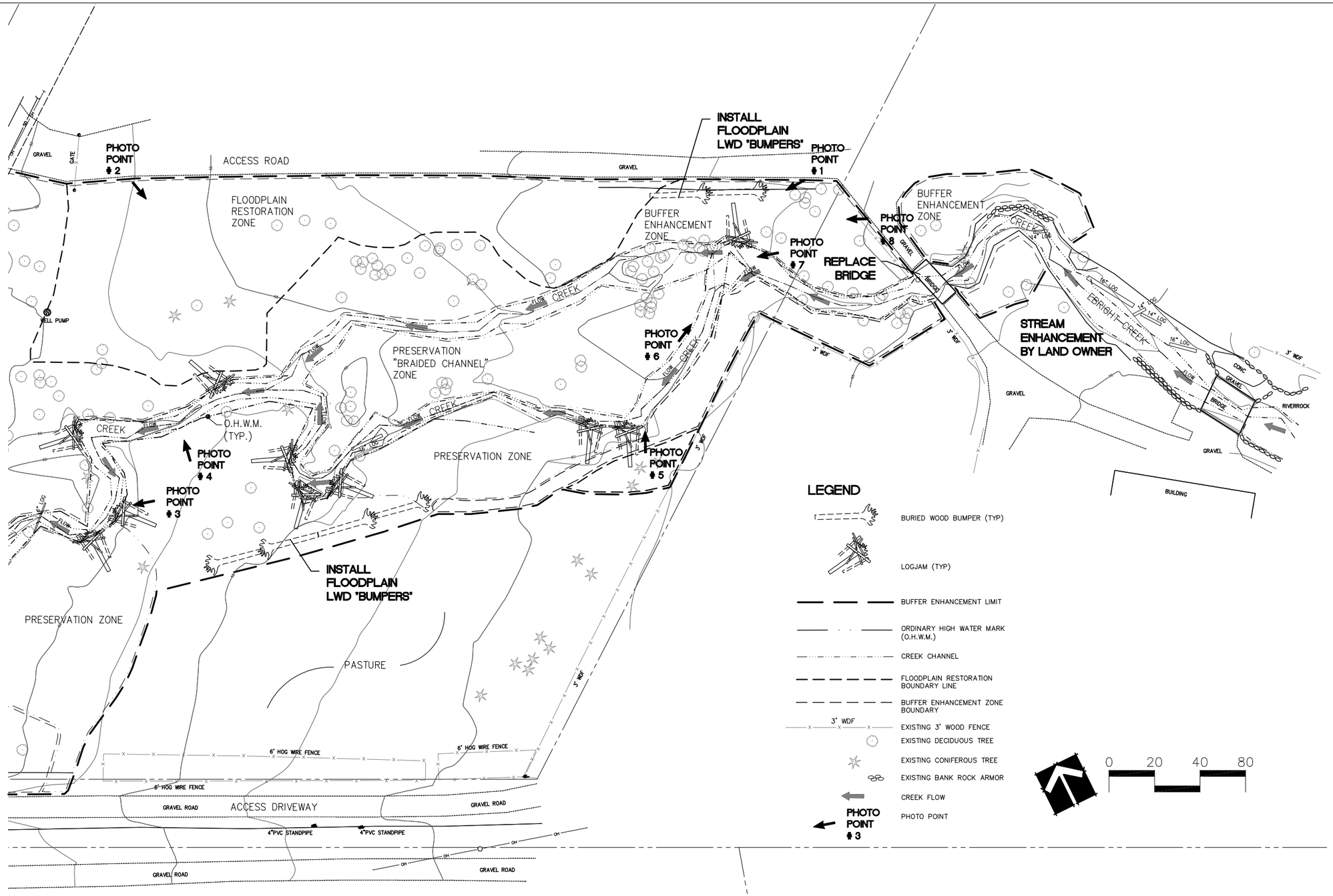

DAVID EVANS AND ASSOCIATES INC.

City of Sammamish Washington

Attachment 5B

Wood Replacement Plan

Ebright Creek Enhancement Project

City of Sammamish

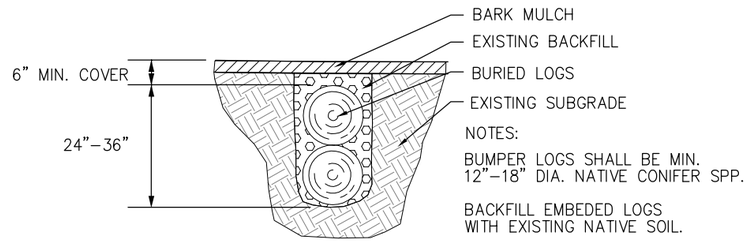

FLOOD PLAIN BUMPER

NTS

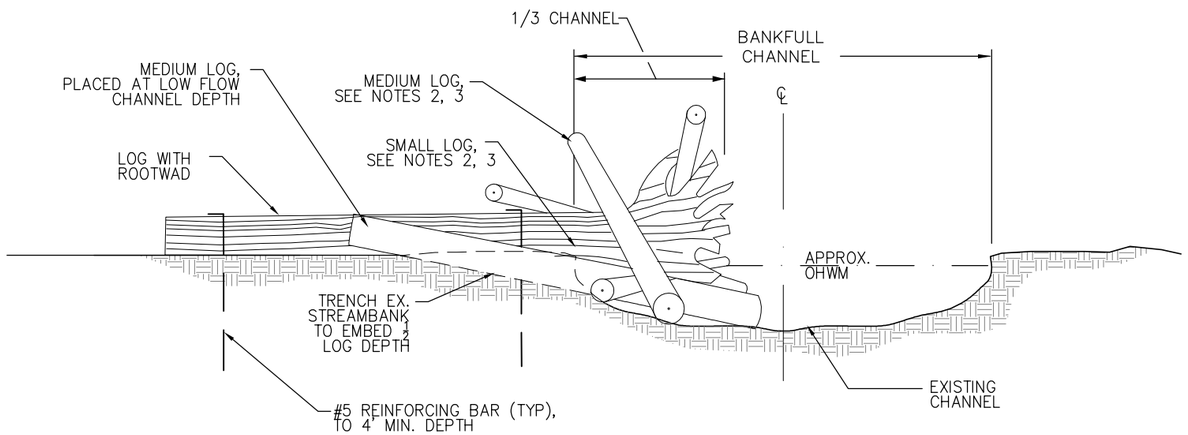

LOGJAM SECTION (TYP) 1

NTS

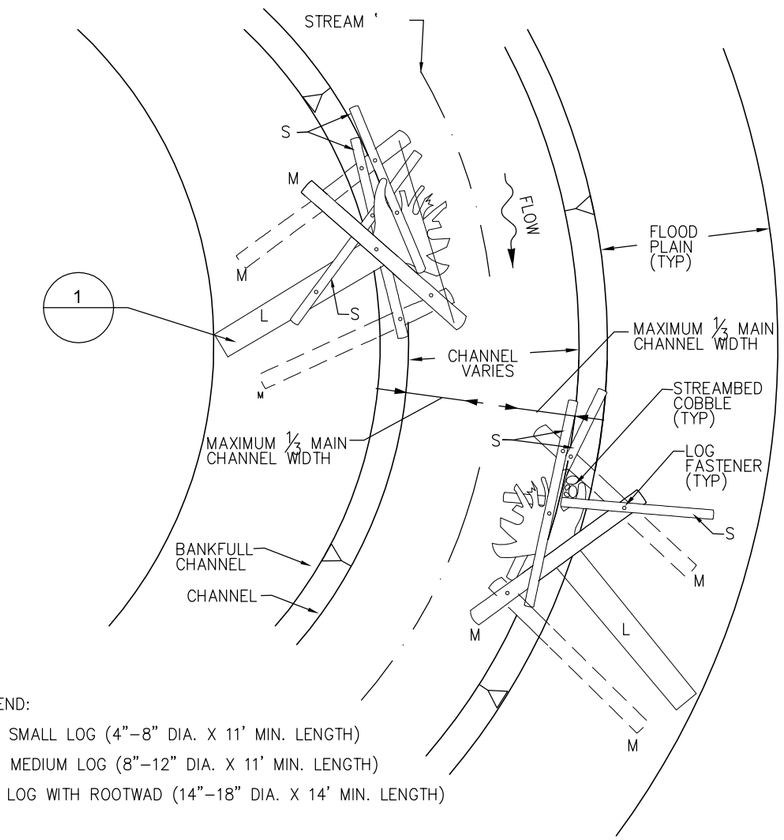

LEGEND:

S = SMALL LOG (4"–8" DIA. X 11' MIN. LENGTH)

M = MEDIUM LOG (8"–12" DIA. X 11' MIN. LENGTH)

L = LOG WITH ROOTWAD (14"–18" DIA. X 14' MIN. LENGTH)

LOGJAM - PLAN (TYP)

NOTES:

1. SEE PLANS FOR LOGJAM LOCATIONS.
2. SECURE ALL SMALL AND MEDIUM LOGS WITH LOG FASTENERS AT TWO POINTS OF CONNECTION.
3. LOGJAMS SHALL APPEAR RANDOM. PLACE SMALL AND MEDIUM LOGS AT APPROXIMATE ANGLES SHOWN IN PLANS. PLACE LOGS WITH ROOTWADS AND MEDIUM LOGS (IN–CHANNEL) AT 40–60 DEGREE ANGLE FROM CHANNEL. FINAL PLACEMENT SUBJECT TO FIELD VERIFICATION BY ENGINEER.

DAVID EVANS AND ASSOCIATES INC.

City of Sammamish Washington

Attachment 5C
Wood Replacement Plan

Ebright Creek Enhancement Project
City of Sammamish

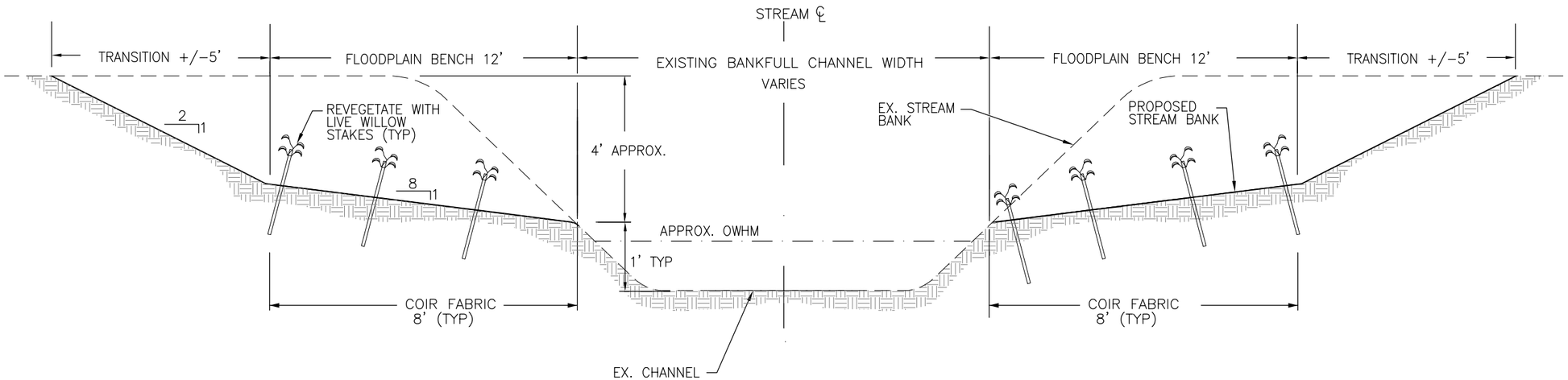

NOTES:

1. PLANT LIVE STAKES IN STAGGERED ROWS ON BOTH SIDES OF FLOODPLAIN.
2. BURY EDGE OF COIR FABRIC AND STAKE WITH WOOD STAKES AT 3' O.C.

TYPICAL SECTION

DAVID EVANS AND ASSOCIATES INC.

City of Sammamish Washington

Attachment 6
Downstream Replacement Details

Ebright Creek Enhancement Project
City of Sammamish