# City Council, Regular Meeting

## AGENDA

6:30 pm – 10:00 pm

May 2, 2017

**Call to Order**

**Roll Call**

**Pledge of Allegiance**

**Approval of Agenda**

**Estimate time**

**Presentations/Proclamations**

**Student Liaison Reports**

**Public Comment** **6:40 pm**

**Note:** *This is an opportunity for the public to address the Council. Three-minutes limit per person or five-minutes if representing the official position of a recognized community organization***.** *If you would like to show a video or PowerPoint, it must be submitted or emailed by 5 pm, the end of the business day, to the City Clerk, Melonie Anderson at manderson@sammamish.us. Please be aware that Council meetings are videotaped and available to the public.*

**Consent Calendar** **7:10 pm**

- Payroll for period ending April 15, 2017 for pay date April 20, 2017 in the amount of $ 361,379.53

1. **Approval:** Claims For Period Ending May 2, 2017 In The Amount Of $985,327.10 For Check No. 47103 Through 47208
2. **Proclamation**: Affordable Housing Week
3. **Contract**: Louis Thompson Hill Landslide Area Design Consultant/David Evans & Assoc.
4. **Contract:** Environmental Consulting Services for Park & Recreation /Watershed Co.
5. **Bid Award**: 2017 Sidewalk Repair & ADA Ramp Retrofit/RRJ Company
6. **Bid Award**: Guardrail Repair Projects/Petersen Brothers
7. **Contract Amendments:** Fire Services/Eastside Fire & Rescue

8. **Approval:** Notes for the April 3, 2017 Study Session
9. **Approval:** Minutes for the April 18, 2017 Regular Meeting

**Public Hearings** **7:15 pm**

10. **Ordinance**: Amending Chapters 21A.15, 21A.45, 21B.15, And 21B.45 Of The Sammamish Municipal Code Pertaining To Permanent And Temporary Signs

**Unfinished Business**

**New Business**

11. **Ordinance:** First Reading: Granting To Zayo Group, LLC, A Nonexclusive Franchise To Install, Construct, Maintain, Repair, And Operate A Broadband Telecommunications System Within The Public Rights-Of-Way; Providing For Severability; And Establishing An Effective Date **7:30 pm**

12. **Interlocal Agreement**: Issaquah School District Joint-Use Agreement **7:45 pm**

13. **Bid Award**: Skyline High School Turf Replacement **8:00 pm**

14. **Department Repor**t: Public Works **8:45 pm**

**Council Reports/ Council Committee Reports** **9:15 pm**

**City Manager Report** **9:45 pm**

- 2016 Impact Fee Report
- AWC Voting Members

**Executive Session –** Potential Litigation pursuant to RCW 42.30.110(1)(i)

**Adjournment** **10:00 pm**

City Council meetings are wheelchair accessible. American Sign Language (ASL) interpretation is available upon request. Please phone (425) 295-0500 at least 48 hours in advance. Assisted Listening Devices are also available upon request.

**AGENDA CALENDAR**

| Meeting Date | Packet Material Due | Time | Meeting Type | Topics |
|---|---|---|---|---|
| **May 2017** | | | | |
| **Tues 5/09** | 5/03 | 5:00 pm<br><br>7:30 pm | Joint Study Session with Parks Commission & Planning Commission<br><br>Study Session | Presentation by the University of Washington: Laminated Root Rot and Urban Forestry Planning<br>Discussion: Land Acquisition Study<br>Discussion: Parks, Recreation and Open Space (PRO) Plan Update<br>Discussion: Thrive Sammamish Project<br>Discussion: Sign Code Update |
| **Tues 5/16** | 5/10 | 6:30 pm | Regular Meeting | Presentation: Development Code Update<br>Department Report: Finance/IT<br>Ordinance: First Reading Amending the Biennial Budget (carryforward requests)<br>Ordinance: First Reading Electrical Codes<br>Ordinance: Second Reading, Sign Code Update<br>Public Hearing: Resolution King County Public Benefit Rating System (PBRS) application/Pfaffe<br>Public Hearing: Ordinance First Reading vacating a portion of 215th Avenue NE<br><br><u>Consent:</u><br>Contract: Fourth on the Plateau Fireworks<br>Contract: Fourth on the Plateau Event Lighting<br>Resolution: Youth Board Appointments<br>Resolution: Final Plat Approval of Dalton Park (aka 223rd Assemblage) for 39 Lots<br>Resolution: Final Plat Approval of Symphony Ridge for 25 Lots<br>Contract: City Hall Space Planning Consultant/TBD<br>Contract: Construction Management Services for Sammamish Landing ADA Improvements/ HDR Inc.<br>Bid Award: Sammamish Landing ADA Improvements/TBD |
| **June 2017** | | | | |
| **Mon 6/05** | 5/31 | 4:30 pm | Study Session | Department Report: Community Development<br>Discussion: R-1 Land Use Density Analysis<br>Discussion: Urban Forestry Management Plan |

| | | | | |
|---|---|---|---|---|
| **Tues 6/06** | 5/31 | 6:30 pm | Regular Meeting | Introduction and Public Hearing: 2018-2023 Transportation Improvement Plan<br><br>Resolution: Approving King County Animal Services Contract (Tentative)<br><br><u>Consent:</u><br>Proclamation: Honor Guard Day<br>Ordinance: Second Reading Amending the Biennial Budget (carryforward requests)<br>Ordinance: Second Reading Electrical Codes<br>Bid Award: Beaver Lake Way/Drive SE Neighborhood Traffic Improvement Project/TBD<br>Bid Award: SE 4th Roadway Improvement Project/TBD<br>Bid Award: Major Stormwater Drainage Facility Repairs & Solutions/TBD<br>Bid Award: Inglewood Hill Overlay Project/TBD<br>Bid Award: 2017 Citywide Pavement Overlay Contract/TBD<br>Bid Award: 212th Improvement Project (Snake Hill)/TBD<br>Bid Award: Overlay Construction Support Contract |
| **Tues 6/13** | 6/07 | 6:30 pm | Study Session | Discussion: Title 24 Comprehensive Planning Process & Procedures Update<br>Department Report: Police<br>Discussion: Land Acquisition Strategy & Policy<br>Discussion: 2018-2023 Transportation Improvement Plan |
| **Tues 6/20** | 6/14 | 6:30 pm | Regular Meeting | Presentation: Economic Development Analysis Final Report<br>Presentation: Emergency Management Update<br>Public Hearing/Ordinance: First Reading Title 24 Comprehensive Planning Process & Procedures Update<br>Resolution: Adopting 2018-2023 Transportation Improvement Plan<br><br><u>Consent:</u><br>Bid Award: SE 4th Street Improvement Project/TBD<br>Bid Award: Louis Thompson Hill Landslide Area Project/TBD<br>Resolution: Project Acceptance Intelligent Transportation System Phase I |
| **Thurs 6/29** | | 2:00 pm | Finance Retreat | Council Chambers |
| **July 2017** | | | | |
| **Mon 7/03** | 6/28 | 4:30 pm | Study Session | Meeting Cancelled |

| | | | | |
|---|---|---|---|---|
| **Weds 7/05** | 6/28 | 6:30 pm | Regular Meeting | Meeting Cancelled |
| **Mon 7/10** | 7/05 | 4:30 pm | Special Study Session | Discussion: Transportation Master Plan<br>Discussion: Stormwater Rate Study Update<br>Discussion: Stormwater 6-year Capital Plan |
| **Tues 7/11** | 7/05 | 6:30 pm | Special Meeting | Public Hearing/Ordinance: First Reading Comprehensive Plan Amendments Transportation Element<br>Presentation & Discussion: Introduction to Land Acquisition Policy<br>Ordinance: First Reading: Inglewood Historic Plat Drainage Requirements<br>Ordinance: First Reading Stormwater Maintenance Code Updates<br>Executive Session: Potential Land Acquisition<br><br><u>Consent:</u><br>Bid Award: Sahalee Way Stormwater Tightline Project (not related to Sahalee Way Project)/TBD<br>Ordinance: Second Reading Title 24 Comprehensive Planning Process & Procedure Update |
| **Tues 7/18** | 7/12 | 6:30 pm | Regular Meeting | Ordinance: Second Reading Comprehensive Plan Amendments Transportation Element<br>Resolution: Adopting a Land Acquisition Policy<br>Ordinance: Second Reading: Inglewood Historic Plat Drainage Requirements<br>Ordinance: Second Reading Stormwater Maintenance Code Updates<br><br><u>Consent:</u><br>Bid Award: 2017 Crack Seal/TBD<br>Bid Award: 2017 Intersection Improvement Project/TBD<br>Bid Award: 2017 Neighborhood Transportation Projects /TBD<br>Bid Award: 2017 Sidewalk Project/TBD<br>Contract: Urban Forestry Management Plan Consultant/TBD |
| **Aug 2017** | | | No meetings | |
| **Sept 2017** | | | | |
| **Mon 9/04**<br><br>**LABOR DAY** | 8/30 | 4:30 pm | Study Session | Cancelled |

| | | | | |
|---|---|---|---|---|
| **Tues 9/05** | 8/30 | 6:30 pm | Regular Meeting | Public Hearing/Ordinance: First Reading Stormwater Rate Update<br>Public Hearing/Ordinance: First Reading Comprehensive Plan Amendments Capital Facilities Element<br><br><u>Consent:</u><br>Bid Award: Enhanced Crosswalk on ELSP near SE 33rd Street/TBD<br>Resolution: Inglewood Hill Stormwater Quality Retrofit Project Acceptance |
| **Tues 9/12** | 9/06 | 6:30 pm | Study Session | Discussion: Parks, Recreation and Open Space (PRO) Plan Update<br>Discussion: Human Services Needs Assessment<br>Discussion: Communications Strategic Plan<br>Discussion: Zackuse Creek Culvert Replacement Project & Basin Plan Update |
| **Tues 9/19** | 9/13 | 6:30 pm | Regular Meeting | Department Report: Public Works<br>Department Report: Parks & Recreation<br>Resolution: Adopting Internet Usage & Social Media Policies<br>Ordinance: Second Reading Comprehensive Plan Amendments Capital Facilities Element<br><br><u>Consent:</u><br>Contract: Zackuse Creek Basin Plan Consultant/TBD<br>Ordinance: Second Reading Stormwater Rate Update |
| **Oct 2017** | | | | |
| **Mon 10/02** | 9/27 | 4:30 pm | Study Ses sion | Department Report: Police<br>Discussion: Police Services Analysis<br>Discussion: Parking Ordinance<br>Discussion: Inattentive Driving Ordinance |
| **Tues 10/03** | 9/27 | 6:30 pm | Regular Meeting | Department Report: Fire<br>Department Report: Administrative Services<br>Resolution: Adopting Human Services Needs Assessment<br>Discussion: Communications Strategic Plan<br><br><u>Consent:</u><br>Bid Award: City Hall Space Planning Project/TBD |
| **Tues 10/10** | 10/04 | 6:30 pm | Study Session | Discussion: Transportation Master Plan<br>Discussion: Parks, Recreation and Open Space (PRO) Plan Update<br>Discussion: Big Rock Park Site B Master Plan Update |

| | | | | |
|---|---|---|---|---|
| **Tues 10/17** | 10/11 | 6:30 pm | Regular Meeting | Department Report: Finance<br><br><u>Consent:</u><br>Contract: Intelligent Transportation System Phase II Design/TBD<br>Resolution: Beaver Lake Preserve Project Acceptance<br>Resolution: Skyline High School Turf Replacement Project Acceptance |
| **Nov 2017** | | | | |
| **Mon 11/06** | 11/07 | 4:30 pm | Study Session | Discussion: Emergency Management Update<br>Discussion: Business Continuity Plan (Information Technology)<br><br><u>Consent:</u><br>Bid Award: 2017 Asphalt Patching/TBD |
| **Tues 11/07** | 11/07 | 6:30 pm | Regular Meeting | Public Hearing/Ordinance: First Reading School Impact Fee Update<br>Public Hearing/Ordinance: First Reading Mid-Biennial Budget Update<br>Public Hearing/Ordinance: First Reading and Public Hearing: 2018 Property Tax Levy<br>Ordinance: First Reading City Parking Regulations<br>Ordinance: First Reading Inattentive Driving Regulations<br><br><u>Consent:</u> |
| **Tues 11/14** | 11/14 | 6:30 pm | Study Session | Discussion: Parks, Recreation and Open Space (PRO) Plan Update<br>Discussion: Parks 6-year Capital Plan<br>Discussion: YMCA Property<br>Discussion: Transportation Master Plan |
| **Tues 11/21** | 11/21 | 6:30 pm | Regular Meeting | Discussion: Maintenance Facility Strategic Plan<br><br><u>Consent:</u><br>Ordinance: Second Reading City Parking Regulations<br>Ordinance:Second Reading Inattentive Driving Regulation<br>Ordinance: Third Reading Consolidated Annual Amendment of Comprehensive Plan<br>Ordinance: Second Reading School Impact Fee Updates<br>Ordinance: Second Reading Mid-Biennial Budget<br>Ordinance: Second Reading Property Tax Levy Rate<br>Resolution: Fee Schedule<br>Resolution: Salary Schedule<br>Resolution: Medical Premium Co-Pay |

| Dec 2017 | | | | |
|---|---|---|---|---|
| **Mon 12/04** | 11/29 | 4:30 pm | Study Session | |
| **Tues 12/05** | 11/29 | 5:00 pm<br><br>6:30 pm | Joint Study Session with Planning Commission<br><br>Regular Meeting | Department Report: Community Development<br>Resolution: Adopting the Communications Strategic Plan<br><br><u>Consent:</u><br>Contract: Electrical Inspections/TBD<br>Contract: Electrical Inspections (2)/TBD<br>Contract: ADA Transition Plan Consultant/TBD<br>Contract: Water Quality Monitoring Strategic Plan/TBD<br>Contract: Park Landscape Maintenance/TBD<br>Contract: ROW Landscape Maintenance/TBD<br>Contract: ROW Slope Mowing/TBD<br>Contract: Street & Park Sweeping/TBD<br>Contract: Custodial Services/TBD<br>Contract: Vactoring Services/TBD<br>Contract: Tree Services/TBD<br>Contract: Fence Repair/TBD |
| **Mon 12/11** | | 6:30 pm | | Volunteer Recognition Banquet |
| **Tues 12/12** | 12/06 | 6:30 pm | Study Session | Discussion: Parks, Recreation and Open Space (PRO) Plan Update<br>Discussion: Parks 6-year Capital Plan |
| **Tues 12/19** | 12/13 | 6:30 pm | Regular Meeting | |
| **Jan 2018** | | | | |
| **Mon 1/1** | | | | New Year's Day – City Offices Closed |
| **Tues 1/2** | 12/26 | 6:30 pm | Regular Meeting | Oath of Office – New Councilmembers<br>Election: Mayor/Deputy Mayor<br><br><u>Consent</u><br>Contract: Beaver Lake Park Phase 1 Improvement Project Design Consultant/TBD |

| | | | | |
|---|---|---|---|---|
| **Tues 1/9** | 1/3 | 6:30 pm | Study Session | |
| **Tues 1/16** | 1/10 | 6:30 pm | Regular Meeting | |

| | **To Be Scheduled** | **To Be Scheduled** | **Parked Items** |
|---|---|---|---|
| | • Traffic Impact Fee Update<br>• Discussion: Concurrency Ordinance<br>• Contract: SE 24th St Sidewalk Design/TBD<br>• Lk. Sammamish Water Level<br>• Growth Centers<br>• Approval: 2017 Non-Motorized Transportation Project & Consultant Contract/TBD<br>• Approval: 2017 Intersection Improvement Project & Consultant Contract/TBD | • Approval: 2017 Neighborhood Transportation Projects & Consultant Contract/TBD<br>• Presentation & Discussion: Beaver Lake Way/Drive SE Neighborhood Traffic Improvement Project<br>• Facility 6-year Capital Plan<br>• Information Technology 6-year Capital Plan | • Discussion: Inner City Bus Service<br>• Good Samaritan Law<br>• Recycled Bags<br>• Drones in Parks<br>• Mountains to Sound Greenway<br>• Sustainability/Climate Change<br>• Review of regulations regarding the overlay areas, low impact development and special protection areas for lakes |

# May 2017

| Sun | Mon | Tue | Wed | Thu | Fri | Sat |
|---|---|---|---|---|---|---|
| 30 | 1<br>**4:30 pm** City Council Study Session | 2<br>**5:00 pm** City Council Office Hour<br>**6:30 pm** City Council Regular Meeting | 3<br>**6:30 pm** Parks and Recreation Commission Meeting | 4<br>**6:30 pm** Planning Commission Meeting - Canceled | 5 | 6<br>**1:00 pm** Au-Some Artists Movin' and Groovin'! |
| 7 | 8 | 9<br>**5:00 pm** Joint Meeting with Parks Commission and Planning Commission<br>**7:00 pm** City Council Study Session | 10<br>**1:30 pm** Human Services Task Force Meeting<br>**4:00 pm** Sammamish Farmers Market | 11<br>**8:30 am** Trail Work at Beaver Lake Preserve<br>**9:30 am** Finance Committee Meeting<br>**6:30 pm** Land Acquisition Strategy Public Meeting #2 | 12<br>**8:30 am** Trail Work at Beaver Lake Preserve | 13<br>**8:30 am** Trail Work at Beaver Lake Preserve |
| 14 | 15 | 16<br>**6:30 pm** City Council Regular Meeting | 17<br>**4:00 pm** Sammamish Farmers Market<br>**6:00 pm** Sammamish Youth Board | 18<br>**8:30 am** Trail Work at Beaver Lake Preserve<br>**6:30 pm** Planning Commission Meeting | 19<br>**8:30 am** Trail Work at Beaver Lake Preserve | 20<br>**8:30 am** Trail Work at Beaver Lake Preserve<br>**10:00 am** Rig-A-Palooza |
| 21<br>**8:30 am** Trail Work at Beaver Lake Preserve | 22<br>**6:30 pm** Arts Commission Regular Meeting | 23<br>**6:00 pm** PRO Plan Public Meeting #1 | 24<br>**4:00 pm** Sammamish Farmers Market | 25<br>**8:30 am** Trail Work at Beaver Lake Preserve | 26<br>**8:30 am** Trail Work at Beaver Lake Preserve | 27<br>**8:30 am** Trail Work at Beaver Lake Preserve |
| 28<br>**8:30 am** Trail Work at Beaver Lake Preserve | 29<br>**12:00 am** Memorial Day (Observed) - City offices closed | 30 | 31<br>**4:00 pm** Sammamish Farmers Market | 1<br>**6:30 pm** Planning Commission Meeting | 2<br>**5:00 pm** Skate Competition | 3 |

| | | | | | | |
|---|---|---|---|---|---|---|
| 4 | 5<br>**4:30 pm** City Council Study Session | 6<br>**5:00 pm** City Council Office Hour<br>**6:30 pm** City Council Regular Meeting | 7<br>**4:00 pm** Sammamish Farmers Market<br>**6:30 pm** Parks and Recreation Commission Meeting | 8 | 9 | 10 |

# June 2017

| Sun | Mon | Tue | Wed | Thu | Fri | Sat |
|---|---|---|---|---|---|---|
| 28<br>**8:30 am** Trail Work at Beaver Lake Preserve | 29<br>**12:00 am** Memorial Day (Observed) - City offices closed | 30 | 31<br>**4:00 pm** Sammamish Farmers Market | 1<br>**6:30 pm** Planning Commission Meeting | 2<br>**5:00 pm** Skate Competition | 3 |
| 4 | 5<br>**4:30 pm** City Council Study Session | 6<br>**5:00 pm** City Council Office Hour<br>**6:30 pm** City Council Regular Meeting | 7<br>**4:00 pm** Sammamish Farmers Market<br>**6:30 pm** Parks and Recreation Commission Meeting | 8 | 9 | 10 |
| 11 | 12 | 13<br>**6:30 pm** City Council Study Session | 14<br>**1:30 pm** Human Services Task Force Meeting<br>**4:00 pm** Sammamish Farmers Market<br>**6:30 pm** Land Acquisition Strategy Public Meeting #3 | 15<br>**6:30 pm** Planning Commission Meeting | 16 | 17 |
| 18 | 19 | 20<br>**6:30 pm** City Council Regular Meeting | 21<br>**4:00 pm** Sammamish Farmers Market | 22 | 23 | 24 |
| 25 | 26<br>**6:30 pm** Arts Commission Regular Meeting | 27 | 28<br>**8:30 am** Art Exhibit<br>**4:00 pm** Sammamish Farmers Market | 29<br>**5:00 pm** City Council Financial Retreat | 30 | 1 |
| 2 | 3 | 4 | 5 | 6 | 7 | 8 |

| | | | | | | |
|---|---|---|---|---|---|---|
| | **4:30 pm** City Council Study Session - Canceled | **12:00 am** Independence Day (Observed) - City offices closed<br>**6:00 pm** Fourth on the Plateau<br>**6:30 pm** City Council Regular Meeting - Canceled | **4:00 pm** Sammamish Farmers Market<br>**6:30 pm** City Council Special Meeting - Canceled<br>**6:30 pm** Parks and Recreation Commission Meeting | **6:30 pm** Planning Commission Meeting | | |

Bill # 1

# MEMORANDUM

**TO:** Melonie Anderson/City Clerk

**FROM:** Marlene/Finance Department

**DATE:** April 27, 2017

**RE:** Claims for May 5, 2017

| | |
|---|---|
| $ | 328,476.32 |
| | 19,119.80 |
| | 24,980.22 |
| | 611,214.79 |
| | 1,535.97 |

**Top 10 Over $10,000 Payments**

| | | |
|---|---|---|
| Columbia Ford | $216,139.30 | 5 New Vehicles |
| Perteet | $96,461.66 | SE 4th Improvements - March 2017 |
| Kenyon Disend | $75,428.25 | Attorney Services - March 2017 |
| Coast To Coast Turf | $48,248.27 | Refund of Retainage - EHS Turf Replacement |
| Lochner | $45,502.86 | SE Iss/Fall City Rd Project - March 2017 |
| King Country Treasurer | $36,064.22 | Real Estate/SWM Taxes - 2017 |
| Watershed Co | $31,198.55 | Environmental Review Support - March 2017 |
| Wa Employment Security | $28,864.80 | Unemployment Benefits - 1st Qtr 2017 |
| Columbia Ford | $25,740.66 | V-062 2017 Ford Escape |
| Gray & Osborne | $22,108.98 | 212th Way Improvements - March 2017 |

**TOTAL $ 985,327.10**

**Check #47103 - # 47208**

328,476.32 +
19,119.80 +
24,980.22 +
611,214.79 +
1,535.97 +
985,327.10G+

Bill # 1

# Accounts Payable

## Check Register Totals Only

User: mdunham
Printed: 4/20/2017 - 9:29 AM

| Check | Date | Vendor No | Vendor Name | Amount | Voucher |
|---|---|---|---|---|---|
| 47103 | 04/20/2017 | COLUMBIA | Columbia Ford | 216,139.30 | 47,103 |
| 47104 | 04/20/2017 | HANKINS | Chris Hankins | 55.64 | 47,104 |
| 47105 | 04/20/2017 | ICMA401 | ICMA 401 | 50,562.23 | 47,105 |
| 47106 | 04/20/2017 | ICMA457 | ICMA457 | 16,513.62 | 47,106 |
| 47107 | 04/20/2017 | IDHW | Idaho Child Support Receipting | 200.00 | 47,107 |
| 47108 | 04/20/2017 | KINGTREA | King County Treasury Div | 36,064.22 | 47,108 |
| 47109 | 04/20/2017 | NAVIA | Navia Benefits Solution | 2,071.80 | 47,109 |
| 47110 | 04/20/2017 | PSE | Puget Sound Energy | 4,979.69 | 47,110 |
| 47111 | 04/20/2017 | SAM | Sammamish Plateau Water Sewer | 1,059.25 | 47,111 |
| 47112 | 04/20/2017 | WASUPPOR | Wa State Support Registry | 830.57 | 47,112 |
| | | | Check Total: | 328,476.32 | |

Bill # 1

# Accounts Payable

## Check Register Totals Only

User: mdunham
Printed: 4/20/2017 - 9:36 AM

| Check | Date | Vendor No | Vendor Name | Amount | Voucher |
|---|---|---|---|---|---|
| 47113 | 04/20/2017 | WALAB | Wa State Dept of Labor & Indus | 19,119.80 | 47,113 |
| | | | Check Total: | 19,119.80 | |

Bill # 1

# Accounts Payable

## Check Register Totals Only

User: mdunham
Printed: 4/25/2017 - 3:01 PM

| Check | Date | Vendor No | Vendor Name | Amount | Voucher |
|---|---|---|---|---|---|
| 47114 | 04/26/2017 | US BANK | U. S. Bank Corp Payment System | 24,980.22 | 47,114 |
| | | | Check Total: | 24,980.22 | |

Bill # 1

# Accounts Payable

## Check Register Totals Only

User: mdunham
Printed: 4/26/2017 - 11:05 AM

| Check | Date | Vendor No | Vendor Name | Amount | Voucher |
|---|---|---|---|---|---|
| 47115 | 05/02/2017 | 1STAMERI | 1st American Title Insurance Co | 15,000.00 | 47,115 |
| 47116 | 05/02/2017 | ADAMSDAM | Damon Adams | 213.82 | 47,116 |
| 47117 | 05/02/2017 | AFM | American Forest Mgmt, Inc. | 1,500.00 | 47,117 |
| 47118 | 05/02/2017 | ALDWORTH | Kurt Aldworth | 234.62 | 47,118 |
| 47119 | 05/02/2017 | ALLWEST | Allwest Underground, Inc. | 3,498.53 | 47,119 |
| 47120 | 05/02/2017 | ANEW | Anew | 1,250.00 | 47,120 |
| 47121 | 05/02/2017 | APA | American Planning Assoc | 386.00 | 47,121 |
| 47122 | 05/02/2017 | ATHLETES | Athletes for Kids | 2,500.00 | 47,122 |
| 47123 | 05/02/2017 | ATWORK | At Work! | 875.00 | 47,123 |
| 47124 | 05/02/2017 | BADGLEY | Badgley Landscape LLC | 15,484.70 | 47,124 |
| 47125 | 05/02/2017 | BEST | Best Parking Lot Cleaning, Inc | 9,589.86 | 47,125 |
| 47126 | 05/02/2017 | BHC | BHC Consultants, LLC | 14,140.00 | 47,126 |
| 47127 | 05/02/2017 | BLUEBOOK | Blue Book Law Enforcement Director | 24.95 | 47,127 |
| 47128 | 05/02/2017 | BOHANAN | Martin Bohanan | 296.00 | 47,128 |
| 47129 | 05/02/2017 | BRIDGE | Bridge Disability Ministries | 1,500.00 | 47,129 |
| 47130 | 05/02/2017 | CDW | CDW Govt Inc | 16,886.06 | 47,130 |
| 47131 | 05/02/2017 | CENTURY | Century Link | 52.97 | 47,131 |
| 47132 | 05/02/2017 | COASTTUR | Coast To Coast Turf Inc | 48,248.27 | 47,132 |
| 47133 | 05/02/2017 | CODEPUB | Code Publishing Inc | 580.31 | 47,133 |
| 47134 | 05/02/2017 | COLUMBIA | Columbia Ford | 25,740.66 | 47,134 |
| 47135 | 05/02/2017 | COMATTRI | Community Attributes Inc | 13,498.76 | 47,135 |
| 47136 | 05/02/2017 | CONSERVA | Conservation Technix Inc | 7,778.41 | 47,136 |
| 47137 | 05/02/2017 | CONSOLID | Consolidated Press | 3,664.82 | 47,137 |
| 47138 | 05/02/2017 | DAILY | Daily Journal of Commerce | 340.00 | 47,138 |
| 47139 | 05/02/2017 | EASTFRIE | Eastside Friends of Seniors | 2,500.00 | 47,139 |
| 47140 | 05/02/2017 | ELECTRIC | Electric Lightwave | 1,875.48 | 47,140 |
| 47141 | 05/02/2017 | ELTEC | Eltec Systems LLC | 2,230.66 | 47,141 |
| 47142 | 05/02/2017 | ENCOMPAS | Encompass NW | 1,750.00 | 47,142 |
| 47143 | 05/02/2017 | FIREPROT | Fire Protection, Inc. | 650.43 | 47,143 |
| 47144 | 05/02/2017 | GALT | John E. Galt | 2,125.00 | 47,144 |
| 47145 | 05/02/2017 | GENERATO | Generator Services NW | 1,617.00 | 47,145 |
| 47146 | 05/02/2017 | GOODSON | David M. Goodson | 420.00 | 47,146 |
| 47147 | 05/02/2017 | GRAYOS | Gray & Osborne, Inc. | 22,108.98 | 47,147 |
| 47148 | 05/02/2017 | GUBATA | Allison Gubata | 127.86 | 47,148 |
| 47149 | 05/02/2017 | HERMANSO | Hermanson Co LLP | 374.66 | 47,149 |
| 47150 | 05/02/2017 | HEROHOUS | Hero House | 375.00 | 47,150 |
| 47151 | 05/02/2017 | HOWARD | Lyman Howard | 34.50 | 47,151 |
| 47152 | 05/02/2017 | ICMA | ICMA | 1,400.00 | 47,152 |
| 47153 | 05/02/2017 | IMAGINE | Imagine Housing - Highland Gardens | 2,500.00 | 47,153 |
| 47154 | 05/02/2017 | INTERCOM | Inter Com Language Services | 1,300.00 | 47,154 |
| 47155 | 05/02/2017 | ISSCHURC | Issaquah Community Services | 750.00 | 47,155 |
| 47156 | 05/02/2017 | ISSFOOD | Issaquah Food & Clothing Bank | 1,875.00 | 47,156 |
| 47157 | 05/02/2017 | ISSFOUND | Issaquah Schools Foundation | 2,125.00 | 47,157 |
| 47158 | 05/02/2017 | JOHNSONC | Johnson Controls, Inc. | 1,667.69 | 47,158 |
| 47159 | 05/02/2017 | JONESELB | Dylan L.B. Jones | 121.99 | 47,159 |
| 47160 | 05/02/2017 | KCRADIO | King Cty Radio Comm Svcs | 1,067.63 | 47,160 |
| 47161 | 05/02/2017 | KENYON2 | Kenyon Disend PLLC | 75,428.25 | 47,161 |
| 47162 | 05/02/2017 | KINGFI | King County Finance A/R | 7,338.85 | 47,162 |
| 47163 | 05/02/2017 | LOCHNER | Lochner, Inc. | 45,502.86 | 47,163 |
| 47164 | 05/02/2017 | LWSFOUND | Lake Wa Schools Foundation | 2,125.00 | 47,164 |

| Check | Date | Vendor No | Vendor Name | Amount | Voucher |
|---|---|---|---|---|---|
| 47165 | 05/02/2017 | MAUNE | Buell Maune | 150.00 | 47,165 |
| 47166 | 05/02/2017 | MORUP | Morup Signs Inc | 810.00 | 47,166 |
| 47167 | 05/02/2017 | MYER | Anjali Myer | 65.63 | 47,167 |
| 47168 | 05/02/2017 | NCA | Network Computing Architects Inc | 1,275.46 | 47,168 |
| 47169 | 05/02/2017 | NRPA | National Parks & Rec Assoc | 800.00 | 47,169 |
| 47170 | 05/02/2017 | NWENVTEC | NW Envirotech LLC | 3,326.61 | 47,170 |
| 47171 | 05/02/2017 | OER | Olympic Environmental Resource | 17,232.20 | 47,171 |
| 47172 | 05/02/2017 | OSBORN | Osborn Consulting, Inc | 3,460.33 | 47,172 |
| 47173 | 05/02/2017 | PACAIR | Pacific Air Control, Inc | 787.60 | 47,173 |
| 47174 | 05/02/2017 | PACSOIL | Pacific Topsoils, Inc | 797.08 | 47,174 |
| 47175 | 05/02/2017 | PERTEET | Perteet, Inc. | 96,461.66 | 47,175 |
| 47176 | 05/02/2017 | PLCC | Pine Lake Covenant Church | 200.00 | 47,176 |
| 47177 | 05/02/2017 | POA | Pacific Office Automation | 4,973.86 | 47,177 |
| 47178 | 05/02/2017 | PPSHEAT | PPS Heating & AC | 84.00 | 47,178 |
| 47179 | 05/02/2017 | PROSTAMP | Pro Stamps | 43.30 | 47,179 |
| 47180 | 05/02/2017 | Provac | PRO-VAC | 2,100.65 | 47,180 |
| 47181 | 05/02/2017 | PSCLEAN | Puget Sound Clean Air Agency | 13,641.50 | 47,181 |
| 47182 | 05/02/2017 | REGISJEA | Jeannine Regis | 82.50 | 47,182 |
| 47183 | 05/02/2017 | RICH | Rich Landscapiing, Inc. | 5,270.83 | 47,183 |
| 47184 | 05/02/2017 | ROYALHEA | Royal Heating LLC | 156.00 | 47,184 |
| 47185 | 05/02/2017 | SAM | Sammamish Plateau Water Sewer | 172.86 | 47,185 |
| 47186 | 05/02/2017 | SAMCHAMB | Sammamish Chamber of Commerce | 5,000.00 | 47,186 |
| 47187 | 05/02/2017 | SEQUOYAH | Sequoyah Electric, LLC | 2,927.47 | 47,187 |
| 47188 | 05/02/2017 | STEINLOT | Stein Lotzkar & Starr P.S. Inc | 4,200.00 | 47,188 |
| 47189 | 05/02/2017 | STEPHENS | Lissa Stephens | 500.00 | 47,189 |
| 47190 | 05/02/2017 | STVIN | St Vincent DePaul Society | 2,500.00 | 47,190 |
| 47191 | 05/02/2017 | SUNBELT | Sunbelt Rentals | 1,855.42 | 47,191 |
| 47192 | 05/02/2017 | TOPTOBOT | Top To Bottom Janitorial, Inc | 12,666.25 | 47,192 |
| 47193 | 05/02/2017 | UFS | Universal Field Services Inc | 1,832.22 | 47,193 |
| 47194 | 05/02/2017 | UPTON | Shelby Upton | 14.00 | 47,194 |
| 47195 | 05/02/2017 | USHEALTH | U S Healthworks | 48.00 | 47,195 |
| 47196 | 05/02/2017 | VERMEER | Vermeer NW Sales, Inc | 4,400.00 | 47,196 |
| 47197 | 05/02/2017 | WAEMP | State of Wa Employment Security Dep | 28,864.80 | 47,197 |
| 47198 | 05/02/2017 | WARRENLL | Lloyd Warren | 500.00 | 47,198 |
| 47199 | 05/02/2017 | WATERSH | The Watershed Company | 31,198.55 | 47,199 |
| 47200 | 05/02/2017 | WAWORK | Washington Workwear Stores Inc | 65.43 | 47,200 |
| 47201 | 05/02/2017 | WMCA | Wa Municipal Clerks Assoc | 75.00 | 47,201 |
| | | | Check Total: | 611,214.79 | |

Bill # 1

# Accounts Payable

## Check Register Totals Only

User: mdunham
Printed: 4/27/2017 - 9:44 AM

| Check | Date | Vendor No | Vendor Name | Amount | Voucher |
|---|---|---|---|---|---|
| 47202 | 05/02/2017 | FASTENAL | Fastenal Industrial Supplies | 88.64 | 47,202 |
| 47203 | 05/02/2017 | GIANINI | Chris Gianini | 88.38 | 47,203 |
| 47204 | 05/02/2017 | GRANGE | Grange Supply, Inc. | 741.02 | 47,204 |
| 47205 | 05/02/2017 | KOEHNEN | Amy Koehnen | 13.38 | 47,205 |
| 47206 | 05/02/2017 | POPA | Roseann Popa | 187.35 | 47,206 |
| 47207 | 05/02/2017 | SAM | Sammamish Plateau Water Sewer | 359.20 | 47,207 |
| 47208 | 05/02/2017 | STUMPF | Summer Stumpf | 58.00 | 47,208 |
| | | | Check Total: | 1,535.97 | |

AFFORDABLE HOUSING WEEK 2017

City of Sammamish

Sammamish, Washington

# ~ Proclamation ~

AFFORDABLE HOUSING WEEK 2017

***WHEREAS,*** all people should have access to safe, healthy, and affordable homes within communities of opportunity; and

***WHEREAS,*** studies have found that each $100 increase in median rent results in a 15% increase in homelessness in metro areas and a 39% increase in homelessness in nearby suburbs and rural areas; and

***WHEREAS,*** the most recent Point In Time Count found 245 people from the entire Eastside community sleeping outdoors without shelter in 2016; and

***WHEREAS,*** there were 405 students identified as homeless during the 2015-16 school year by the Lake Washington and Issaquah School District; and

***WHEREAS,*** the combined cost burden of housing plus transportation can be substantially reduced by locating affordable housing opportunities in proximity to transit; and

***WHEREAS,*** the All Home community identifies affordable housing as a critical component of making homelessness rare, brief, and one-time; and

***WHEREAS,*** everyone benefits from affordable housing, including the people who reside in these properties, their neighbors, businesses, employers, and the community as a whole; and

***WHEREAS,*** the Association of Washington Cities determined that enhancing efforts to increase affordable housing, decrease homelessness, and improve a strained behavioral health system was a critical priority for the 2017 Legislative Session; and

***WHEREAS,*** united in an effort to raise public awareness, communities throughout King County are participating in local Affordable Housing Week efforts to inform the public of the critical need to preserve and increase affordable housing in our communities; and

***WHEREAS,*** the City of Sammamish endorses the goals, objectives, and purposes of Affordable Housing Week, and in doing so, recommits itself to ensuring that our community thrives with opportunity, and that all people in it live with dignity in safe, healthy, and affordable homes; NOW

***THEREFORE BE IT RESOLVED*** that the City of Sammamish, does hereby proclaim the week of ***May 15-22, 2017***, as

## Affordable Housing Week

INCORPORATED AUGUST 31, 1999 · Sammamish · WASHINGTON · EMBRACING COMMUNITY TOGETHER

---------- ----------

*Mayor, Donald Gerend* *Date*

Bill # 2

# City Council Agenda Bill

**Meeting Date:** May 2, 2017 Date Submitted: 4/24/2017

**Originating Department:** Public Works

**Clearances:**

- ☐ Attorney
- ☐ Admin Services
- ☐ City Manager
- ☐ Community Development
- ☐ Finance & IT
- ☐ Parks & Recreation
- ☐ Public Safety
- ☑ Public Works

**Subject:** Louis Thompson Hill Road Slide Repair Project

**Action Required:** Authorize the City Manager to award and execute a design contract for the 212th Louis Thompson Hill Road Slide Repair Project

**Exhibits:**

1. Contract
2. Vicinity Map

**Budget:** $900,000 (preliminary estimate) from the 2017-2018 Transportation Capital Improvement Fund and Surface Water Capital Projects Fund

**Summary Statement:** This contract agreement will provide engineering design services with David Evans and Associates, Inc. to repair the slope that was impacted by a landslide on Louis Thompson Hill Road. The proposed design includes the construction of a new retaining wall system adjacent to the roadway and a retrofit of the adjacent stormdrain system and outfall. Plans and specifications will be ready for construction in early 2018.

**Background:** There was a landslide that occurred, during a significant storm event, in November of 2015. A culvert, located at the intersection with 210th Place SE, was blocked by a downed limb, causing storm flows to flood across Louis Thompson Hill Road. This stormwater runoff caused washouts over a portion of the soldier pile retaining wall. Crews provided temporary erosion control on the damaged slope above upper Zackuse Creek, but a long term solution is required to support the damaged retaining wall and prevent erosion and undermining of the roadway. Additionally, the stormdrain system requires a retrofit to relocate the outfall from the existing steep slopes and reduce the potential for erosion above Zackuse Creek.

**Financial Impact:** The cost of this design contract is $249,599, while the planning level cost estimate for the total project, including construction, is $900,000. Two funding sources will be used to pay for the project. The Surface Water Capital Improvement Fund includes $218,000 to improve the stormdrain system and outfall. The remaining budget comes from the ending fund balance of the Transportation Capital Improvement Fund.

**Recommended Motion:** Move to authorize the City Manager to execute a contract with David Evans and Associates, Inc. in the amount of $249,599 for Engineering and Professional Services in association with the Louis Thompson Hill Road Slide Repair Project, and administer a $20,000 management reserve.

Exhibit 1

**CITY OF SAMMAMISH**
**AGREEMENT FOR SERVICES**

Consultant: David Evans and Associates, Inc.

This Agreement is entered into by and between the City of Sammamish, Washington, a municipal corporation, hereinafter referred to as the "City," and David Evans and Associates, Inc., hereinafter referred to as the "Consultant."

WHEREAS, the City desires to have certain services performed for its citizens; and

WHEREAS, the City has selected the Consultant to perform such services pursuant to certain terms and conditions;

NOW, THEREFORE, in consideration of the mutual benefits and conditions set forth below, the parties hereto agree as follows:

**1.** **Scope of Services to be Performed by Consultant**. The Consultant shall perform those services described in Exhibit "A" of this agreement. In performing such services, the Consultant shall comply with all federal, state, and local laws and regulations applicable to the performance of such services. The Consultant shall perform services diligently and completely and in accordance with professional standards of conduct and performance.

**2.** **Compensation and Method of Payment**. The Consultant shall submit invoices for work performed using the form set forth in Exhibit "B".

The City shall pay Consultant:

[Check applicable method of payment]

_X_ According to the rates set forth in Exhibit "D "

_X_ A sum not to exceed $ 249,599.00

___ Other (describe): _____
_____

The Consultant shall complete and return to the City Exhibit "C," Taxpayer Identification Number, prior to or along with the first invoice submittal. The City shall pay the Consultant for services rendered within ten days after City Council approval.

**3.** **Duration of Agreement**. This Agreement shall be in full force and effect for a period commencing upon execution and ending March 31, 2018, unless sooner terminated under the provisions of the Agreement. Time is of the essence of this Agreement in each and all of its provisions in which performance is required.

**4.** **Ownership and Use of Documents**. Any records, files, documents, drawings, specifications, data or information, regardless of form or format, and all other materials produced by the Consultant in connection with the services provided to the City, shall be the property of the City whether the project for which they were created is executed or not

5. **Independent Contractor**. The Consultant and the City agree that the Consultant is an independent contractor with respect to the services provided pursuant to this Agreement. The Consultant will solely be responsible for its acts and for the acts of its agents, employees, subconsultants, or representatives during the performance of this Agreement. Nothing in this Agreement shall be considered to create the relationship of employer and employee between the parties hereto.

6. **Indemnification**. Consultant shall defend, indemnify and hold the City, its officers, officials, employees and volunteers harmless from any and all claims, injuries, damages, losses or suits including attorney fees, arising out of or resulting from the acts, errors or omissions of the Consultant in performance of this Agreement, except for injuries and damages caused by the sole negligence of the City. Should a court of competent jurisdiction determine

that this Agreement is subject to RCW 4.24.115, then, in the event of liability for damages arising out of bodily injury to persons or damages to property caused by or resulting from the concurrent negligence of the Consultant and the City, its officers, officials, employees, and volunteers, the Consultant's liability, including the duty and cost to defend, hereunder shall be only to the extent of the Consultant's negligence. It is further specifically and expressly understood that the indemnification provided herein constitutes the Consultant's waiver of immunity under Industrial Insurance, Title 51 RCW, solely for the purposes of this indemnification. This waiver has been mutually negotiated by the parties. The provisions of this section shall survive the expiration or termination of this Agreement.

Furthermore, should subcontracting be agreed to by the parties, the Consultant shall cause each and every Subcontractor to provide insurance coverage that complies with all applicable requirements of the Consultant-provided insurance as set forth herein, except the Consultant shall have sole responsibility for determining the limits of coverage required to be obtained by Subcontractors. The Consultant shall ensure that the City is an additional insured on each and every Subcontractor's Commercial General liability insurance policy using an endorsement at least as broad as the Insurance Services Office Additional Insured endorsement CG 20 38 04 13.

**7. Insurance.**

**A.** The Consultant shall procure and maintain for the duration of the Agreement, insurance against claims for injuries to persons or damage to property which may arise from or in connection with the performance of the work hereunder by the Consultant, its agents, representatives, or employees.

**B.** Should a court of competent jurisdiction determine that this Agreement is subject to RCW 4.24.115, then, in the event of liability for damages arising out of such services, or bodily injury to persons or damages to property, caused by or resulting from the concurrent negligence of the Consultant and the City, its officers, officials, employees, and volunteers, the Consultant's liability hereunder shall be only to the extent of the Consultant's negligence.

**Minimum Scope of Insurance**

Consultant shall obtain insurance of the types described below:

1. Automobile Liability insurance covering all owned, non-owned, hired and leased vehicles. Coverage shall be written on Insurance Services Office (ISO) form CA 00 01 or a substitute form providing equivalent liability coverage. If necessary, the policy shall be endorsed to provide contractual liability coverage.

2. Commercial General Liability insurance shall be written on ISO occurrence form CG 00 01 and shall cover liability arising from premises, operations, independent contractors and personal injury and advertising injury. The City shall be named as an additional insured under the Contractor's Commercial General Liability insurance policy with respect to the work performed for the City.

3. Workers' Compensation coverage as required by the Industrial Insurance laws of the State of Washington.

4. Professional Liability insurance appropriate to the Consultant's profession.

Minimum Amounts of Insurance

Consultant shall maintain the following insurance limits:

1. Automobile Liability insurance with a minimum combined single limit for bodily injury and property damage of $1,000,000 per accident.

2. Commercial General Liability insurance shall be written with limits no less than $1,000,000 each occurrence, $2,000,000 general aggregate.

3. Professional Liability insurance shall be written with limits no less than $1,000,000 per claim and $1,000,000 policy aggregate limit.

**Other Insurance Provisions**

The insurance policies are to contain, or be endorsed to contain, the following provisions for Automobile Liability, Professional Liability and Commercial General Liability insurance:

1. The Consultant's insurance shall not be cancelled by either party except after thirty (30) days prior written notice has been given to the City

**Verification of Coverage**

Consultant shall furnish the City with original certificates and a copy of the amendatory endorsements, including but not necessarily limited to the additional insured endorsement, evidencing the insurance requirements of the Consultant before commencement of the work.

**8. Record Keeping and Reporting.**

**A.** The Consultant shall maintain accounts and records, including personnel, property, financial, and programmatic records, which sufficiently and properly reflect all direct and indirect costs of any nature expended and services performed pursuant to this Agreement. The Consultant shall also maintain such other records as may be deemed necessary by the City to ensure proper accounting of all funds contributed by the City to the performance of this Agreement.

**B.** The foregoing records shall be maintained for a period of seven years after termination of this Agreement unless permission to destroy them is granted by the Office of the Archivist in accordance with RCW Chapter 40.14 and by the City.

**9. Audits and Inspections.** The records and documents with respect to all matters covered by this Agreement shall be subject at all times to inspection, review, or audit by the City during the performance of this Agreement.

**10. Termination.**

A. This City reserves the right to terminate or suspend this Agreement at any time, with or without cause, upon seven days prior written notice. In the event of termination or suspension, all finished or unfinished documents, data, studies, worksheets, models, reports or other materials prepared by the Consultant pursuant to this Agreement shall promptly be submitted to the City

B. In the event this Agreement is terminated or suspended, the Consultant shall be entitled to payment for all services performed and reimbursable expenses incurred to the date of termination.

C. This Agreement may be cancelled immediately if the Consultant's insurance coverage is canceled for any reason, or if the Consultant is unable to perform the services called for by this Agreement.

D. The Consultant reserves the right to terminate this Agreement with not less than fourteen days written notice, or in the event that outstanding invoices are not paid within sixty days.

E. This provision shall not prevent the City from seeking any legal remedies it may otherwise have for the violation or nonperformance of any provisions of this Agreement.

**11. Discrimination Prohibited.** The Consultant shall not discriminate against any employee, applicant for employment, or any person seeking the services of the Consultant under this Agreement, on the basis of race, color, religion, creed, sex, age, national origin, marital status, or presence of any sensory, mental, or physical handicap.

**12. Assignment and Subcontract.** The Consultant shall not assign or subcontract any portion of the services contemplated by this Agreement without the prior written consent of the City.

**13. Conflict of Interest.** The City insists on the highest level of professional ethics from its consultants. Consultant warrants that it has performed a due diligence conflicts check, and that there are no professional conflicts with the City. Consultant warrants that none of its officers, agents or employees is now working on a project for any entity engaged in litigation with the City. Consultant will not disclose any information obtained through the course of their work for the City to any third party, without written consent of the "City". It is the Consultant's duty and obligation to constantly update its due diligence with respect to conflicts, and not the City's obligation to inquire as to potential conflicts. This provision shall survive termination of this Agreement.

Exhibit 1

**14. Confidentiality.** All information regarding the City obtained by the Consultant in performance of this Agreement shall be considered confidential. Breach of confidentiality by the Consultant shall be grounds for immediate termination.

**15. Non-appropriation of funds.** If sufficient funds are not appropriated or allocated for payment under this Agreement for any future fiscal period, the City will so notify the Consultant and shall not be obligated to make payments for services or amounts incurred after the end of the current fiscal period. This Agreement will terminate upon the completion of all remaining services for which funds are allocated. No penalty or expense shall accrue to the City in the event that the terms of the provision are effectuated.

**16. Entire Agreement**. This Agreement contains the entire agreement between the parties, and no other agreements, oral or otherwise, regarding the subject matter of this Agreement shall be deemed to exist or bind either of the parties. Either party may request changes to the Agreement. Changes which are mutually agreed upon shall be incorporated by written amendments to this Agreement.

**17. Notices**. Notices to the City of Sammamish shall be sent to the following address:

City of Sammamish
801 228th Avenue SE
Sammamish, WA 98075
Phone number: (425) 295-0500

Notices to the Consultant shall be sent to the following address:

| | |
|---|---|
| Company Name | DAVID EVANS AND Associates, Inc. |
| Contact Name | Scott Soiseth |
| Street Address | 14432 SE EASTGATE WAY, Suite 400 |
| City, State Zip | Bellevue, WA 98007 |
| Phone Number | 425-519-6500 |
| Email | sbs@deainc.com |

**18. Applicable Law; Venue; Attorneys' Fees.** This Agreement shall be governed by and construed in accordance with the laws of the State of Washington. In the event any suit, arbitration, or other proceeding is instituted to enforce any term of this Agreement, the parties specifically understand and agree that venue shall be exclusively in King County, Washington. The prevailing party in any such action shall be entitled to its attorneys' fees and costs of suit, which shall be fixed by the judge hearing the case and such fee, shall be included in the judgment.

The Consultant will be required to obtain a City of Sammamish business license prior to performing any services and maintain the business license in good standing throughout the term of its agreement with the City. A city business license application can be found at: http://www.bls.dor.wa.gov/cities/sammamish.aspx."

**19. Severability.** Any provision or part of this Agreement held to be void or unenforceable under any law or regulation shall be deemed stricken and all remaining provisions shall continue to be valid and binding upon the City and the Consultant, who agree that the Agreement shall be reformed to replace such stricken provision or part with a valid and enforceable provision that comes as close as reasonably possible to expressing the intent of the stricken provision.

| CITY OF SAMMAMISH, WASHINGTON | CONSULTANT |
|---|---|
| By: | By: Scott B. Soiseth / Bradford L. Stein |
| Print Name: | Print Name: Scott B. Soiseth / Bradford L. Stein |
| Title: | Title: Sr. Associate / Vice President |
| Date: | Date: 4/25/17 / 4/25/17 |
| Attest/Authenticated: | Approved As To Form: |
| City Clerk | City Attorney |

Revised 6/2016

Exhibit 1

# EXHIBIT A

## CITY OF SAMMAMISH
## LOUIS THOMPSON ROAD SE SLIDE REPAIR
## and DRAINAGE IMPROVEMENTS

### Scope of Services

**Prepared by:**

**David Evans and Associates, Inc.**
**14432 SE Eastgate Way**
**Suite 400**
**Bellevue, WA 98007**

**425-519-6500**

**April 13, 2017**

# TABLE OF CONTENTS

**TASK 1.00 PROJECT DESCRIPTION, DESIGN CRITERIA, AND DELIVERABLES ..... 1**

1.01 Project Description ..... 1
1.03 Project Deliverables Furnished by the CONSULTANT ..... 1
1.04 Responsibilities and Services Provided by the CLIENT ..... 1
1.05 Project Assumptions ..... 2

**TASK 2.00 PROJECT MANAGEMENT AND QUALITY CONTROL ..... 2**

2.01 Project Management ..... 2
2.02 Develop Project Schedule ..... 2
2.03 Monthly Invoices/Progress Reports ..... 2
2.04 Progress Meetings ..... 2
2.05 Quality Control/Quality Assurance Review ..... 3
2.06 Change Management ..... 3

**TASK 4.00 ENVIRONMENTAL DOCUMENTATION ..... 5**

4.01 Section 106/Executive Order 0505 Compliance ..... 5
4.02 SEPA ..... 5
4.03 Critical Areas ..... 5
4.04 Environmental Permitting ..... 6
4.05 Local Permits ..... 7

**TASK 5.00 DESIGN ..... 7**

5.01 Project Site Visits ..... 7
5.02 Storm Drainage ..... 7
5.03 Wall Type Report ..... 7
5.04 Preliminary and Final Design (60% and 95% Completion) ..... 8
5.05 Prepare Ad Ready Documents ..... 9
5.06 Assistance During Bid Period ..... 9

**TASK 6.00 UTILITY COORDINATION ..... 10**

6.01 Utility Coordination ..... 10
6.02 Utility Conflict Resolution ..... 10

**TASK 7.00 GEOTECHNICAL SERVICES ..... 10**

**TASK 8.00 RIGHT OF WAY ..... 12**

8.01 Parcel Exhibits ..... 12
8.02 Legal Descriptions ..... 12
8.03 Survey Staking ..... 12
8.04 Real Estate Services ..... 13

**TASK 9.00 CONSTRUCTION SUPPORT SERVICES (IF REQUESTED) ..... 14**

9.01 Construction Support Services ..... 14

# TASK 1.00 PROJECT DESCRIPTION, DESIGN CRITERIA, AND DELIVERABLES

## 1.01 Project Description

The City of Sammamish (CLIENT) is requesting professional services from David Evans and Associates, Inc. (CONSULTANT) for preparation of Plans, Specifications, and Estimate (PS&E) documents for the Louis Thompson Road SE Slide Repair and Drainage Improvements project. This project includes the preliminary and final design of improvements to stabilize the slope on the south side of Louis Thompson Road SE and protect the roadway due to the slope washouts that occurred on November 18, 2015. The Project consists of designing a second retaining wall located adjacent to the existing soldier pile wall just south of 210$^{th}$ Pl SE and a new drainage pipe crossing Louis Thompson Road SE at 210th Pl SE and outfalling to the headwaters of Zackuse Creek.

The major features of the project include:

- Design of a new retaining wall, guard rail, curb, gutter, storm drainage, landscaping, and stream buffer mitigation Environmental documentation.
- Preliminary and final submittals of contract documents.

## 1.03 Project Deliverables Furnished by the CONSULTANT

The CONSULTANT shall maintain a project file for pertinent work items. The CLIENT review sets will be returned with each subsequent revision, illustrating that each review comment has been addressed as stated, or how/why it was not addressed. The CONSULTANT shall deliver the following documents and products to the CLIENT as part of this agreement:

- 3 copies each of the draft and final Cultural Resources Assessment
- 3 copies each of the draft and final SEPA checklist
- 3 copies each of the draft and final Critical Areas Study
- 3 copies each of the final design Mitigation Plans
- 3 copies each of the draft and final Drainage Technical Information Report (TIR)
- 3 copies each of draft and final Wall Type Report
- 3 copies of the 60% PS&E
- 3 copies of the 95% PS&E
- 1 electronic copy of the PS&E bid set
- 1 unbound copy of the final set of specifications
- 1 copy of the stamped and signed final plan set
- Electronic bid documents to Builders Exchange
- 3 copies each of the draft and final Geotechnical Report
- Potential subsurface conflicts spreadsheet
- Real Estate Documents.
- Closed Real Estate files.

## 1.04 Responsibilities and Services Provided by the CLIENT

The CLIENT will:

- Provide all available existing as-built plans, right-of-way (ROW) plans, horizontal and vertical monument information, GIS. maps, and other mapping information as available to the CONSULTANT.

- Provide all City standard specifications and City bid forms in Microsoft Word format.
- Review all submittals made to the CLIENT within 15 working days, or as agreed, and return them to the CONSULTANT with consolidated written comments regarding changes needed or revisions.

### 1.05 Project Assumptions

- All drawings will be prepared in AutoCAD 2015 format, utilizing the CONSULTANT's CADD standards, and drawn at one inch equals forty feet for 11" x 17" plans. Only 11"x17" plans will be developed for this Scope of Services.
- Specifications will follow WSDOT/APWA Standard Specifications 2016 and the City of Sammamish's General Special Provisions.
- The project duration for final design is assumed to be six (6) months.

## TASK 2.00 PROJECT MANAGEMENT AND QUALITY CONTROL

### 2.01 Project Management

Direction of the CONSULTANT staff and review of their work over the course of the project shall be provided. This work element includes preparing monthly progress reports, including the status of individual work elements, number of meetings attended, outstanding information required, and work items planned for the following month.

Periodic monitoring of the CONSULTANT'S design budget will occur over the course of the project. This work element is intended to help monitor costs and budgets, and to propose corrective actions. These actions may include formal requests for increases, modifications, or reductions in scope and/or budget.

Drawings and documents received and generated over the course of the project require review, coordination, and file management. The status of requested information will also be maintained.

### 2.02 Develop Project Schedule

The CONSULTANT and the CLIENT will jointly develop an overall project schedule showing all major and supportive activities. The schedule shall be prepared to reflect a 6-month design completion of the project. The schedule shall be arranged to meet key target dates. The CONSULTANT shall update the schedule monthly to reflect the current status of the project.

**Deliverables:** Project Schedule and Monthly Updates.

### 2.03 Monthly Invoices/Progress Reports

Monthly invoices will be prepared by the CONSULTANT per CLIENT requirements for work activities for the prior month. These invoices shall also include SUBCONSULTANT work and will be accompanied by monthly progress reports. Invoices will include back-up material for all expenses and will show approved budget and amount expended to date.

**Deliverables:** Monthly Invoices and Progress Reports (seven (7) total).

### 2.04 Progress Meetings

This work element provides for the preparation, attendance, follow-up, and documentation of meetings during the length of the project. These meetings will be the forums for agencies to provide input and guidance for the direction of the project. They will also be used to discuss project issues, approve submittals, and develop potential solutions.

The CONSULTANT shall prepare for, attend, and document up to four (4) meetings with CLIENT staff. Meetings will be required for coordination with the CLIENT and other affected agencies. The CONSULTANT will attend one meeting every month with the CLIENT's project manager for the duration of the project. The meetings will be held via conference call.

**Deliverables:** Meeting Minutes (4 total).

### 2.05 Quality Control/Quality Assurance Review

This work element is for the QC/QA review of CONSULTANT deliverables by a designated QC/QA staff member of the CONSULTANT team. The review will cover documents, reports, PS&Es, and other pertinent information on an on-going basis. The QC/QA program entails the periodic review of study criteria, design, and assumptions, as well as concepts and presentation of product format, and assures that the overall project objectives are being fulfilled.

### 2.06 Change Management

Project Managers from the CLIENT and the CONSULTANT are responsible for managing changes to the scope and schedule. The CLIENT is responsible for the authorization of any changes to the scope, budget, and/or schedule. Team members must ensure that work within their areas remains within the defined project scope, schedule, and budget. When issues, actions, or circumstances occur that could cause a change in scope, personnel, cost, or schedule, team members must communicate potential changes to the Project Manager as early as possible. Project Managers will determine whether the potential change issue will lead to a change in scope, cost, or schedule.

The CONSULTANT shall obtain written authorization from the CLIENT before implementing any change to this scope of work, schedule, or budget. All changes shall be documented using the Project Change Form.

## TASK 3.00 SURVEY

### 3.01 Field Review

The CONSULTANT and project team will conduct a field review at the outset of the project to identify key field conditions that may impact the design including the location and/or presence of driveways and roadways, trees, utilities (underground and overhead) and drainage issues.

### 3.02 Data Collection

The CONSULTANT will research and collect existing roadway, ROW, utility, and land survey information from the CLIENT and respective utility agencies for inclusion in the mapping.

### 3.03 Horizontal and Vertical Control Network

The CONSULTANT shall utilize CLIENT provided survey data to establish supplemental horizontal and vertical control points as needed for the purpose of performing surveying services. Horizontal and vertical control points shall be based upon at least two local control monuments which will then be referenced on the final drawings. These monuments shall serve as the basis of the horizontal coordinates and control of the site.

### 3.04 Establish Road Centerline Alignments and Rights-of-Way (Base Map)

The CONSULTANT shall utilize CLIENT provided survey data and will validate previously calculated centerlines and ROWs within the project limits to establish a ROW base map for this project. Parcel lines for adjacent properties will be shown as near as possible to their actual locations, but will be solely based upon readily available public records and maps. No additional survey work is proposed to perform

boundary surveying on any parcel, unless requested at a later date. The base map will be used to validate the location of existing improvements located by the topographic survey. The base map will show located street monuments and property corner markers found that were used to create this map.

### 3.05 Topographic Survey

The CONSULTANT shall prepare a project topographic base map utilizing CLIENT provided survey data. Supplemental surveys will be added, where needed, and CLIENT provided survey data will be validated to the extent required to certify the final survey. Survey data will be compiled into a common base map including City and franchise utility 'as-built' information, ROWs and road centerlines, property lines, and other existing features within the project limits including:

a. Pavement limits
b. Driveways
c. Fences
d. Storm drainage structures with pipe invert elevations
e. Sanitary sewer manholes with pipe invert elevations
f. Water valves, fire hydrants, and associated features with nut elevations
g. Electrical power vaults and associated surface features
h. Telephone manholes and pedestals
i. Natural gas valves, meters, and warning markers
j. Cable TV pedestals
k. Street lighting
l. Signage
m. Utility poles
n. Overhead wires, guy wires
o. Meters
p. Road channelization
q. Trees
r. Street markings
s. Ordinary high water mark of stream crossing

The limits of the project area surveyed will be defined as follows:

- The north and south limits being 150' north and south of the guard rail on the west side of the roadway.
- The easterly limits being the back of the existing ditch line along the eastern edge of the roadway together with a strip extending 100' northerly along 210th PL NE.
- The westerly limits being 25' beyond the center of the existing drainage swale or to the existing right of way limits in areas where no drainage swale exists.

The CONSULTANT will contract with an underground utility locate service to set paint marks as the surface location of the underground utilities. The CONSULTANT will use these marks as evidence to depict the underground location of these utilities.

The CONSULTANT will prepare the final topographic survey map with a one-foot contour interval within the paved surfaces of the roadway prism and a two-foot contour interval on non-paved surfaces outside the roadway prism. The mapping shall be plotted at a scale of one inch equals twenty feet (1"=20') with a one-foot contour interval.

**Deliverables:** Electronic copy of the topographic base map, right-of-way centerline, parcel lines, and data points in AutoCAD.

# TASK 4.00 ENVIRONMENTAL DOCUMENTATION

This Scope of Services includes preparation of environmental documentation and permits in compliance with local, state, and federal regulations. The Scope of Services identifies this and other key assumptions that the CONSULTANT has relied upon in determining the CONSULTANT's effort, fee, scope, and schedule for the project. The CONSULTANT and the CLIENT agree to renegotiate these terms in the event a key assumption becomes invalid. This scope assumes that the project will involve installation of a new retaining wall adjacent to the existing wall, with all work outside the ordinary high water mark of Zackuse Creek. Work would include restoration and planting of the slope adjacent to the stream. Avoiding in-water work will also avoid federal permit triggers, as well as the need to follow the Section 7 ESA process.

## 4.01 Section 106/Executive Order 0505 Compliance

Section 106 compliance typically requires an archaeological/historic analysis of the site and adjacent land, and consultation with the State Historic Preservation Officer (SHPO) and the Tribes. National and State Historic Registers will be reviewed. Assuming the project avoids in-water work, and has no federal permit trigger, the project will follow a process very similar to Section 106, but required by Governor's Executive Order 0505. The CONSULTANT will contact the cultural resources staff of the Tribes that may have an interest in the project area. A Cultural Resources Survey will be conducted to identify potential archaeological and historical resources. Sites identified during the survey will be recorded on Washington Archaeological Inventory forms. A draft Cultural Resources Assessment will be prepared consistent with Washington Department of Archaeology and Historic Preservation (DAHP) reporting standards, and will be submitted to the CLIENT for review. A revised report will be submitted to the U.S. Army Corps of Engineers (USACE) and SHPO for concurrence.

**Assumptions:**

- This scope assumes that no more than one unrecorded archaeological site or one unrecorded historic site will be identified within the project area.
- No more than four (4) shovel test probes will be excavated.

**Deliverables:**

- 0505 Form for CLIENT review
- 0505 Form for SHPO concurrence
- Draft Cultural Resources Assessment for CLIENT review.
- Final Cultural Resources Assessment for USACE and SHPO concurrence.

## 4.02 SEPA

The CONSULTANT shall prepare a SEPA Checklist in pursuit of a Determination of Non-Significance (DNS). The checklist will include a discussion of potential impacts to all 16 elements identified in the City's Environmental Checklist.

**Deliverables:**

- Draft SEPA Checklist for CLIENT review.
- Final SEPA Checklist for CLIENT approval.

**Assumptions:**

- The CONSULTANT assumes that there will be no Section 4(f)/6(f) issues on the project.

## 4.03 Critical Areas

The CONSULTANT shall prepare a Critical Areas Study consistent with City of Sammamish Municipal Code (SMC) Chapter 21A.50. The Critical Areas Study will include a delineation of any wetlands and streams in the project area, including the ordinary high water mark (OHWM) of Zackuse Creek. Any wetlands or

streams flagged in the field will be mapped in the topographic survey under Task 3.05. Field work will also include an assessment of how the project area may be used by any sensitive or special status wildlife species. The Critical Area Study will summarize the results of wetland delineation, including any streams, wetlands, or fish and wildlife habitat areas encountered in the project area. The study includes preparation of a conceptual mitigation plan, which will be included with the Critical Areas Study, as well as a final mitigation plan to be prepared as part of the final design process. Mitigation plans will be prepared according to City of Sammamish, Washington Department of Ecology (WDOE), and USACE guidelines.

**Deliverables:**

- Draft Critical Areas Study with Draft Conceptual Mitigation Plan (3 Copies).
- Final Critical Areas Study with Final Conceptual Mitigation Plan (3 Copies).
- Draft and Final Design Mitigation Plan (two rounds of review) – estimated to be three full-size (24" x 36") sheets, reviewed and stamped by a registered landscape architect (3 Copies).

**Assumptions:**

- The CONSULTANT assumes that there will not be more than one round of review of the Critical Areas Study by the CLIENT.
- Mitigation plan level of effort is based on restoration of the stream's riparian zone only, and will involve no wetland or in-stream mitigation.

## 4.04 Environmental Permitting

The CONSULTANT shall prepare applications for the following permits:

- Hydraulic Project Approval (HPA)
- Coastal Zone Management (CZM) Consistency Form

The CONSULTANT has estimated the level of effort for preparing permit applications and consulting with the agencies through the permit process. However, the level of effort may vary from this estimate due to agency requests for additional information or changes in design requiring additional coordination. The CONSULTANT reserves the opportunity to submit a supplemental request to cover additional costs associated with unforeseen circumstances.

***Hydraulic Project Approval***

The CONSULTANT shall prepare and submit an online HPA to the Washington Department of Fish and Wildlife (WDFW) for review under the HPA process. The application shall be submitted with complete site plans, as required by WAC Chapter 220-110. The CONSULTANT shall meet up to two times with WDFW biologists to review the JARPA and design plans.

***Coastal Zone Management Consistency***

The CONSULTANT will prepare a CZM form for submittal to WDOE along with the JARPA. The form will document consistency of the project with the Coastal Zone Management Act. Task includes preparation of a draft CZM form for review by the CLIENT followed by preparation of a final form for submittal to WDOE in electronic form.

**Meetings:**

- Up to two (2) meetings are estimated between the CONSULTANT and WDFW biologists.

**Deliverables:**

- Draft and Final HPA application materials (electronic only)

- Draft and Final CZM form (electronic only)

**Assumptions:**

- The project will not require a permit from the USACE.
- CONSULTANT will submit the HPA application online through the WDFW APPS portal on behalf of the CLIENT. The CLIENT shall reimburse the CONSULTANT for $150 application fee.

### 4.05 Local Permits

The CLIENT shall prepare all other local permits for the project.

## TASK 5.00 DESIGN

### 5.01 Project Site Visits

The CONSULTANT shall conduct up to two (2) site visits during the project to resolve design issues. CLIENT staff shall be present at the site visits, if requested.

### 5.02 Storm Drainage

The project will modify a pipe that is greater than 12" in diameter, therefore a drainage report is required. The CONSULTANT shall:

- Determine the new pervious and impervious areas and prepare figures for existing and proposed conditions.
- Determine the existing drainage systems and drainage basins for the project area and prepare figures.
- Conduct a Level 1 Downstream Drainage Analysis.
- Develop drainage system improvements for this project, pipe plan, profile, and outfall pad detail.
- Prepare a drainage technical information report (TIR) that summarizes the efforts of this task and includes any calculations.
- Determine basin contributing area using GIS data provided by the city. Determine basin flows using the Rational Method.
- Include a Stormwater Pollution Prevention Plan with the TIR.
- Submit the TIR for CLIENT review.
- Assume there will be one set of CLIENT comments on the TIR and one revision.

**Deliverables**:

- Draft Drainage TIR (3 copies and 1 electronic pdf).
- Final Drainage TIR (3 copies and 1 electronic pdf).

**Assumptions:**

Since the new impervious area is not anticipated to be greater than 2,000 square feet, it is assumed there will be no detention and water quality design.

### 5.03 Wall Type Report

The CONSULTANT shall:

- Determine feasible wall types in coordination with the Geotechnical Subconsultant

- Develop a report which documents wall types investigated and recommend a wall type based upon the following criteria:
    - Constructability
    - Cost
    - Long term durability and maintenance
    - Scour Resistance
- Wall types are expected to include:
    - Soldier pile wall with and without tie backs
    - Tangent pile wall with and without tie backs
    - Secant pile wall with and without tie backs
- Submit the Wall Type Report for CLIENT review.
- Assume there will be one set of comments on the Wall Type Report and one revision.

**Deliverables**: Draft Wall Type Report.
Final Wall Type Report.

**Assumptions:**

- Aesthetic treatments of the wall are not required

## 5.04 Preliminary and Final Design (60% and 95% Completion)

The CONSULTANT shall bring the design to a final ad-ready (100%) completion level with intermediate milestones at the 60% and 95% completions, and shall participate in a review coordination meeting to respond to CLIENT staff questions and comments at each of the two stages. Review comments will be responded to and incorporated as directed by the CLIENT Project Manager. The preliminary and final design will include the following elements, at a minimum, prepared by the CONSULTANT for each milestone as noted:

- Cover sheet including a vicinity map (60% and 95%).
- Roadway sections (typical and special) (60% and 95%).
- Roadway plans (60% and 95%).
- Roadway details (60% and 95%).
- Develop calculations, plans, specifications and an estimate of costs for the construction of the recommended wall type (60% and 95%).
- Drainage conveyance plan, profiles, and details (60% and 95%).
- Landscaping plans (60% and 95%).
- Landscaping details (60% and 95%).
- Temporary erosion control plans (TESC) (60% and 95%).
- Contract documents and specifications (60% and 95%).
- Cost estimate (60% and 95%).

**Deliverables**: Three (3) hard copies (11”x17”) of the 60% and 95% PS&Es and one electronic PDF.

**Assumptions:**

- Design Codes:
    - AASHTO LRFD Bridge Design Specifications, Seventh Edition with Interims through 2016.
    - WSDOT Bridge Design Manual, June 2016.
- Construction Specifications:
    - 2016 Washington State Department of Transportation (WSDOT) Standard Specifications. for Road, Bridge, and Municipal Construction.
- A cast-in-place fascia may be provided for some wall types although is not required.

- Level of effort is based upon a soldier pile wall with tie backs and cast-in-place fascia.
- The existing slope is stable from a global stability stand-point. The issues at the site are due to near surface erosion and not deep seated slip planes.
- Modifications of the existing wall are not included in this scope of work but may be added.
- The new wall is expected to be approximately parallel and be located between the existing soldier pile wall and creek.
- Fall protection fencing will be WSDOT Standard Cable Fence.
- Plan set will be a maximum of 3 sheets:
    - Wall Plan and Elevation,
    - Wall Details, and
    - Cable Fence.

## 5.05 Prepare Ad Ready Documents

The CONSULTANT shall prepare the following in accordance with the CLIENT's review comments from the 95% final design and coordination meeting and in accordance with regulatory agency permit conditions:

- Modifications and/or revisions in response to CLIENT review comments from the 95% design and coordination meeting.
- Final design of project elements.
- Special provisions and listing of CLIENT standard specifications, with fill-ins, to be incorporated in the construction contract documents.
- Preparation of a final ad-ready (100% completion) list of bid items, quantities, and a construction cost estimate for a set of signed and reproducible construction contract documents.

The CONSULTANT will assemble all plan sheets, general and special provisions, cost estimates, and associated documentation for submittal as an Ad Ready PS&E package.

**Deliverables**:

- Electronic submittal of Ad Ready PS&E to Builders Exchange.
- One (1) unbound set of contract specifications.
- One (1) set of reproducible 11"x17" signed plan sheets.
- One (1) final cost estimate and two (2) electronic - .xls and .pdf.

## 5.06 Assistance During Bid Period

The CONSULTANT shall provide assistance during the bid and award of the construction contract. The following tasks will be provided by the CONSULTANT on an as-needed basis. The CONSULTANT shall obtain written authorization from the CLIENT prior to providing any of the following services:

- If requested, the CONSULTANT shall assist the CLIENT during the bid period to answer any questions that arise concerning the PS&E documents, and will assist the CLIENT in preparing any addenda required to the level of budget provided in this agreement

**Deliverables**: Prepare response to bidder questions and bid document addenda.

# TASK 6.00 UTILITY COORDINATION

## 6.01 Utility Coordination

The CLIENT will transmit two copies of the roll plot/plans at major milestone submittals (30% and 60%) to utility providers. The need for utility relocations (if any) will be identified. Utility agencies will be asked to verify the accuracy and location of their respective facilities. Communications with the utility providers will be documented by the CLIENT and provided to the CONSULTANT. The CLIENT will request that the utilities determine if they have improvements that they would prefer to have relocated prior to, or coincident with, this project. The CLIENT will prepare meeting notes and distribute them to participants.

## 6.02 Utility Conflict Resolution

The CONSULTANT will provide identification, documentation, and resolution of potential subsurface conflicts between utilities and proposed CLIENT facilities. The CONSULTANT will also provide identification, documentation, and resolution of potential surface and above-ground conflicts between utilities and proposed CLIENT facilities.

A subsurface utility investigation will be conducted, if necessary, to better identify potential utility conflicts. A maximum of four (4) potholes is assumed. The CONSULTANT shall coordinate with the utility potholing vendor if requested. This work is to be funded from the Management Reserve if requested.

**Deliverables**: Potential subsurface conflict spreadsheet.

# TASK 7.00 GEOTECHNICAL SERVICES

The proposed scope of services will include the following tasks:

***Project Setup:***

- **Collect and Review Available Geotechnical Data:** The Geotechnical Subconsultant will review available and relevant information along the project corridor, including as-built drawings of the existing retaining wall.

***Geotechnical Explorations:***

- **Plan the Exploration Program:** The Geotechnical Subconsultant will plan and coordinate the geotechnical exploration program for the project. The exploration program will consist of drilling and sampling two soil borings, each about 100 feet deep. These borings are necessary to provide information for retaining wall design.
- **Conduct Utility Locates:** The Geotechnical Subconsultant will mark the exploration locations and will arrange for utility locates using the Utility Notification Center.
- **Prepare a Traffic Control Plan:** The Geotechnical Subconsultant will also prepare a Traffic Control Plan and submit it to the CLIENT for approval.
- **Conduct Explorations:** The Geotechnical Subconsultant will drill two exploratory boring in support of the design of the proposed retaining wall. The borings will be drilled to a depth of approximately 100 feet near the third points along the proposed wall. The boring will be drilled with a truck-mounted drill rig, in the south-bound traffic lane. The boring will be logged by an engineer or geologist from the Geotechnical Subconsultant. Standard penetration tests will be completed at 2.5- and 5-foot intervals during drilling. Soil samples obtained during drilling will be sealed in zip lock bags and taken to our Bothell, Washington laboratory for further evaluation and testing.

- **Generate Boring Logs and Assign Laboratory Testing**: The Geotechnical Subconsultant will prepare summary boring logs and perform laboratory testing to evaluate relevant physical properties of the site soils. Laboratory testing would include moisture content, grain-size distribution, and Atterberg Limits.

***Geotechnical Design Services**:*

- **Evaluate Field and Laboratory Data**: Based on the boring and the laboratory test results of selected samples, the Geotechnical Subconsultant will generate estimates of the soil strength and other properties needed to evaluate slope stability and wall design.
- **Develop Geologic Profiles:** The Geotechnical Subconsultant will develop geologic profiles along and through the wall as appropriate. Geologic profiles will be included in our geotechnical report.
- **Generate Seismic Design Parameters**: Based on the soils encountered along the alignment, the Geotechnical Subconsultant will determine the Site Class for seismic design. The design spectral acceleration parameters will then be selected in accordance with the appropriate design manual.
- **Lateral Pile Analysis**: The Geotechnical Subconsultant will develop recommendations for design of the proposed wall, to include earth pressures, vertical and lateral pile capacities, estimated deflections, tieback design, and backfilling.
- **Geotechnical Subconsultant QA/QC:** All design calculations and recommendations will be reviewed by a senior principal prior to distribution to the design team or the CLIENT.
- **Prepare Draft Geotechnical Report**: The Geotechnical Subconsultant will prepare a draft geotechnical report for the project. This report will contain the results of the explorations including description of surface and subsurface conditions; a site plan showing exploration locations and other pertinent features; Logs of the explorations; and laboratory test results. The report will provide geotechnical recommendations as appropriate.
- **Prepare a Final Geotechnical Engineering Report**: The Geotechnical Subconsultant will finalize our geotechnical report after receipt of review comments from the CONSULTANT and the CLIENT.
- **Review of Plans and Specifications:** The Geotechnical Subconsultant will review plans and specifications prepared by the CONSULTANT to verify that the geotechnical aspects of the project have been properly incorporated into the project.

**<u>Client Responsibilities</u>**

- Provide any existing geotechnical information for the area and as-built drawings of the existing walls.
- Provide street use permit for drilling of exploratory borings.

**<u>Assumptions</u>**

- A topographic survey of the project area with 2-foot contours will be provided by the CLIENT.
- The geotechnical explorations proposed herein will not be used to assess site environmental conditions. However, visual or olfactory observations regarding potential contamination will be noted. Analysis, testing, storage, and handling of potentially contaminated soil and ground water (either sampled or spoils from drilling) are beyond this scope of services. In the event contaminated soils and/or ground water appear to be present, the material will be properly contained on-site for disposal as mutually agreed upon without additional cost to Geotechnical Subconsultant.

- All non-contaminated drilling spoils and related debris will be drummed on site and transported off site for disposal by the drilling subcontractor.
- All required permits will be provided at no cost to Geotechnical Subconsultant.
- The borehole location will be surveyed by others, if required.
- Relatively disturbed subsurface soil samples will be collected from the borings using the Standard Penetration Test (SPT) at intervals of 2.5 feet in the upper 20 feet and at intervals of 5 feet below 20 feet.
- Construction period services, i.e., submittal review, monitoring the installation of piles, tiebacks, fill, etc., are not included in the present scope of work.
- Decommissioning of monitoring wells installed for this project will be accomplished by the contractor performing the slide repair.

**Deliverables**

- Geotechnical Work Plan Memorandum
- Traffic Control Plan
- Draft and Final Geotechnical Reports

# TASK 8.00 RIGHT OF WAY

## 8.01 Parcel Exhibits

The CONSULTANT shall prepare parcel exhibits for each affected individual parcel. It is estimated that parcel exhibits are required for two (2) total parcels, all of which will require both right-of-way acquisition exhibits and temporary construction easement exhibits. It is assumed that a parcel exhibit is not required for the City-owned parcels, if any.

**Deliverables:**

- Draft Parcel Exhibits.
- Final Parcel Exhibits.

## 8.02 Legal Descriptions

The CONSULTANT shall provide descriptions for the right-of-way acquisitions required by this project. The CONSULTANT will include area calculations and right-of-way dimensions with the parcel descriptions. It is estimated that legal descriptions are required for two (2) total parcels.

**Deliverables:**

- Draft Legal Descriptions.
- Final Legal Descriptions.

## 8.03 Survey Staking

The CONSULTANT shall provide staking of the proposed right-of-way for appraisal and negotiating purposes on the two (2) private parcels affected by the project.

**Deliverables:**

- Field Survey Staking.

## 8.04 Real Estate Services

The CONSULTANT shall perform real estate functions required to analyze, negotiate for, and acquire real property interests along Louis Thompson Road SE at 210th Place SE, on behalf of the City of Sammamish, for the Louis Thompson Road SE Slide Repair and Drainage Improvements.

Tasks include, but are not limited to:

- Obtain on behalf of the CITY, preliminary title commitments and 50-year title delineation.
- Title analysis – Prepare list of title exceptions to be cleared.
- Prepare Project Funding Estimate. Prepare Administrative Offer Summary (AOS) reports for one or more parcels that meet the threshold for AOS, should appraisal not be required.
- If formal appraisal is required, contract for and coordinate appraisal and appraisal review, if required. Additional budget will be negotiated once scope of appraisal task is determined.
- Attend and facilitate public meetings, stakeholder outreach, and any public presentations that may be required.
- Utility coordination and relocation – Analyze and clear utility encumbrances being affected by the project.
- Draft all real estate documents based on format approved by the CITY.
- Perform landowner contact and all negotiations to acquire real property, to standards required by the CITY and WSDOT LAG Manual.
- Open and oversee escrow, or facilitate document recording and real property transfer to CITY.
- Close out files and certify real estate, as may be required by the funding source.
- Attend up to three (3) coordination meetings.
- Assist with obtaining Possession and Use agreements, if required.
- Assist and participate in public hearings and actions necessary to acquire properties through eminent domain.
- Coordinate and update appraisals and appraisal reviews for potential litigation, if required.
- Relocation Services do not appear to be a requirement of this project and are therefore not included in this Scope of Services.
- This project includes acquisition of permanent right-of-way easements, temporary easements, construction agreements, and/or rights of entry, from two (2) parcels, owned by two (2) property owners.

**Deliverables:**

- Real Estate Documents.
- Closed Real Estate files.

**Assumptions:**

The City of Sammamish to provide preliminary title commitments to Consultant team.

# TASK 9.00 CONSTRUCTION SUPPORT SERVICES (IF REQUESTED)

## 9.01 Construction Support Services

If requested as part of this agreement, the CONSULTANT will provide construction support throughout the project to respond to RFIs, and will attend construction progress and coordination meetings as directed by CLIENT staff. Services may range from an on-call basis to complete construction documentation and administration. Construction assistance duties may include, but is not limited too, the following:

- Assist with/coordinate the Pre-Bid conference.
- Coordinate and review shop drawings and catalogue cuts with CLIENT staff.
- Review material certifications and coordinate with CLIENT staff.
- Respond to RFIs from the Contractor and CLIENT Project Manager.
- Provide construction engineering.
- Attend site visits as requested by the CLIENT.
- Provide on-site observation and quality control.
- Review Contractor's request for changes.
- Attend meetings as requested by the CLIENT and provide meeting minutes.
- Provide construction surveying and monumentation, as requested by the CLIENT.
- Provide construction administration.
- Project close-out.

**Assumptions:**

- The CONSULTANT will negotiate this task as a Supplement to the Agreement.

Exhibit 1

EXHIBIT B

*REQUEST FOR CONSULTANT PAYMENT*

To: City of Sammamish
801 228th Avenue SE
Sammamish, WA 98075
Phone: (425) 295-0500
FAX: (425) 295-0600

Invoice Number: _____ Date of Invoice: _____

Consultant: _____

Mailing Address: _____

_____

Telephone: _____

Email Address: _____

Contract Period: _____ Reporting Period: _____

Amount requested this invoice: $_____

Specific Program:_____

_____
Authorized signature

*ATTACH ITEMIZED DESCRIPTION OF SERVICES PROVIDED*

***For Department Use Only***

| | |
|---|---|
| Total contract amount | |
| Previous payments | |
| Current request | |
| Balance remaining | |
| | |

| |
|---|
| Authorization to Consultant: $ |
| |
| Account Number: |
| Date: |

Approved for Payment by: _____ Date: _____

***Finance Dept.***

*Check #*_____ *Check Date:*_____

Revised 6/2016

Exhibit 1

EXHIBIT C

*TAX IDENTIFICATION NUMBER*

In order for you to receive payment from the City of Sammamish, you must have either a Tax Identification Number or a Social Security Number. The Internal Revenue Service Code requires a Form 1099 for payments to every person or organization other than a corporation for services performed in the course of trade or business. Further, the law requires the City to withhold 20% on reportable amounts paid to unincorporated persons who have not supplied us with their correct Tax Identification Number or Social Security Number.

Please complete the following information request form and return it to the City of Sammamish prior to or along with the submittal of the first billing invoice.

Please check the appropriate category:

_____ Corporation _____ Partnership _____ Government Consultant

_____ Individual/Proprietor _____ Other (explain)

TIN No.: _____

Social Security No.: _____

Print Name: _____

Title: _____

Business Name: _____

Business Address: _____

Business Phone: _____

_____ _____

Date Authorized Signature (Required)

Exhibit 1

EXHIBIT D

# Attachment B
# CITY OF SAMMAMISH
# LOUIS THOMPSON ROAD SLIDE REPAIR
## Cost Estimate

### David Evans and Associates, Inc.

| | Classification | | Hrs. | x | Rate | = | Cost |
|---|---|---|---|---|---|---|---|
| 1 | Project Manager (PMGR) | | 157 | | $ 224.51 | $ | 35,248 |
| 2 | QA/QC Manager (MGPE) | | 32 | | $ 224.51 | $ | 7,184 |
| 3 | Sr. Professional Engineer (SPEN) | | 19 | | $ 224.51 | $ | 4,266 |
| 4 | Professional Engineer (PFEN) | | 8 | | $ 166.82 | $ | 1,335 |
| 5 | Design Engineer (DEEN) | | 244 | | $ 107.58 | $ | 26,249 |
| 6 | Sr. Bridge Engineer (SBEN) | | 36 | | $ 194.76 | $ | 7,011 |
| 7 | Bridge Engineer (BREN) | | 139 | | $ 144.25 | $ | 20,050 |
| 8 | Sr. CADD Technician (SCAD) | | 116 | | $ 135.21 | $ | 15,684 |
| 9 | Survey Manager (SVYM) | | 6 | | $ 199.56 | $ | 1,197 |
| 10 | Sr. Prof. Land Surveyor (PLSU) | | 8 | | $ 162.15 | $ | 1,297 |
| 11 | Survey Technician (SVTE) | | 54 | | $ 91.99 | $ | 4,967 |
| 12 | Party Chief (PCHF) | | 24 | | $ 115.37 | $ | 2,769 |
| 13 | Instructment Person (INST) | | 24 | | $ 84.19 | $ | 2,021 |
| 14 | Scientist (SCI) | | 20 | | $ 98.22 | $ | 1,964 |
| 15 | Sr. Scientist (SSCI) | | 89 | | $ 141.25 | $ | 12,572 |
| 16 | Sr. Environmental Planner (SEVP) | | 44 | | $ 130.96 | $ | 5,762 |
| 17 | Sr. Landscape Architect (SLAN) | | 70 | | $ 154.35 | $ | 10,805 |
| 18 | Sr. Landscape Designer (SLAD) | | 108 | | $ 120.05 | $ | 12,965 |
| 19 | Administrative Assistant (ADMA) | | 65 | | $ 84.19 | $ | 5,472 |
| 20 | Project Administrator (PADM) | | 15 | | $ 111.07 | $ | 1,666 |
| 21 | Engineering Mgr (ENGM) | | 2 | | $ 294.67 | $ | 589 |
| | | Total Hrs. | 1280 | | | | |
| | **Salary Cost** | | | | | **$** | **181,075** |

| **Direct Expenses** | **No.** | **Unit** | **Each** | | **Cost** | |
|---|---|---|---|---|---|---|
| Reproduction Costs | | | | | | |
| Reports | | | $70 | est. | $ - | |
| Plans | | sets @ | $10 | /set | $ - | |
| Potholing | 8 | @ | $700 | | $ 5,600 | |
| Mail/Deliveries/Fed Ex | 4 | | $30 | est. | $ 120 | |
| Underground Utility Locates | 6 | hours @ | $90 | | $ 540 | |
| Mileage | 400 | miles @ | $0.535 | /mile | $ 214 | |
| **Subtotal** | | | | | | **$ 6,474** |

**DEA Subtotal** **$ 187,549**

| **Subconsultants** | |
|---|---|
| HWA Geosciences | **$ 47,000** |
| CLS | **$ 12,100** |
| Cultural Resource Consultants, Inc. | **$ 2,950** |
| **Subconsultant Total** | **$ 62,050** |

**DEA & Subconsultants Subtotal** **$ 249,599**

Exhibit 1

## Attachment B
## CITY OF SAMMAMISH
## LOUIS THOMPSON ROAD SLIDE REPAIR

### Hour Estimate

| Item No. | Work Item | 1 Project Manager (PMGR) | 2 QA/QC Manager (MGPE) | 3 Sr. Professional Engineer (SPEN) | 4 Professional Engineer (PFEN) | 5 Design Engineer (DEEN) | 6 Sr. Bridge Engineer (SBEN) | 7 Bridge Engineer (BREN) | 8 Sr. CADD Technician (SCAD) | 9 Survey Manager (SVYM) | 10 Sr. Prof. Land Surveyor (PLSU) | 11 Survey Technician (SVTE) | 12 Party Chief (PCHF) | 13 Instructment Person (INST) | 14 Scientist (SCI) | 15 Sr. Scientist (SSCI) | 16 Sr. Environmental Planner (SEVP) | 17 Sr. Landscape Architect (SLAN) | 18 Sr. Landscape Designer (SLAD) | 19 Administrative Assistant (ADMA) | 20 Project Administrator (PADM) | 21 Engineering Mgr (ENGM) | DEA Total hrs | DEA Total $ | HWA Geosciences Total $ | CLS Total $ | Cultural Resources Consultants Total $ | DEA and Sub-consultants Total $ |
|---|---|---|---|---|---|---|---|---|---|---|---|---|---|---|---|---|---|---|---|---|---|---|---|---|---|---|---|---|
| | David Evans and Associates, Inc. | Total hrs | Total hrs | Total hrs | Total hrs | Total hrs | Total hrs | Total hrs | Total hrs | Total hrs | Total hrs | Total hrs | Total hrs | Total hrs | Total hrs | Total hrs | Total hrs | Total hrs | Total hrs | Total hrs | Total hrs | Total hrs | | | | | | |
| 2.00 | **Project Management and Quality Control** | | | | | | | | | | | | | | | | | | | | | | | | | | | |
| 2.01 | Project Management (2 hrs/week for 6 mo) | 48 | | | | | | | | | | | | | | | | | | 8 | | | 56 | $11,450 | | | | $11,450 |
| 2.02 | Develop Project Schedule | 6 | | | | | | | | | | | | | | | | | | | | | 6 | $1,347 | | | | $1,347 |
| 2.03 | Monthly Invoices/Progress Reports (7 Total) | 7 | | | | | | | | | | | | | | | | | | 3 | 7 | | 17 | $2,602 | | | | $2,602 |
| 2.04 | Progress Meetings (4 total Conference Calls) | 4 | | | | | | 4 | | | | | | | | 4 | | | | 2 | | | 14 | $2,208 | | | | $2,208 |
| 2.05 | Quality Control/Quality Assurance Review | | 32 | | | | | | | | | | | | | | | | | | | 2 | 34 | $7,774 | | | | $7,774 |
| 2.06 | Change Management | 4 | | | | | | | | | | | | | | | | | | 4 | | | 8 | $1,235 | | | | $1,235 |
| | **Work Item 2.00 Total** | 69 | 32 | | | | | 4 | | | | | | | | 4 | | | | 17 | 7 | 2 | **135** | $26,616 | | | | $26,616 |
| 3.00 | **Survey** | | | | | | | | | | | | | | | | | | | | | | | | | | | |
| 3.01 | Field Review | | | | | | | | | 2 | | | | | | | | | | | | | 2 | $399 | | | | $399 |
| 3.02 | Data Collection | | | | | | | | | | 1 | 4 | | | | | | | | | | | 5 | $530 | | | | $530 |
| 3.03 | Horizontal and Vertical Control Network | | | | | | | | | | 1 | 4 | 4 | 4 | | | | | | | | | 13 | $1,328 | | | | $1,328 |
| 3.04 | Establish Road Centerline Alignments and Right-of-Way (Base Map) | | | | | | | | | 1 | 1 | 4 | 4 | 4 | | | | | | | | | 14 | $1,528 | | | | $1,528 |
| 3.05 | Topographic Survey | | | | | | | | | 1 | 1 | 20 | 16 | 16 | | | | | | | | | 54 | $5,394 | | | | $5,394 |
| | **Work item 3.00 Total** | | | | | | | | | 4 | 4 | 32 | 24 | 24 | | | | | | | | | **88** | $9,180 | | | | $9,180 |
| 4.00 | **Environmental Documentation** | | | | | | | | | | | | | | | | | | | | | | | | | | | |
| 4.01 | Section 106/EO 0505 Compliance | 1 | | | | | | | | | | | | | | | 8 | | | 4 | | | 13 | $1,609 | | | $2,950 | $4,559 |
| 4.02 | SEPA | 1 | | | | | | | | | | | | | | 1 | 30 | | | 6 | | | 38 | $4,800 | | | | $4,800 |
| 4.03 | Critical Areas | | | | | | | | | | | | | | | | | | | | | | | | | | | |
| 4.03.1 | Draft and Final Critical Areas Study | 1 | | | | | | | | | | | | | 20 | 54 | | | | 8 | | | 83 | $10,490 | | | | $10,490 |
| 4.03.2 | Draft and Final Conceptual Mitigation Plans | 1 | | | | | | | | | | | | | | 8 | | 8 | 12 | | | | 29 | $4,030 | | | | $4,030 |
| 4.03.3 | Draft and Final Design Mitigation Plans ( 4 sheets) | 1 | | | | | | | | | | | | | | 4 | | 12 | 30 | | | | 47 | $6,243 | | | | $6,243 |
| 4.04 | Environmental Permitting | | | | | | | | | | | | | | | | | | | | | | | | | | | |
| 4.05.1 | HPA | 1 | | | | | | | | | | | | | | 16 | | 4 | 10 | 2 | | | 33 | $4,471 | | | | $4,471 |
| 4.05.2 | CZM | 1 | | | | | | | | | | | | | | 2 | 6 | | | 2 | | | 11 | $1,461 | | | | $1,461 |
| 4.06 | Local Permits | | | | | | | | | | | | | | | | | | | | | | | | | | | |
| | **Work Item 4.00 Total** | 7 | | | | | | | | | | | | | 20 | 85 | 44 | 24 | 52 | 22 | | | **254** | $33,104 | | | $2,950 | $36,054 |
| 5.00 | **Design** | | | | | | | | | | | | | | | | | | | | | | | | | | | |
| 5.01 | Project Site Visits (2 Total) | | | | 4 | | | | | | | | | | | | | | | | | | 4 | $667 | | | | $667 |
| 5.02 | Storm Drainage | | | | | | | | | | | | | | | | | | | | | | | | | | | |
| 5.02.1 | Draft Drainage TIR | 2 | | 13 | | 60 | | | | | | | | | | | | | | 4 | | | 79 | $10,159 | | | | $10,159 |
| 5.02.2 | Final Drainage TIR | 1 | | 6 | | 24 | | | | | | | | | | | | | | 4 | | | 35 | $4,490 | | | | $4,490 |
| | **Work Item 5.02 Subtotal** | 3 | | 19 | | 84 | | | | | | | | | | | | | | 8 | | | **114** | $14,649 | | | | $14,649 |
| 5.03 | Wall Type Report | | | | | | | | | | | | | | | | | | | | | | | | | | | |
| 5.03.1 | Draft Report | 1 | | | 2 | 4 | 4 | 20 | 3 | | | | | | | | | | | | | | 34 | $5,058 | | | | $5,058 |
| 5.03.2 | Final Report | 1 | | | | 1 | 1 | 4 | | | | | | | | | | | | | | | 7 | $1,104 | | | | $1,104 |
| | **Work Item 5.03 Subtotal** | **2** | | | **2** | **5** | **5** | **24** | **3** | | | | | | | | | | | | | | **41** | **$6,162** | | | | **$6,162** |
| 5.04 | Preliminary and Final Design (60% and 95% Completion) | | | | | | | | | | | | | | | | | | | | | | | | | | | |
| 5.04.1 | 60% Design | | | | | | | | | | | | | | | | | | | | | | | | | | | |
| 5.04.1.1 | 60% Plans | | | | | | | | | | | | | | | | | | | | | | | | | | | |
| | Cover sheet including a vicinity map | | | | | 1 | | | 1 | | | | | | | | | | | | | | 2 | $243 | | | | $243 |
| | Roadway sections (typical and special) | | | | | 2 | | | 2 | | | | | | | | | | | | | | 4 | $486 | | | | $486 |
| | Roadway plans | | | | | 8 | | | 4 | | | | | | | | | | | | | | 12 | $1,401 | | | | $1,401 |
| | Roadway details | | | | | 8 | | | 4 | | | | | | | | | | | | | | 12 | $1,401 | | | | $1,401 |
| | Retaining Wall Design | | | | | 8 | 8 | 38 | 30 | | | | | | | | | | | | | | 84 | $11,956 | | | | $11,956 |
| | Drainage conveyance plan, profiles, and details | | | | | 16 | | | 6 | | | | | | | | | | | | | | 22 | $2,532 | | | | $2,532 |
| | Landscaping & Bank Stabilization Plans | | | | | 8 | | | | | | | | | | | | 10 | 15 | | | | 33 | $4,205 | | | | $4,205 |
| | Landscaping & Bank Stabilization Details | | | | | | | | | | | | | | | | | 10 | 15 | | | | 25 | $3,344 | | | | $3,344 |

Exhibit 1

## Attachment B
## CITY OF SAMMAMISH
## LOUIS THOMPSON ROAD SLIDE REPAIR

### Hour Estimate

| Item No. | Work Item | 1 Project Manager (PMGR) | 2 QA/QC Manager (MGPE) | 3 Sr. Professional Engineer (SPEN) | 4 Professional Engineer (PFEN) | 5 Design Engineer (DEEN) | 6 Sr. Bridge Engineer (SBEN) | 7 Bridge Engineer (BREN) | 8 Sr. CADD Technician (SCAD) | 9 Survey Manager (SVYM) | 10 Sr. Prof. Land Surveyor (PLSU) | 11 Survey Technician (SVTE) | 12 Party Chief (PCHF) | 13 Instructment Person (INST) | 14 Scientist (SCI) | 15 Sr. Scientist (SSCI) | 16 Sr. Environmental Planner (SEVP) | 17 Sr. Landscape Architect (SLAN) | 18 Sr. Landscape Designer (SLAD) | 19 Administrative Assistant (ADMA) | 20 Project Administrator (PADM) | 21 Engineering Mgr (ENGM) | DEA Total hrs | DEA Total $ | HWA Geosciences Total $ | CLS Total $ | Cultural Resources Consultants Total $ | DEA and Sub-consultants Total $ |
|---|---|---|---|---|---|---|---|---|---|---|---|---|---|---|---|---|---|---|---|---|---|---|---|---|---|---|---|---|
| | David Evans and Associates, Inc. | Total hrs | Total hrs | Total hrs | Total hrs | Total hrs | Total hrs | Total hrs | Total hrs | Total hrs | Total hrs | Total hrs | Total hrs | Total hrs | Total hrs | Total hrs | Total hrs | Total hrs | Total hrs | Total hrs | Total hrs | Total hrs | | | | | | |
| | Temporary erosion control plans (TESC) | | | | | 6 | | | 2 | | | | | | | | | | | | | | 8 | $916 | | | | $916 |
| 5.04.1.2 | 60% Specifications | 20 | | | | | | | | | | | | | | | | 4 | | 6 | | | 30 | $5,613 | | | | $5,613 |
| 5.04.1.3 | 60% Estimate | 2 | | | | 8 | 1 | 3 | | | | | | | | | | 2 | 2 | 2 | | | 20 | $2,654 | | | | $2,654 |
| 5.04.2 | 95% Design | | | | | | | | | | | | | | | | | | | | | | | | | | | |
| 5.04.2.1 | 95% Plans | | | | | | | | | | | | | | | | | | | | | | | | | | | |
| | Cover sheet including a vicinity map | | | | | | | | 1 | | | | | | | | | | | | | | 1 | $135 | | | | $135 |
| | Roadway sections (typical and special) | | | | | 2 | | | 2 | | | | | | | | | | | | | | 4 | $486 | | | | $486 |
| | Roadway plans | | | | | 8 | | | 4 | | | | | | | | | | | | | | 12 | $1,401 | | | | $1,401 |
| | Roadway details | | | | | 6 | | | 2 | | | | | | | | | | | | | | 8 | $916 | | | | $916 |
| | Retaining Wall Design | | | | | 4 | 8 | 28 | 34 | | | | | | | | | | | | | | 74 | $10,624 | | | | $10,624 |
| | Drainage conveyance plan, profiles, and details | | | | | 8 | | | 4 | | | | | | | | | | | | | | 12 | $1,401 | | | | $1,401 |
| | Landscaping & Bank Stabilization Plans | | | | | 4 | | | | | | | | | | | | 6 | 10 | | | | 20 | $2,557 | | | | $2,557 |
| | Landscaping & Bank Stabilization Details | | | | | | | | | | | | | | | | | 6 | 10 | | | | 16 | $2,127 | | | | $2,127 |
| | Temporary erosion control plans (TESC) | | | | | 4 | | | 2 | | | | | | | | | | | | | | 6 | $701 | | | | $701 |
| 5.04.2.2 | 95% Specifications | 24 | | | | | 3 | 12 | | | | | | | | | | 2 | | 6 | | | 47 | $8,517 | | | | $8,517 |
| 5.04.2.3 | 95% Estimate | 2 | | | | 8 | 1 | 2 | | | | | | | | | | 2 | 2 | 2 | | | 19 | $2,510 | | | | $2,510 |
| | **Work Item 5.04 Subtotal** | **48** | | | | **109** | **21** | **83** | **98** | | | | | | | | | **42** | **54** | **16** | | | **471** | **$66,128** | | | | **$66,128** |
| 5.05 | Prepare Ad Ready Documents | | | | | | | | | | | | | | | | | | | | | | | | | | | |
| 5.05.1 | Incorporate 95% Comments | | | | | 8 | 1 | 2 | | | | | | | | | | | | | | | 11 | $1,344 | | | | $1,344 |
| 5.05.2 | Final Plans | | | | | 8 | 3 | 10 | 10 | | | | | | | | | | | | | | 31 | $4,239 | | | | $4,239 |
| 5.05.3 | Final Specifications | 8 | | | | | 1 | 3 | | | | | | | | | | 3 | | 2 | | | 17 | $3,055 | | | | $3,055 |
| 5.05.4 | Final Construction Estimate | 1 | | | | | 1 | 1 | | | | | | | | | | 1 | 2 | | | | 6 | $958 | | | | $958 |
| 5.05.5 | Upload Ad-Ready Documents to Builder Exchange website | | | | | | | | 1 | | | | | | | | | | | | 2 | | 3 | $357 | | | | $357 |
| | **Work Item 5.05 Subtotal** | **9** | | | | **16** | **6** | **16** | **11** | | | | | | | | | **4** | **2** | **2** | **2** | | **68** | **$9,954** | | | | **$9,954** |
| 5.06 | Assistance During Bid Period | | | | | | | | | | | | | | | | | | | | | | | | | | | |
| 5.06.1 | Prepare Addenda | 2 | | | | 8 | | 8 | 4 | | | | | | | | | | | | 6 | | 28 | $3,671 | | | | $3,671 |
| 5.06.2 | Respond to Bidder Questions | 2 | | | | 4 | | 4 | | | | | | | | | | | | | | | 10 | $1,456 | | | | $1,456 |
| | **Work Item 5.06 Subtotal** | **4** | | | | **12** | | **12** | **4** | | | | | | | | | | | | **6** | | **38** | **$5,127** | | | | **$5,127** |
| | **Work Item 5.00 Total** | 66 | | 19 | 6 | 226 | 32 | 135 | 116 | | | | | | | | | 46 | 56 | 26 | 8 | | **736** | $102,687 | | | | $102,687 |
| **6.00** | **Utility Coordination** | | | | | | | | | | | | | | | | | | | | | | | | | | | |
| 6.01 | Utility Coordination | 4 | | | | 8 | | | | | | | | | | | | | | | | | 12 | $1,759 | | | | $1,759 |
| 6.02 | Utility Conflict Resolution | 4 | | | | 8 | | | | | | | | | | | | | | | | | 12 | $1,759 | | | | $1,759 |
| | **Work Item 6.00 Total** | 8 | | | | 16 | | | | | | | | | | | | | | | | | **24** | $3,517 | | | | $3,517 |
| **7.00** | **Geotechnical Services** | | | | | | | | | | | | | | | | | | | | | | | | $47,000 | | | $47,000 |
| 7.01 | Draft Report | 2 | | | | | 2 | | | | | | | | | | | | | | | | 4 | $839 | | | | $839 |
| 7.02 | Final Report | 1 | | | | | 2 | | | | | | | | | | | | | | | | 3 | $614 | | | | $614 |
| | **Work Item 7.00 Total** | 3 | | | | | 4 | | | | | | | | | | | | | | | | **7** | $1,453 | $47,000 | | | $48,453 |
| **8.00** | **Right-of-Way Acquisition Services** | | | | | | | | | | | | | | | | | | | | | | | | | | | |
| 8.01 | Parcel Exhibits | 2 | | | 2 | 2 | | | | 1 | 2 | 12 | | | | | | | | | | | 21 | $2,626 | | | | $2,626 |
| 8.02 | Legal Descriptions | 2 | | | | | | | | 1 | 2 | 10 | | | | | | | | | | | 15 | $1,893 | | | | $1,893 |
| 8.03 | Survey Staking | | | | | | | | | | | | | | | | | | | | | | | | | | | |
| 8.04 | Real Estate Services | | | | | | | | | | | | | | | | | | | | | | | | | $12,100 | | $12,100 |
| | **Work Item 8.00 Total** | 4 | | | 2 | 2 | | | | 2 | 4 | 22 | | | | | | | | | | | **36** | $4,518 | | $12,100 | | $16,618 |
| **9.00** | **Construction Support Services (If requested)** | | | | | | | | | | | | | | | | | | | | | | | | | | | |
| 9.01 | Construction Support Services | **Negotiated as a Supplement to the Agreement** | | | | | | | | | | | | | | | | | | | | | | | | | | |
| | **Work Item 9.00 Total** | | | | | | | | | | | | | | | | | | | | | | | | | | | |
| | **EXPENSES** | | | | | | | | | | | | | | | | | | | | | | | $6,474 | | | | $6,474 |
| | **PROJECT WORK TOTALS ITEMS 1.0 - 8.0** | **157** | **32** | **19** | **8** | **244** | **36** | **139** | **116** | **6** | **8** | **54** | **24** | **24** | **20** | **89** | **44** | **70** | **108** | **65** | **15** | **2** | **1280** | **$187,549** | **$47,000** | **$12,100** | **$2,950** | **$249,599** |

Exhibit 1

**Attachment B**
**CITY OF SAMMAMISH**
**LOUIS THOMPSON ROAD SLIDE REPAIR**

**Hour Estimate**

| | David Evans and Associates, Inc. | 1 | 2 | 3 | 4 | 5 | 6 | 7 | 8 | 9 | 10 | 11 | 12 | 13 | 14 | 15 | 16 | 17 | 18 | 19 | 20 | 21 | | | | | | |
|---|---|---|---|---|---|---|---|---|---|---|---|---|---|---|---|---|---|---|---|---|---|---|---|---|---|---|---|---|
| Item No. | Work Item | Project Manager (PMGR) | QA/QC Manager (MGPE) | Sr. Professional Engineer (SPEN) | Professional Engineer (PFEN) | Design Engineer (DEEN) | Sr. Bridge Engineer (SBEN) | Bridge Engineer (BREN) | Sr. CADD Technician (SCAD) | Survey Manager (SVYM) | Sr. Prof. Land Surveyor (PLSU) | Survey Technician (SVTE) | Party Chief (PCHF) | Instructment Person (INST) | Scientist (SCI) | Sr. Scientist (SSCI) | Sr. Environmental Planner (SEVP) | Sr. Landscape Architect (SLAN) | Sr. Landscape Designer (SLAD) | Administrative Assistant (ADMA) | Project Administrator (PADM) | Engineering Mgr (ENGM) | DEA | DEA | HWA Geosciences | CLS | Cultural Resources Consultants | DEA and Sub-consultants Total |
| | | Total hrs | Total hrs | Total hrs | Total hrs | Total hrs | Total hrs | Total hrs | Total hrs | Total hrs | Total hrs | Total hrs | Total hrs | Total hrs | Total hrs | Total hrs | Total hrs | Total hrs | Total hrs | Total hrs | Total hrs | Total hrs | Total hrs | Total $ | Total $ | Total $ | Total $ | Total $ |
| | | | | | | | | | | | | | | | | | | | | | | | | | | | | |
| | Management Reserve Total | | | | | | | | | | | | | | | | | | | | | | | | | | | |
| | | | | | | | | | | | | | | | | | | | | | | | | | | | | |
| TOTAL CONTRACT AMOUNT | | 157 | 32 | 19 | 8 | 244 | 36 | 139 | 116 | 6 | 8 | 54 | 24 | 24 | 20 | 89 | 44 | 70 | 108 | 65 | 15 | 2 | 1280 | $187,549 | $47,000 | $12,100 | $2,950 | $249,599 |

Exhibit 2

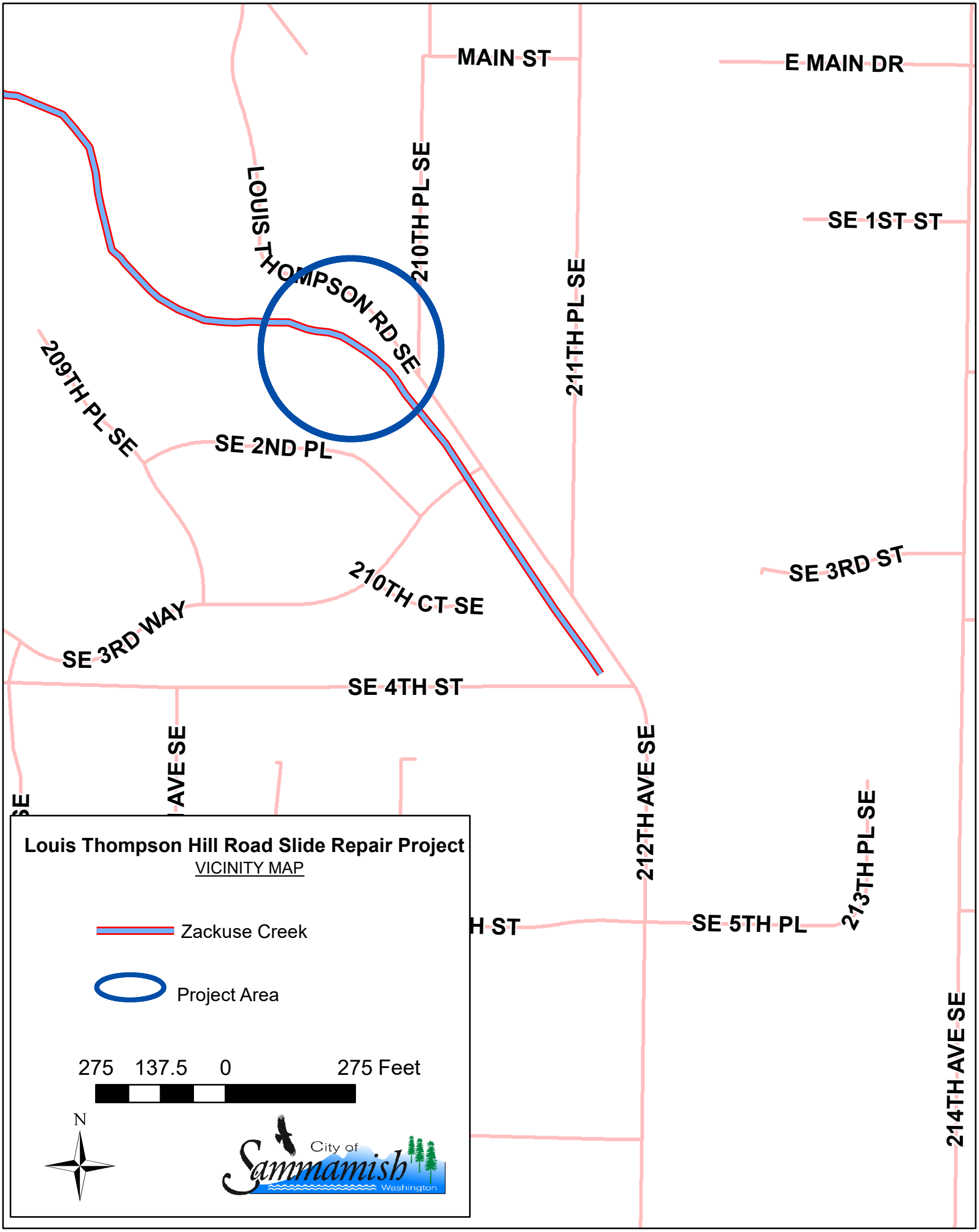
MAIN ST
E MAIN DR
SE 1ST ST
LOUIS THOMPSON RD SE
210TH PL SE
211TH PL SE
209TH PL SE
SE 2ND PL
SE 3RD ST
210TH CT SE
SE 3RD WAY
SE 4TH ST
212TH AVE SE
213TH PL SE
SE 5TH PL
214TH AVE SE
Louis Thompson Hill Road Slide Repair Project
VICINITY MAP
Zackuse Creek
Project Area
275 137.5 0 275 Feet
N
City of Sammamish Washington

Exhibit 2

# City Council Agenda Bill

**Meeting Date:** **May 2, 2017** Date Submitted: April 25, 2017

**Originating Department:** Parks and Recreation

**Clearances:**

- ☑ Attorney
- ☐ Admin Services
- ☑ City Manager
- ☐ Community Development
- ☐ Finance & IT
- ☑ Parks & Recreation
- ☐ Public Safety
- ☑ Public Works

**Subject:** Environmental Consulting Services Contract

**Action Required:** Authorize the City Manager to execute a contract with The Watershed Company for environmental consulting services in an amount not to exceed $100,000.

**Exhibits:** 1. Contract and Scope of Work

**Budget:** Funding is allocated for environmental consulting services in each capital project budget. In addition, adequate funds are available under professional services of the Parks Department Planning & Development budget and the Public Works Department Engineering budget for 2017-2018, to cover support services for non-capital projects.

**Summary Statement:**
This consulting services contract was intended to be included in the December 13, 2016 Council Agenda, but was inadvertently left off the agenda. This is a contract with The Watershed Company to provide environmental consulting services for capital improvement projects. Many of the capital improvement projects require environmental consulting services support to complete the project. These services may include critical areas impact assessment, mitigation plans, wetland reporting, shoreline enhancement design, and other related tasks. This is a two-year contract.

**Background:**
The City has successfully completed a contract for environmental services over the past few years. Prior to utilizing consulting services contracts, staff had to issue a separate contract for each project requiring environmental support, resulting in a number of “smaller” contracts throughout the year. This contract will provide timely access to consultant services as needed during project design over the course of the next two planning/design years.

Work tasks may include critical areas designation and impact analysis, critical areas mitigation planning, wetland reconnaissance, delineation and reporting, shoreline enhancement design, and monitoring. These environmental analysis requirements are a component of most capital improvement projects.

Staff reviewed the Statement of Qualifications (SOQ) for five firms from the Municipal Research and Services Center (MRSC) roster. Based on work with projects of a similar nature, the experience and qualifications of the staff, familiarity with Sammamish, and confirmation with the consultant regarding project availability, The Watershed Company was selected as the environmental services consultant.

**Financial Impact:**
The requested authorization amount is not-to-exceed $100,000.00 for a two-year contract. This amount will be covered within the existing Council approved budget amounts for the various capital improvement projects under which work is expected to be performed. There is no guarantee the full contract amount will be needed or expended. Work tasks under this agreement will be assigned to the consultant on an as needed basis.

Adequate funds are also available under the professional services of the Parks Department Planning & Development budget and the Public Works Department Engineering budget for 2017-2018, to cover non-capital projects under this contract.

**Recommended Motion:**
Authorize the City Manager to execute a contract for an amount not-to-exceed $100,000.00 with The Watershed Company for environmental consulting services.

Exhibit 1

**CITY OF SAMMAMISH**
**AGREEMENT FOR SERVICES**

Consultant: The Watershed Company

This Agreement is entered into by and between the City of Sammamish, Washington, a municipal corporation, hereinafter referred to as the "City," and The Watershed Company, hereinafter referred to as the "Consultant."

WHEREAS, the City desires to have certain services performed for its citizens; and

WHEREAS, the City has selected the Consultant to perform such services pursuant to certain terms and conditions;

NOW, THEREFORE, in consideration of the mutual benefits and conditions set forth below, the parties hereto agree as follows:

1. **Scope of Services to be Performed by Consultant.** The Consultant shall perform those services described in Exhibit "A" of this agreement. In performing such services, the Consultant shall comply with all federal, state, and local laws and regulations applicable to the performance of such services. The Consultant shall perform services diligently and completely and in accordance with professional standards of conduct and performance.

2. **Compensation and Method of Payment.** The Consultant shall submit invoices for work performed using the form set forth in Exhibit "B".

   The City shall pay Consultant:

   [Check applicable method of payment]

   _X_ According to the rates set forth in Exhibit "D"

   _X_ A sum not to exceed $100,000

   ___ Other (describe):

   The Consultant shall complete and return to the City Exhibit "C," Taxpayer Identification Number, prior to or along with the first invoice submittal. The City shall pay the Consultant for services rendered within ten days after City Council approval.

3. **Duration of Agreement.** This Agreement shall be in full force and effect for a period commencing upon execution and ending December 31, 2018, unless sooner terminated under the provisions of the Agreement. Time is of the essence of this Agreement in each and all of its provisions in which performance is required.

4. **Ownership and Use of Documents.** Any records, files, documents, drawings, specifications, data or information, regardless of form or format, and all other materials produced by the Consultant in connection with the services provided to the City, shall be the property of the City whether the project for which they were created is executed or not

5. **Independent Contractor.** The Consultant and the City agree that the Consultant is an independent contractor with respect to the services provided pursuant to this Agreement. The Consultant will solely be responsible for its acts and for the acts of its agents, employees, subconsultants, or representatives during the performance of this Agreement. Nothing in this Agreement shall be considered to create the relationship of employer and employee between the parties hereto.

6. **Indemnification.** Consultant shall defend, indemnify and hold the City, its officers, officials, employees and volunteers harmless from any and all claims, injuries, damages, losses or suits including attorney fees, arising out of or resulting from the acts, errors or omissions of the Consultant in performance of this Agreement, except for injuries and damages caused by the sole negligence of the City. Should a court of competent jurisdiction determine that this Agreement is subject to RCW 4.24.115, then, in the event of liability for damages arising out of bodily injury to persons or damages to property caused by or resulting from the concurrent negligence of the Consultant

and the City, its officers, officials, employees, and volunteers, the Consultant's liability, including the duty and cost to defend, hereunder shall be only to the extent of the Consultant's negligence. It is further specifically and expressly understood that the indemnification provided herein constitutes the Consultant's waiver of immunity under Industrial Insurance, Title 51 RCW, solely for the purposes of this indemnification. This waiver has been mutually negotiated by the parties. The provisions of this section shall survive the expiration or termination of this Agreement.

Furthermore, should subcontracting be agreed to by the parties, the Consultant shall cause each and every Subcontractor to provide insurance coverage that complies with all applicable requirements of the Consultant-provided insurance as set forth herein, except the Consultant shall have sole responsibility for determining the limits of coverage required to be obtained by Subcontractors. The Consultant shall ensure that the City is an additional insured on each and every Subcontractor's Commercial General liability insurance policy using an endorsement at least as broad as the Insurance Services Office Additional Insured endorsement CG 20 38 04 13.

**7. Insurance.**

**A.** The Consultant shall procure and maintain for the duration of the Agreement, insurance against claims for injuries to persons or damage to property which may arise from or in connection with the performance of the work hereunder by the Consultant, its agents, representatives, or employees.

**B.** Should a court of competent jurisdiction determine that this Agreement is subject to RCW 4.24.115, then, in the event of liability for damages arising out of such services, or bodily injury to persons or damages to property, caused by or resulting from the concurrent negligence of the Consultant and the City, its officers, officials, employees, and volunteers, the Consultant's liability hereunder shall be only to the extent of the Consultant's negligence.

**Minimum Scope of Insurance**

Consultant shall obtain insurance of the types described below:

1. Automobile Liability insurance covering all owned, non-owned, hired and leased vehicles. Coverage shall be written on Insurance Services Office (ISO) form CA 00 01 or a substitute form providing equivalent liability coverage. If necessary, the policy shall be endorsed to provide contractual liability coverage.

2. Commercial General Liability insurance shall be written on ISO occurrence form CG 00 01 and shall cover liability arising from premises, operations, independent contractors and personal injury and advertising injury. The City shall be named as an additional insured under the Contractor's Commercial General Liability insurance policy with respect to the work performed for the City.

3. Workers' Compensation coverage as required by the Industrial Insurance laws of the State of Washington.

4. Professional Liability insurance appropriate to the Consultant's profession.

Minimum Amounts of Insurance

Consultant shall maintain the following insurance limits:

1. Automobile Liability insurance with a minimum combined single limit for bodily injury and property damage of $1,000,000 per accident.

2. Commercial General Liability insurance shall be written with limits no less than $1,000,000 each occurrence, $2,000,000 general aggregate.

3. Professional Liability insurance shall be written with limits no less than $1,000,000 per claim and $1,000,000 policy aggregate limit.

**Other Insurance Provisions**

The insurance policies are to contain, or be endorsed to contain, the following provisions for Automobile Liability, Professional Liability and Commercial General Liability insurance:

1. The Consultant's insurance shall not be cancelled by either party except after thirty (30) days prior written notice has been given to the City

**Verification of Coverage**

Consultant shall furnish the City with original certificates and a copy of the amendatory endorsements, including but not necessarily limited to the additional insured endorsement, evidencing the insurance requirements of the Consultant before commencement of the work.

**8. Record Keeping and Reporting.**

**A.** The Consultant shall maintain accounts and records, including personnel, property, financial, and programmatic records, which sufficiently and properly reflect all direct and indirect costs of any nature expended and services performed pursuant to this Agreement. The Consultant shall also maintain such other records as may be deemed necessary by the City to ensure proper accounting of all funds contributed by the City to the performance of this Agreement.

**B.** The foregoing records shall be maintained for a period of seven years after termination of this Agreement unless permission to destroy them is granted by the Office of the Archivist in accordance with RCW Chapter 40.14 and by the City.

**9. Audits and Inspections.** The records and documents with respect to all matters covered by this Agreement shall be subject at all times to inspection, review, or audit by the City during the performance of this Agreement.

**10. Termination.**

A. This City reserves the right to terminate or suspend this Agreement at any time, with or without cause, upon seven days prior written notice. In the event of termination or suspension, all finished or unfinished documents, data, studies, worksheets, models, reports or other materials prepared by the Consultant pursuant to this Agreement shall promptly be submitted to the City

B. In the event this Agreement is terminated or suspended, the Consultant shall be entitled to payment for all services performed and reimbursable expenses incurred to the date of termination.

C. This Agreement may be cancelled immediately if the Consultant's insurance coverage is canceled for any reason, or if the Consultant is unable to perform the services called for by this Agreement.

D. The Consultant reserves the right to terminate this Agreement with not less than fourteen days written notice, or in the event that outstanding invoices are not paid within sixty days.

E. This provision shall not prevent the City from seeking any legal remedies it may otherwise have for the violation or nonperformance of any provisions of this Agreement.

**11. Discrimination Prohibited.** The Consultant shall not discriminate against any employee, applicant for employment, or any person seeking the services of the Consultant under this Agreement, on the basis of race, color, religion, creed, sex, age, national origin, marital status, or presence of any sensory, mental, or physical handicap.

**12. Assignment and Subcontract.** The Consultant shall not assign or subcontract any portion of the services contemplated by this Agreement without the prior written consent of the City.

**13. Conflict of Interest.** The City insists on the highest level of professional ethics from its consultants. Consultant warrants that it has performed a due diligence conflicts check, and that there are no professional conflicts with the City. Consultant warrants that none of its officers, agents or employees is now working on a project for any entity engaged in litigation with the City. Consultant will not disclose any information obtained through the course of their work for the City to any third party, without written consent of the "City". It is the Consultant's duty and obligation to constantly update its due diligence with respect to conflicts, and not the City's obligation to inquire as to potential conflicts. This provision shall survive termination of this Agreement.

Exhibit 1

**14. Confidentiality.** All information regarding the City obtained by the Consultant in performance of this Agreement shall be considered confidential. Breach of confidentiality by the Consultant shall be grounds for immediate termination.

**15. Non-appropriation of funds.** If sufficient funds are not appropriated or allocated for payment under this Agreement for any future fiscal period, the City will so notify the Consultant and shall not be obligated to make payments for services or amounts incurred after the end of the current fiscal period. This Agreement will terminate upon the completion of all remaining services for which funds are allocated. No penalty or expense shall accrue to the City in the event that the terms of the provision are effectuated.

**16. Entire Agreement**. This Agreement contains the entire agreement between the parties, and no other agreements, oral or otherwise, regarding the subject matter of this Agreement shall be deemed to exist or bind either of the parties. Either party may request changes to the Agreement. Changes which are mutually agreed upon shall be incorporated by written amendments to this Agreement.

**17. Notices**. Notices to the City of Sammamish shall be sent to the following address:

City of Sammamish
801 228th Avenue SE
Sammamish, WA 98075
Phone number: (425) 295-0500

Notices to the Consultant shall be sent to the following address:

| | |
|---|---|
| Company Name | The Watershed Company |
| Contact Name | Jennifer Creveling |
| Street Address | 750 Sixth Street South |
| City, State Zip | Kirkland, WA 98033 |
| Phone Number | (425) 822-5242 |
| Email | JCreveling@watershedco.com |

**18. Applicable Law; Venue; Attorneys' Fees.** This Agreement shall be governed by and construed in accordance with the laws of the State of Washington. In the event any suit, arbitration, or other proceeding is instituted to enforce any term of this Agreement, the parties specifically understand and agree that venue shall be exclusively in King County, Washington. The prevailing party in any such action shall be entitled to its attorneys' fees and costs of suit, which shall be fixed by the judge hearing the case and such fee, shall be included in the judgment.

The Consultant will be required to obtain a City of Sammamish business license prior to performing any services and maintain the business license in good standing throughout the term of its agreement with the City. A city business license application can be found at: http://www.bls.dor.wa.gov/cities/sammamish.aspx."

**19. Severability.** Any provision or part of this Agreement held to be void or unenforceable under any law or regulation shall be deemed stricken and all remaining provisions shall continue to be valid and binding upon the City and the Consultant, who agree that the Agreement shall be reformed to replace such stricken provision or part with a valid and enforceable provision that comes as close as reasonably possible to expressing the intent of the stricken provision.

| CITY OF SAMMAMISH, WASHINGTON | CONSULTANT |
|---|---|
| By:_____ | By: Jennifer Creveling |
| Print Name: _____ | Print Name: Jennifer Creveling |
| Title:_____ | Title: Principal / Sr. Biologist |
| Date:_____ | Date: 11/22/16 |
| Attest/Authenticated: | Approved As To Form: |
| _____ | _____ |
| City Clerk | City Attorney |

Revised 9/2016

Exhibit 1

# EXHIBIT A – SCOPE OF SERVICES

## Environmental Consulting Services

General Scope of Work

The work under this AGREEMENT shall consist of performing services related to Environmental Consulting Services herein defined and necessary to accomplish individual tasks (Task Orders) issued by the City of Sammamish. The CONSULTANT shall furnish all services and labor necessary to accomplish these tasks, and provide all materials, supplies, equipment, and incidentals, except as designated elsewhere in the AGREEMENT, necessary to prepare and deliver to the CITY the documents and other deliverable item(s) requested by the CITY.

The CITY is not obligated to assign any specific number of tasks to the CONSULTANT, and the CITY'S and CONSULTANT'S obligations hereunder are limited to the tasks assigned in writing. The CITY may require the CONSULTANT to perform all work on a project, or act as part of a team by performing only a portion of the project work. Task assignments may include, but are not limited to the following types of work:

- Critical Area Impact Assessment
- Critical Area Mitigation
- Wetland Reconnaissance, Delineation and Reporting
- Restoration Design
- Permitting Assistance (local, state and/or federal)
- Monitoring
- Shoreline Enhancement
- Cost Estimation
- Specification Development
- Construction Oversight
- Expert Witness
- Other related work requested by the CITY

It is anticipated that the task assignments will vary in scope, complexity and location. Specific scopes of work will be developed as individual task assignments are requested. These scopes of work will define specific deliverables and budgets expected for each task assignment.

Authorization of Work

Work requested by the CITY shall be issued in writing. The request by the CITY should include the following information, which may be furnished in coordination with the CONSULTANT:

1. Task Order title (project name)
2. Technical approach to the task (if complex enough to require this)
3. Specific deliverables
4. Schedule with milestones and deliverables
5. Cost/hour estimate
6. Due date of work

All of the above items may be brief, but will be sufficiently detailed to understand the work being authorized and the amount it will cost.

The CITY will review and approve the CONSULTANT'S submittal for any work requested, or at the CITY'S option, negotiate various elements of the work requested prior to authorizing work to begin and issuing a Notice to Proceed. If, after work has begun, the CONSULTANT cannot meet the agreed schedule or cost, the CONSULTANT shall immediately notify the CITY. Authorization of additional time or cost for approved work will be at the sole option of the CITY and will be made in writing. New budgets for any new requests or extensions of previous work will be approved in writing by the CITY prior to beginning new work.

Work may begin when the Notice to Proceed is sent to the CONSULTANT by the CITY, except that emergency actions requiring a 24-hour response can be handled by an oral authorization. Such oral authorization shall be followed up with a written confirmation within 24 hours with the information listed above included.

Exhibit 1

EXHIBIT B

*REQUEST FOR CONSULTANT PAYMENT*

To: City of Sammamish
801 228th Avenue SE
Sammamish, WA 98075
Phone: (425) 295-0500
FAX: (425) 295-0600

Invoice Number: _____ Date of Invoice: _____

Consultant: _____

Mailing Address: _____

_____

Telephone: _____

Email Address: _____

Contract Period: _____ Reporting Period: _____

Amount requested this invoice: $_____

Specific Program:_____

_____
Authorized signature

*ATTACH ITEMIZED DESCRIPTION OF SERVICES PROVIDED*

***For Department Use Only***

| | |
|---|---|
| Total contract amount | |
| Previous payments | |
| Current request | |
| Balance remaining | |
| | |

| |
|---|
| Authorization to Consultant: $ |
| |
| Account Number: |
| Date: |

Approved for Payment by: _____ Date: _____

***Finance Dept.***

*Check #*_____ *Check Date:*_____

Revised 9/2016

Exhibit 1

EXHIBIT C

*TAX IDENTIFICATION NUMBER*

In order for you to receive payment from the City of Sammamish, you must have either a Tax Identification Number or a Social Security Number. The Internal Revenue Service Code requires a Form 1099 for payments to every person or organization other than a corporation for services performed in the course of trade or business. Further, the law requires the City to withhold 20% on reportable amounts paid to unincorporated persons who have not supplied us with their correct Tax Identification Number or Social Security Number.

Please complete the following information request form and return it to the City of Sammamish prior to or along with the submittal of the first billing invoice.

Please check the appropriate category:

X Corporation _____ Partnership _____ Government Consultant

_____ Individual/Proprietor _____ Other (explain)

TIN No.: 91-1364393

Social Security No.: _____

Print Name: Jennifer Creveling

Title: Principal / Sr. Biologist

Business Name: The Watershed Co.

Business Address: 750 Sixth St. South, Kirkland, WA. 98033

Business Phone: (425) 822-5242

11/28/16
Date

Jennifer Creveling
Authorized Signature (Required)

Exhibit 1

Exhibit D

THE WATERSHED COMPANY

# Hourly Rates Effective July 2016*

| | | |
|---|---|---|
| Ed McCarthy, PE, PhD | Senior Water Resources Engineer | $170 |
| Dan Nickel, MSc | Environmental Engineer | $165 |
| Hugh Mortensen, PWS | Senior Ecologist | $165 |
| Jennifer Creveling, PWS | Senior Biologist | $165 |
| J. Kenny Booth, AICP | Senior Planner | $160 |
| Sarah Sandstrom, MSc, CFP, PWS | Senior Fisheries Biologist | $145 |
| Greg Johnston, EIT, CFP, MSc | Senior Fisheries Biologist | $140 |
| Nell Lund, PWS | Ecologist | $130 |
| Amber Mikluscak, PLA, GISP | Senior Landscape Architect/GIS Analyst | $125 |
| Mark Daniel, AICP | Associate Planner/GIS Specialist | $120 |
| J. Mike Foster | Ecologist/Arborist | $115 |
| Marina French, PLA | Landscape Architect | $115 |
| Ryan Kahlo, PWS | Ecologist | $115 |
| Betsy Mann | Marketing Manager | $110 |
| Tess Brandon, AICP | Environmental Planner | $110 |
| Clover McIngalls, PWS | Environmental Planner | $105 |
| Christi Hallman | Project Administrator | $100 |
| Debra Kroeze | Accountant | $100 |
| Adam Tycaster | Marketing Coordinator | $95 |
| Logan McClish | Water Resource Specialist | $90 |
| Amanda Jobmann | GIS Analyst/Environmental Scientist | $85 |
| Andy Noone | Assistant Planner | $85 |
| Katy Crandall | Ecologist/Arborist | $85 |
| Kyle Braun | Landscape Designer/Arborist | $85 |
| Lucas Vannice | Landscape Designer/Arborist | $85 |
| Rose Whitson | Ecologist | $85 |
| Anna Hoenig | Ecologist | $80 |
| Jasmine Palmer | Ecologist | $80 |

**Acronym Key:**

CFP = Certified Fisheries Professional as certified by the American Fisheries Society
PE = Professional Engineer
EIT = Engineer In Training
GIS = Geographic Information System
PWS = Professional Wetland Scientist as certified by the Society of Wetland Scientists
ASLA = American Society of Landscape Architects
PLA = State of Washington Professional Landscape Architect
AICP = American Institute of Certified Planners
MSc = Master of Science degree
GISP = GIS Professional

*Rates for 2016 only; escalator clause for cost of living may apply in future years

Exhibit 1

THE WATERSHED COMPANY

## Direct Costs:

| | |
|---|---|
| **Auto Mileage**<br>Maximum standard rate allowable by IRS | |
| **Reproduction:**<br><br>**Black & White Printing** — **Rate per Page**<br>8 1/2 x 11 — $0.10<br>11 x 17 — $0.20<br>12 x 18 — $0.30<br><br>**Color Printing** — **Rate per Page**<br>8 1/2 x 11 — $1.00<br>11 x 17 — $2.00<br>12 x 18 — $2.50 | **Plotting** — **Rate per SF**<br>B&W Bond — $1.05<br>Color Bond — $1.18<br>B&W Glossy — $12.18<br>Color Glossy — $13.76 |
| Outside Reproduction | At cost |
| Electrofishing Equipment Fee | $100.00/day |
| Trimble Geo XH - GPS Equipment Fee | $190.00/day |
| Panasonic FZ-G1 | $130.00/day |
| Solomat Water Quality Testing Equipment Fee | $50.00/day |
| YSI Salinity pH Meter | $50.00/day |
| Lodging and per diem | Reimbursement will be at a rate not to exceed the WA State OFM per diem rate for location services are provided. Out-of-State locations will be reimbursed at the current GSA rate for location services are provided. |
| Other Direct Costs At Cost | |

Exhibit 1

# City Council Agenda Bill

**Meeting Date:** **May 2, 2017** Date Submitted: April 26, 2017

**Originating Department:** Public Works

**Clearances:**

| | | |
|---|---|---|
| ☐ Attorney | ☐ Community Development | ☐ Parks & Recreation |
| ☐ Admin Services | ☐ Eastside Fire and Rescue | ☐ Police |
| ☑ City Manager | ☐ Finance & IT | ☑ Public Works |

**Subject:** Bid Award for the 2017 Curb Ramp Retrofit and Sidewalk Repairs - Construction

**Action Required:** Authorize the City Manager award and execute a contract with *RRJ Company, LLC*, for construction of the 2017 Curb Ramp Retrofit and Sidewalk Repairs Project in an amount of $669,265.23 and to administer a construction contingency in the amount of $66,900.

**Exhibits:** Exhibit 1. 2017 Curb Ramp Retrofit and Sidewalk Repairs Bid Summary
Exhibit 2. 2017 Curb Ramp Retrofit and Sidewalk Repairs Vicinity Map

**Budget:** 2017 Street Fund Adopted Budget Line Item 101-000-542-30-48-51: $3,500,000.00

**Summary Statement:**
The Public Works Department recommends that the City Council authorize the City Manager to award and execute a contract with the lowest responsible bidder, *RRJ Company, LLC*, for construction of the 2017 Curb Ramp Retrofit and Sidewalk Repairs Project in an amount of $669,265.23. Bids were opened on April 6th, 2017. Two bids were received.

**Background:**
This project retrofits existing curb ramps and sidewalk panels to comply with the national standard set within the Americans with Disabilities Act. Curb ramps within road rehabilitation limits that do not meet standards must be replaced or modified.

The curb ramps and sidewalk panels that are being replaced on this project are within the 2017 Pavement Management – Overlays project limits and need to be constructed prior to paving. There are 125 ramps and 1,380 square yards (SY) of sidewalk within our projected paving limits that need to be retrofitted.

The scope of the concrete work was bid separately from the 2017 Pavement Program – Overlays Project in order to ensure that construction is completed earlier in the summer, allowing for the necessary time to complete the overlay paving. By creating two separate projects we believe this to be a more

economical approach for the City as it allows for different contractors, that specialize in their respected fields, to bid on our projects individually (concrete and asphalt).

**Financial Impact:**
This work is funded through the 2017 Roadway Fund (101) and it is within the adopted budget.

| | |
|---|---|
| **Account No.: 101-000-542-30-48-51** | $3,500,000.00 |
| 2017 Curb Ramp Retrofit and Sidewalk Repairs | ($669,265.23) |
| 2017 Curb Ramp Retrofit and Sidewalk Repairs Contingency (~10%) | ($66,900) |
| **Balance Remaining** | $2,763,834.77 |

**Recommended Motion:**
Move to authorize the City Manager to award and execute a contract with *RRJ Company, LLC* for the construction of the 2017 Curb Ramp Retrofit and Sidewalk Repairs in the amount of $669,265.23 and to administer a construction contingency in the amount of $66,900.

Exhibit 1

## Bid Opening

## City of Sammamish Public Works Department

Project: **2017 Curb Ramp Retrofit and Sidewalk Repair**

Bid Date & Time: **Apr. 6th, 2017, 1:30 pm**

| | Bidder | Signed Proposal | Schedule of Prices | Bid Security Form | Acknowlegement of Receipt of Addenda | Bidder Information and Signature | Non-Collusion and Debarment Affidavit | Minimum Wage Affidavit Form | [1]List of Subcontractors | [2]Statement of Bidder's Qualifications | [2]Responsible Bidder Criteria | Total Bid Price |
|---|---|---|---|---|---|---|---|---|---|---|---|---|
| 1 | RRJ Company, LLC | X | X | X | X | X | X | X | X | X | X | $669,265.23 |
| 2 | Global Contractors, LLC | X | X | X | X | X | X | X | X | X | X | $679,100.00 |
| 3 | | | | | | | | | | | | |
| 4 | | | | | | | | | | | | |
| 5 | | | | | | | | | | | | |
| 6 | | | | | | | | | | | | |
| 7 | | | | | | | | | | | | |
| 8 | | | | | | | | | | | | |
| 9 | | | | | | | | | | | | |
| 10 | | | | | | | | | | | | |

Engineer's Estimate: $712,950

[1]Form must be submitted within one hour after published bid submittal time.

[2]Form must be submitted within 48 hours after the published bid submittal time.

budget:

Exhibit 1

Exhibit 2

# 2017 Curb Ramp Retrofit and Sidewalk Repair Vicinity Map

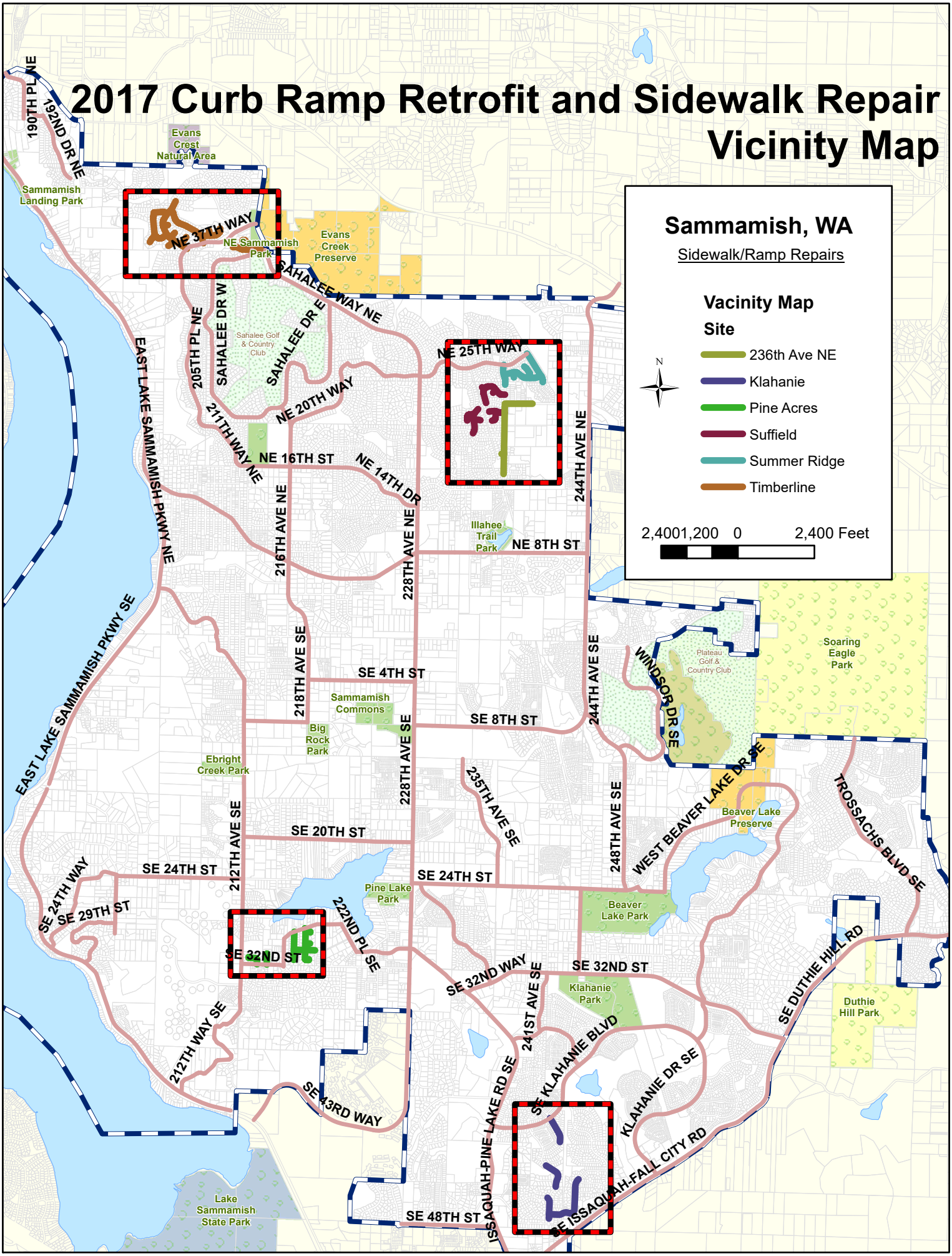


BR: generalMxd_PdriveMeltdown.mxd 3-8-2017

Exhibit 2

# City Council Agenda Bill

**Meeting Date:** **May 2, 2017** Date Submitted: April 26, 2017

**Originating Department:** Public Works

**Clearances:**

| | | |
|---|---|---|
| ☐ Attorney | ☐ Community Development | ☐ Parks & Recreation |
| ☐ Admin Services | ☐ Eastside Fire and Rescue | ☐ Police |
| ☑ City Manager | ☐ Finance & IT | ☑ Public Works |

**Subject:** Bid Award: 2017 Guardrail Project

**Action Required:** Authorize the City Manager to award a construction contraction for the 2017 Guardrail Project.

**Exhibits:** Exhibit 1. 2017 Guardrail Project Vicinity Map and individual location sheets
Exhibit 2. 2017 Guardrail Project Bid Summary

**Budget:** 2017 Street Fund Adopted Budget Line Item 101-000-542-64-48-51: $100,000.

**Summary Statement:**
This is a construction project for the installation of new guardrail at three locations in the City. Project bids were opened on April 6, 2017 and two bids were received. The lowest responsible bidder was Petersen Brothers, Inc.

**Background:**
The contract includes installation of approximately five-hundred (500) linear feet of new guardrail at the following locations:

- Between the corner of SE 29th Street and 196th Avenue SE (Waverly Hills)
- Louis Thompson Hill Road SE
- 222nd Place NE

There are a number of guidelines used to identify areas where guardrail may be needed. These guidelines include, but are not limited to the following:

- Embankments with drops exceeding eight (8) feet
- Limited vegetation along shoulders
- Residential properties below embankments
- Slopes greater than 2Horizontal:1Vertical after the shoulders
- Accident history or history of vehicles leaving the roadway

**Financial Impact:**

This work is funded through the 2017 Roadway Fund (101) and it is within the adopted budget.

| | |
|---|---|
| **Account No.: 101-000-542-30-48-51** | $100,000.00 |
| 2017 Guardrail Project | ($84,311.19) |
| 2017 Guardrail Project Contingency (~10%) | ($8,400) |
| **Balance Remaining** | $7,288.81 |

**Recommended Motion:**
Move to authorize the City Manager to award and execute a contract with *Petersen Brothers, Inc.* for the construction of the 2017 Guardrail Project in the amount of $84,311.19 and to administer a construction contingency in the amount of $8,400.

Exhibit 1

BR: generalMxd_PdriveMeltdown.mxd 3-8-2017

Exhibit 1

# SITE 1 – WAVERLY HILLS
# LOCATION: 2930 196TH AVE SE

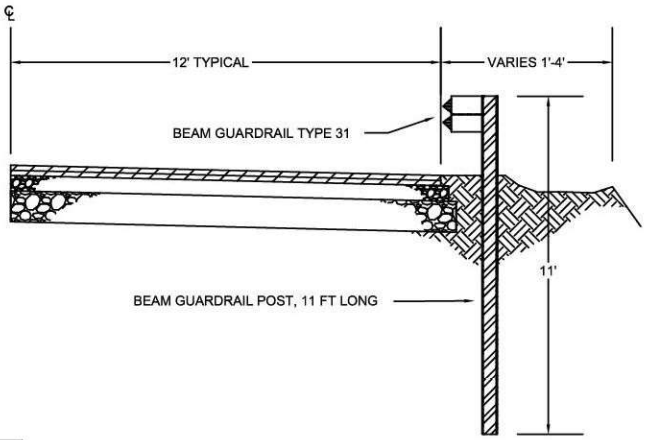


| WAVERLY HILLS | | |
|---|---|---|
| BID ITEM | QUANTITY | PAYMENT TYPE |
| BEAM GUARDRAIL TYPE 31 | 78 | LF |
| BEAM GUARDRAIL TYPE 31 11FT LONG POST | 242 | LF |
| BEAM GUARDRAIL TYPE 31 NON-FLARED TERMINAL | 2 | EA |
| BEAM GUARDRAIL BLOCK | 22 | EA |

CONSTRUCTION NOTES:

1. CONFIRM GUARDRAIL LIMITS WITH ENGINEER BEFORE INSTALLING.
2. INSTALL TYPE 31 GUARDRAIL WITH POSTS AND TYPE 31 NON–FLARE TERMINALS ACCORDING TO WSDOT SPECS (8–11) AND PLANS. APPROXIMATE 28' TAPER FOR BOTH TERMINALS (5 POSTS MINIMUM).
3. PREPARE THE EXISTING SUBGRADE BEHIND THE GUARDRAIL BY REMOVING THE TOPSOIL.
4. INSTALL SILT FENCE, CATCH BASIN SOCKS AND OTHER NECESSARY SEDIMENT/WATER POLLUTION CONTROL PRIOR TO CONSTRUCTION AND REPLACE WHEN NECESSARY.
5. DO NOT REMOVE ASPHALT PAVEMENT DURING ROADWAY EXCAVATION.

CITY OF SAMMAMISH
DEPARTMENT OF PUBLIC WORKS

2017 GUARDRAIL PROJECT
SITE 1 – WAVERLY HILLS

| DWN | SCALE | DATE | SHEET |
|---|---|---|---|
| BR | N.T.S. | 3/15/17 | |

2017 Guardrail Plans.dwg


Provided to Builders Exchange of WA, Inc. For usage Conditions Agreement see www.bxwa.com - Always Verify Scale

Exhibit 1

# SITE 3 – LOUIS THOMPSON
# LOCATION: 201ST LOUIS THOMPSON SE

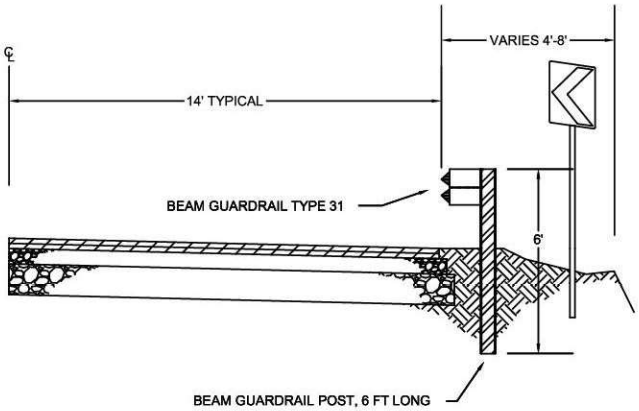


| LOUIS THOMPSON EAST | | |
|---|---|---|
| BID ITEM | QUANTITY | PAYMENT TYPE |
| BEAM GUARDRAIL TYPE 31 | 188 | LF |
| BEAM GUARDRAIL TYPE 31 6FT LONG POST | 240 | LF |
| BEAM GUARDRAIL TYPE 31 NON-FLARED TERMINAL | 2 | EA |
| BEAM GUARDRAIL BLOCK | 40 | EA |
| REMOVE AND REPLACE W-08 SIGNS | 2 | EA |

CONSTRUCTION NOTES:

1. CONFIRM GUARDRAIL LIMITS WITH ENGINEER BEFORE INSTALLING.
2. INSTALL TYPE 31 GUARDRAIL WITH POSTS AND TYPE 31 NON–FLARE TERMINALS ACCORDING TO WSDOT SPECS (8–11) AND PLANS. APPROXIMATE 28' TAPER FOR BOTH TERMINALS (5 POSTS MINIMUM).
3. PREPARE THE EXISTING SUBGRADE BEHIND THE GUARDRAIL BY REMOVING THE TOPSOIL.
4. INSTALL SILT FENCE, CATCH BASIN SOCKS AND OTHER NECESSARY SEDIMENT/WATER POLLUTION CONTROL PRIOR TO CONSTRUCTION AND REPLACE WHEN NECESSARY.
5. DO NOT REMOVE ASPHALT PAVEMENT DURING ROADWAY EXCAVATION.
6. CONFIRM W–08 SIGN LOCATIONS WITH ENGINEER PRIOR TO INSTALLATION AND INSTALL PER WSDOT SPECS (8–21).

| CITY OF SAMMAMISH<br>DEPARTMENT OF PUBLIC WORKS | 2017 GUARDRAIL PROJECT<br>SITE 3 – LOUIS THOMPSON | | | |
|---|---|---|---|---|
| | DWN<br>BR | SCALE<br>N.T.S. | DATE<br>3/15/17 | SHEET |

2017 Guardrail Plans.dwg


Provided to Builders Exchange of WA, Inc. For usage Conditions Agreement see www.bxwa.com - Always Verify Scale

Exhibit 1

Exhibit 1

# SITE 4 – INGLEWOOD RIDGE
# LOCATION: 737 222ND PL NE

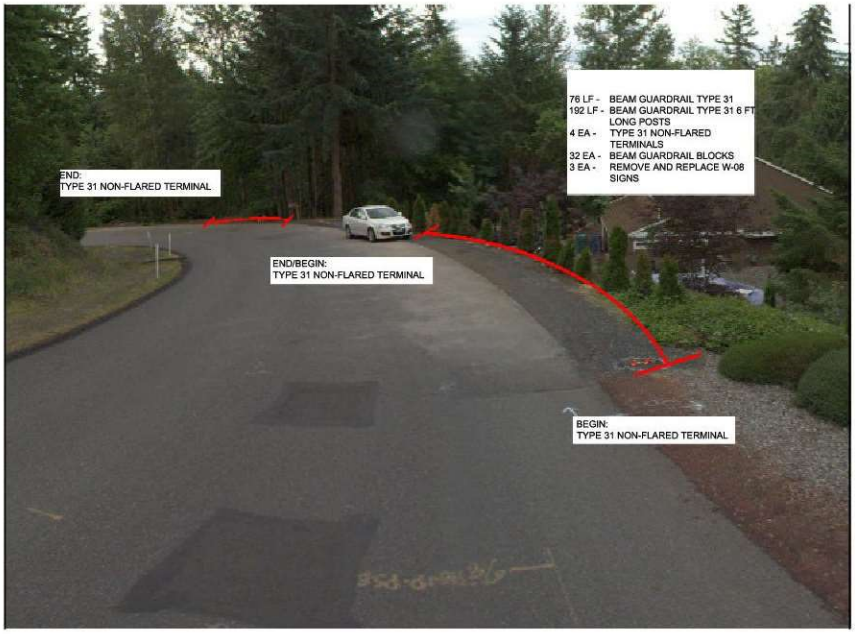


CONSTRUCTION NOTES:

1. CONFIRM GUARDRAIL LIMITS WITH ENGINEER BEFORE INSTALLING.
2. INSTALL TYPE 31 GUARDRAIL WITH POSTS AND TYPE 31 NON–FLARE TERMINALS ACCORDING TO WSDOT SPECS (8–11) AND PLANS. APPROXIMATE 28' TAPER FOR BOTH TERMINALS (5 POSTS MINIMUM).
3. CONFIRM W–08 SIGN LOCATIONS WITH ENGINEER PRIOR TO INSTALLATION AND STILL PER WSDOT SPECS (8–21).
4. INSTALL POST SLEEVES A MINIMUM OF SIX INCHES INTO SUBGRADE.
5. PREPARE THE EXISTING SUBGRADE BEHIND THE GUARDRAIL BY REMOVING THE TOPSOIL.
6. DO NOT REMOVE ASPHALT PAVEMENT AND HMA THICKENED EGDE DURING ROADWAY EXCAVATION.
7. DO NOT REMOVE EXISTING HEDGES DURING ROADWAY EXCAVATION.

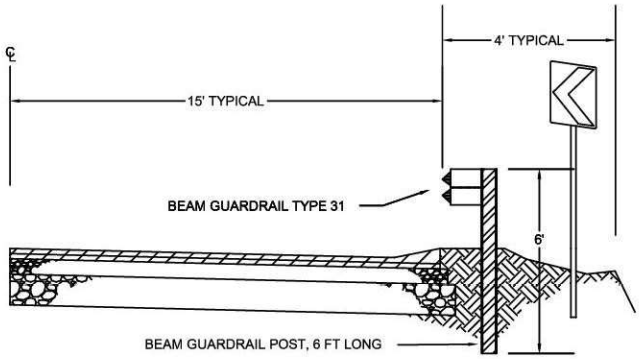


| INGLEWOOD RIDGE | | | |
|---|---|---|---|
| BID ITEM | LOWER SECTION | UPPER SECTION | PAYMENT TYPE |
| BEAM GUARDRAIL TYPE 31 | 38 | 38 | LF |
| BEAM GUARDRAIL TYPE 31 6FT LONG POST | 96 | 96 | LF |
| BEAM GUARDRAIL TYPE 31 NON-FLARED TERMINAL | 2 | 2 | EA |
| BEAM GUARDRAIL BLOCK | 16 | 16 | EA |
| REMOVE AND REPLACE W-08 SIGNS | 2 | 1 | EA |

CITY OF SAMMAMISH
DEPARTMENT OF PUBLIC WORKS

2017 GUARDRAIL PROJECT
SITE 4 – INGLEWOOD RIDGE

| DWN | SCALE | DATE | SHEET |
|---|---|---|---|
| BR | N.T.S. | 3/15/17 | |

2017 Guardrail Plans.dwg


Provided to Builders Exchange of WA, Inc. For usage Conditions Agreement see www.bxwa.com - Always Verify Scale

Exhibit 1

Exhibit 2

## Bid Opening

## City of Sammamish Public Works Department

Project: **2017 Guardrail Project**

Bid Date & Time: **Apr. 6th, 2017, 2:00 pm**

| | Bidder | Signed Proposal | Schedule of Prices (Addendum No. 1) | Bid Security Form | Acknowlegement of Receipt of Addenda | Bidder Information and Signature | Non-Collusion and Debarment Affidavit | Minimum Wage Affidavit Form | [1]List of Subcontractors | [2]Statement of Bidder's Qualifications | [2]Responsible Bidder Criteria | Total Bid Price |
|---|---|---|---|---|---|---|---|---|---|---|---|---|
| 1 | Petersen Brothers, Inc. | X | X | X | X | X | X | X | X | X | X | $84,311.19 |
| 2 | Dirt & Aggregate Interchange, Inc. | X | X | X | X | X | X | X | X | X | X | $117,777.00 |
| 3 | | | | | | | | | | | | |
| 4 | | | | | | | | | | | | |
| 5 | | | | | | | | | | | | |
| 6 | | | | | | | | | | | | |
| 7 | | | | | | | | | | | | |
| 8 | | | | | | | | | | | | |
| 9 | | | | | | | | | | | | |
| 10 | | | | | | | | | | | | |

Engineer's Estimate: $97,130

[1]Form must be submitted within one hour after published bid submittal time.

[2]Form must be submitted within 48 hours after the published bid submittal time.

budget:

Exhibit 2

# City Council Agenda Bill

**Meeting Date:** May 2, 2017 Date Submitted: 4/24/2017

**Originating Department:** Admin Services

**Clearances:**

- ☑ Attorney
- ☑ Admin Services
- ☑ City Manager
- ☐ Community Development
- ☐ Finance & IT
- ☐ Parks & Recreation
- ☐ Public Safety
- ☐ Public Works

**Subject:** Proposed amendments to the Eastside Fire & Rescue (EFR) Interlocal Agreement (ILA), extending the duration of the current ILA, updating the right to withdraw terms and changing the funding formula for the phase in/calculation years

**Action Required:** Motions approving three separate resolutions authorizing the City Manager to sign amendments to the existing EFR ILA. The first motion seeks approval of a resolution that would amend current ILA by extending the current term by 5 years until December 31, 2026 (current expiration is December 31, 2021) with ten-year automatic renewal provisions (existing renewal term is seven years). The second motion seeks approval of a resolution that would amend the current ILA by changing the Right to Withdraw provisions from one-year prior to the end of the ILA term to three years. The third motion seeks approval of a resolution that would stipulate funding formula updates every two years beginning in 2022 under the Phase In/Calculation provisions.

**Exhibits:**

1. Draft Amendments to the Interlocal Agreement
2. Resolution amending current ILA by extending the current term ILA by 5 years until December 31, 2026 with ten-year automatic renewal provisions
3. Resolution amending the current ILA by changing the Right to Withdraw provisions from one-year prior to the end of the ILA term to three years
4. Resolution amending the current ILA by stipulating funding formula updates every two years beginning in 2022 under Phase In/Calculation provisions

**Budget:** N/A

**Summary Statement:**

The City of Sammamish contracts with Eastside Fire & Rescue (EFR) for fire and rescue services. The current Interlocal Agreement (ILA) runs from January 1, 2015 through December 31, 2021. The EFR Board of Directors has recently recommended three amendments to the current ILA in order to create additional certainty for the agency and to better accommodate long-range planning horizons. The

proposed amendments presented here are recommended unanimously by the EFR Board of Directors and require approval by each partner entity before they can be enacted.[1]

**Background:**

In 2016, EFR adopted a 2017-2021 Strategic Plan and is already making steady progress on implementing its goals and objectives. One of the Strategic Plan's priorities is to create long-term stability for EFR, with an objective to "develop a strategy to maximize the long term commitment from the Inter-Local Agreement (ILA) Partners." The rationale for this objective is to create longer-term planning horizons for a variety of mission-critical activities, including facilities and capital investments and employee development and retention. To meet this objective, the EFR Board of Directors is unanimously recommending a series of three amendments to the ILA, as follows:

- **Term:** The first amendment extends the duration of the current ILA by five-years from December 31, 2021 to December 31, 2026. This amendment also increases the duration of automatic ILA renewals from seven-years to ten-years. This amendment will allow EFR to better engage in long-term planning.

- **Right to Withdraw:** The second amendment increases from one-year to three-years the amount of time prior to the end of the ILA (or extension) term that a party to the ILA can notify EFR of its intent to withdraw from the agreement. This amendment would give all parties to the agreement adequate lead time to plan in the event that a party wishes to exit the system.

- **Phase In/Calculation Years:** The third amendment is a technical change that stipulates that the funding formula would be updated every two years beginning in 2022.

While the EFR Board has unanimously recommended the three aforementioned amendments, they cannot be enacted without approval from the governing bodies of each of the partner agencies. The three Resolutions attached to this agenda bill would allow the Sammamish City Council to take formal action on these recommended amendments. The EFR Board has requested that partner agencies take up each of the three amendments as a separate action items.

**Financial Impact:**

N/A

**Recommended Motion:**

Council action is required on three separate, but inter-related resolutions, as follows:

- A motion approving a resolution indicating Sammamish's support for extending the EFR ILA duration from December 31, 2021 to December 31, 2026 and increasing the duration of automatic ILA renewals from seven-years to ten-years.

[1] Partner entities in EFR include the cities of Sammamish, Issaquah and North Bend and Fire Districts 10 and 38. Similar to Sammamish, the partner entities are in the process of seeking approval of the proposed ILA amendments from their respective governing bodies.

- A motion approving a resolution indicating Sammamish's support for increasing from one-year to three-years the amount of time prior to the end of the ILA (or extension) term that a party to the ILA can notify EFR of its intent to withdraw from the agreement.

- A motion approving a resolution indicating Sammamish's support for stipulating that the funding formula outlines under the Phase In/Calculation Years provisions would be updated every two years beginning in 2022.

Exhibit 1

# EASTSIDE FIRE & RESCUE INTERLOCAL AGREEMENT

THIS AGREEMENT is entered into by and between KING COUNTY FIRE PROTECTION DISTRICT NO. 10, King County, Washington ("District 10"), FIRE DISTRICT 38, King County, Washington ("District 38"), the CITY OF ISSAQUAH, Washington ("Issaquah"), the CITY OF NORTH BEND, Washington ("North Bend"), and the CITY OF SAMMAMISH, Washington ("Sammamish"), all Washington municipal corporations (collectively, the "Parties").

## RECITALS

**A.** On January 1, 1999, District 10, District 38, Issaquah and North Bend commenced operation of Eastside Fire & Rescue, a fire and emergency medical services joint department, pursuant to Chapter 39.34 RCW. On January 1, 2001, Sammamish joined Eastside Fire & Rescue.

**B.** The original Interlocal Agreement establishing Eastside Fire & Rescue expired on December 31, 2007 ("Original Agreement") (The Original Agreement consisted of the "Agreement for Joint Operation of Fire and Emergency Medical Services" between District 10 and Issaquah, as amended by the "District No. 38 and North Bend Amendment to the Agreement for Joint Operation of Fire and Emergency Medical Services," by the "City of Sammamish Amendment to the Agreement for Joint Operation of Fire and Emergency Medical Services," and by the "Equipment Funding (Separate Ownership) Amendment to Agreement for Joint Operation of Fire and Emergency Medical Services").

**C.** The Parties extended the operation of Eastside Fire & Rescue another seven years to December 31, 2014, by amending and replacing in its entirety the Original Agreement with another agreement ("2008 Agreement").

**D.** The Parties ~~desire to~~ extended the operation of Eastside Fire & Rescue another seven years to December 31, 2021, and ~~to~~ amended and replaced in its entirety the 2008 Agreement in accordance with the terms and conditions of ~~this~~ another new agreement ("2015 Agreement").

**~~D.~~E.** In March 2017, the Parties desire to extend the operation of Eastside Fire & Rescue from December 31, 2021 to December 31, 2026, an extension of five years, and to replace successive seven year renewals with successive ten year renewals.

## AGREEMENT

The Parties agree as follows:

**1. Definitions**. The following terms shall have the following meanings:

1.1. "Board of Directors" or "Board" means the joint board of the Joint Fire Department, as described in Paragraph 3.

1.2. "Fire Chief" means the chief of the Joint Fire Department appointed by the Board of Directors.

1.3. "Fire Department" or "Joint Fire Department" means the combined operating fire departments of Issaquah, North Bend and Sammamish (collectively, the "Cities") and District 10 and District 38 (collectively, the "Districts"). The Joint Fire Department shall be known as "Eastside Fire & Rescue."

1.4. "Personal property" means all property that is owned or used by the Joint Fire Department and that is not land or buildings, including but not limited to vehicles, equipment, durable goods, furniture, fixtures, small tools and supplies.

1.5. "Real property" means all land and buildings that are used by the Joint Fire Department.

**2. Term**. This Agreement shall be effective on January 1, 2015, and shall terminate on December 31, ~~2021~~2026. It shall be renewed automatically thereafter for successive ~~seven~~ten-year terms.

**3. Board of Directors**.

3.1. **Authority**. A Board of Directors shall administer, operate, and manage the Joint Fire Department and all jointly owned or separately owned real and personal property of the Parties. The Board's authority shall include execution of contracts on behalf of the Joint Fire Department for the provision of goods and services, including the authority to enter into or amend existing or future employment contracts with the Fire Chief and such other employees as shall be authorized by the Board. The Board further shall have such additional authority as may from time to time be conferred on it by the legislative bodies of all of the Parties. Except as provided in paragraphs 7, 12.3 and 12.4, the Board shall have no authority to modify or revise the terms of this Agreement.

3.2. **Appointment**. The Board of Directors shall consist of eight elected officials, each of whom shall be currently serving as elected officials of the governing body of one of the Parties. An "elected official" shall be a person elected by the voters to the governing body of one of the Parties, or duly appointed to such an elected position to fill a vacancy on such governing body. The Issaquah City Council shall appoint two Board members, the North Bend City Council shall appoint one Board member, the Sammamish City Council shall appoint two Board members, the

District 10 Board of Fire Commissioners shall appoint two Board members, and the District 38 Board of Fire Commissioners shall appoint one Board member. Each Party also shall appoint one of its respective elected officials as an alternate Board member. If a Party must appoint two alternate Board members, the Party may appoint the same elected official to both of the alternate Board member positions. The Board members and the alternates shall serve at the pleasure of each respective Party.

3.3. **Meetings**. A quorum of the Board of Directors shall consist of five members or their alternates. Unless actions of the Board are required by law to be in the form of a resolution, the actions of the Board may be by motion or resolution. Except as provided otherwise in this Agreement, at least five Board members or alternates shall approve a motion or resolution. The Board shall approve motions or resolutions regarding changes to the revenue formula of paragraph 7 by unanimous vote of the entire membership of the Board. All meetings of the Board shall be held in compliance with the Open Public Meetings Act, Chapter 42.30 RCW. The date, time, and place of the regular meetings of the Board shall be established by resolution of the Board. The Board shall prepare minutes of its meetings, which shall be distributed regularly to the legislative bodies of the Parties.

3.4. **Committees and Task Forces**. The Board of Directors shall have authority to form and appoint committees and task forces to assist the Board in the performance of its duties and responsibilities.

**4.** **Services**. The Board of Directors shall identify and provide services in accordance with applicable laws and regulations. Services within the boundaries of the Parties include, but are not limited to: fire prevention; fire suppression; emergency medical; rescue; and hazardous materials incident response. Within the boundaries of the Parties, the Board shall provide the following additional services in conformance with City and County ordinances: fire code inspection and enforcement; fire code pre-construction building plan review. The Parties recognize that King County has statutory jurisdiction to enforce the Fire Marshal provisions of the County Code within the unincorporated areas served by the Parties.

**5.** **Budget**. The Fire Chief or designee shall prepare a proposed budget for a succeeding calendar year and a multi-year projection pursuant to a process established by the Board of Directors. The process shall meet the service needs and requirements of this Agreement and shall comply with applicable laws and regulations. The legislative bodies of the Parties shall adopt a budget before the end of the calendar year in accordance with applicable laws and regulations. The Board may submit a recommended budget amendment to the legislative bodies of the Parties, which may adopt a budget amendment in accordance with

applicable laws and regulations. The Board of Directors shall establish a benchmark to evaluate cost effectiveness.

6. **Finances -- Special Fund**. The Board of Directors shall create a special operating fund at the King County Financial Management Office for the payment of the operating costs and expenses of the Joint Fire Department. The Board shall be responsible for the proper management and accounting of all funds of the Joint Fire Department. The financial affairs of the Board shall be conducted in accordance with applicable laws and regulations.

7. **Revenues -- Financial Contributions**. Each Party shall contribute funds to support the maintenance and operation of the Joint Fire Department in accordance with the annual revenue formula of this paragraph. The Parties shall pay the financial contributions in equal monthly installments or as otherwise approved by the Board. The revenue formula for the 2015 annual financial contributions of the Parties is set forth in **Exhibit A**, which is attached and incorporated into this Agreement. Pursuant to paragraph 3.3, the Board of Directors may approve a change in the revenue formula on or before May 30 of the year preceding the calendar year in which the amended revenue formula will become effective. Any amendment to the revenue formula shall take into account the Parties as a whole and individually, considering any criteria deemed appropriate by the Board. The amended revenue formula shall be filed with the Secretary of the Board and shall be attached to this Agreement. A Party that has filed a notice of withdrawal from the Joint Fire Department pursuant to paragraph 16.1 shall not participate in any vote regarding the consideration and approval of an amendment to the revenue formula that is effective after the withdrawal. The Parties also shall contribute all emergency medical service taxes.

8. **Major Capital Expenditures -- Bond Issues**. If the Board of Directors determines that major capital expenditures for real or personal property are necessary for the proper operation of the Joint Fire Department, and should be financed through a bond issue (voter approved or legislative body approved) or levy of excess taxes, the Board shall adopt a report and recommendation and submit it to the legislative bodies of the Parties. If one Party fails to adopt the recommendation, the proposal shall be rejected. If all Parties adopt the recommendation, each Party shall adopt appropriate legislative enactments to authorize a legislative body approved bond issue, or they shall submit appropriate ballot propositions to the voters at an election selected by all Parties. If the ballot proposition is not approved in one jurisdiction, the proposal shall fail.

9. **Employer.** District 10 shall serve as the employer of all employees and volunteers of the Joint Fire Department, pursuant to applicable laws and regulations. The Parties acknowledge that District 10 serves as the employer of the Joint Fire Department solely for the convenience of the Parties. The adopted budget for the Joint Fire Department shall contain sufficient funds to pay all wages, salaries, employment benefits, payroll taxes, and other expenses of employees and volunteers. The Joint Fire Department shall pay the LEOFF 1

benefits that the employer is obligated to pay to the LEOFF 1 firefighters who retired as employees of the fire departments of the Parties prior to commencement of the Joint Fire Department and who retired as employees of District 10 after commencement of the Joint Fire Department ("LEOFF 1 Payments"). The LEOFF 1 payments shall be deemed a liability of the Joint Fire Department, for which each Party shall remain liable and responsible after withdrawal from the Joint Fire Department or after expiration of this Agreement, in accordance with the revenue formula provided for in paragraph 7 in effect at the time of notice of withdrawal or the expiration of this Agreement. In addition to the LEOFF 1 payments, District 10 may request the Parties to share other costs, expenses and liabilities for any claims, judgments, damages or expenses arising from District 10's Employer status by filing a written request with the Board of Directors. The Board of Directors shall approve or deny the request within 30 days of receipt of the request using procedures and guidelines to be adopted by the Board and subject to the provisions set forth in paragraphs 3.3 and 7.

**10. Employees**. The Fire Chief shall be hired, disciplined and discharged by a majority vote of all members of the Board of Directors. The Fire Chief shall report to and be supervised by the Board. The Board shall conduct annually an evaluation of the performance of the Fire Chief, or more frequently if requested by the Board or the Fire Chief. The Fire Chief shall hire, discipline, discharge and supervise all other employees and all volunteers of the Joint Fire Department.

**11. Fire Marshal Appointment**. Each City, in accordance with its respective fire code, shall appoint the Fire Marshal of the Joint Fire Department as the fire marshal and fire prevention officer of the City. The Fire Marshal, while acting as the fire marshal and fire prevention engineer of the City, shall report to and be supervised by the city manager or city administrator, as applicable, of the City. The Fire Marshal shall cooperate with city building officials and the city administrator or city manager, as applicable, to administer, enforce and carry out the City's fire code. All court costs and other legal costs incurred in the enforcement of the City's fire code shall be paid by the City and shall not be considered an operating expense of the Joint Fire Department. Any award of costs, attorneys' fees, penalties or fines in an enforcement action shall be the property of the City.

**12. Property Ownership and Funding.** All real and personal property that is acquired by a Party or the Parties for use by the Joint Fire Department shall be owned and funded as follows:

12.1. **Real Property Ownership.** All real property that is acquired by a Party prior to becoming a member of the Joint Fire Department shall remain the real property of that Party. Upon becoming a member of the Joint Fire Department, the Party shall file with the Board of Directors an inventory of such before-acquired real property. All real property acquired jointly by two or more Parties after becoming members of the Joint Fire Department shall be the joint real property of those Parties, and all real property

acquired separately by a Party after becoming a member of the Joint Fire Department shall be the separate real property of that Party. The Joint Fire Department shall have exclusive access to and control over all real property.

12.2. **Personal Property Ownership.** Upon becoming a member of the Joint Fire Department, a Party shall file with the Board of Directors an inventory, a statement of fair market value and a depreciation schedule of all personal property acquired by the Party prior to becoming a member of the Joint Fire Department. Exhibit B, which is attached and incorporated into this Agreement, lists and describes personal property of the Parties over which the Joint Fire Department has exclusive access to and control over, and indicates whether the personal property of a Party is considered separate personal property of the Party or joint personal property of the Joint Fire Department.

12.3. **Personal Property Replacement.** The Board of Directors shall fund, replace, value, and depreciate all personal property as listed and described in **Exhibit B**. **Exhibit B** shall include the establishment and funding of a special account for replacement of personal property. In conjunction with the annual budget process of paragraph 5, the Board may, by motion, amend **Exhibit B**. The motion shall be reduced to writing, shall be filed with the Secretary of the Board, and shall be attached to this Agreement.

12.4. **Real Property Maintenance and Repair.** The Board of Directors shall fund the maintenance and repair of all real property in accordance with **Exhibit C**, which is attached and incorporated into this Agreement. **Exhibit C** shall include the establishment and funding of a special account for maintenance and repair of real property. In conjunction with the annual budget process of paragraph 5, the Board may, by motion, amend **Exhibit C.** The motion shall be reduced to writing, shall be filed with the Secretary of the Board, and shall be attached to this Agreement.

12.5. **Improvements to Real Property.** The Board of Directors shall determine and carry out all improvements to real property. Upon request by a Party or Parties, the Board may carry out improvements to separate real property that are paid for entirely by a Party or Parties.

**13. Indemnification and Hold Harmless**. Each Party shall protect, defend, indemnify, and hold harmless all other Parties to this Agreement, and their officers, employees and agents, from any and all costs, claims, judgments or awards of damages, arising out of or in any way resulting from the negligent acts or omissions of such Party, and its officers, employees and agents, in performing or administrating this Agreement. This indemnification and hold harmless shall not apply to the acts and omissions of the Party that serves as the employer pursuant to paragraph 9 of this Agreement.

**14. Insurance**. The Board of Directors shall provide insurance coverage for all operations, facilities, equipment, and personnel of the Joint Fire Department.

**15. Operational Rules and Regulations**. The Board of Directors shall, from time to time, adopt and implement necessary rules and regulations consistent with this Agreement to govern operations of the Joint Fire Department.

**16. Withdrawal by Party**.

16.1. **Right to Withdraw.** Any Party may withdraw from the Joint Fire Department at the end of the initial ~~seven~~twelve-year term, or at the end of any successive ~~seven~~ten-year term, by filing with the other Parties a notice of withdrawal in January of 202~~6~~4 or in January of the ~~seventh~~ ~~tent~~heighth year of ~~the initial term or~~ any succeeding term, as applicable.

16.2. **Responsibility and Liability Upon Withdrawal.** If the employer of the Joint Fire Department lays off employees as a result of the withdrawal, the withdrawing Party shall be responsible for payment of accrued employee benefits, continuation of employee benefits required by law and unemployment compensation for a period not to exceed two years. For purposes of this paragraph, "employee" means an individual whose employment with the Joint Fire Department has been terminated as a direct result of the party withdrawing from the Joint Fire Department. If the withdrawing Party establishes its own fire department upon withdrawal, it shall give preference in hiring to all laid off employees, if authorized by law. After withdrawal, the withdrawing Party shall remain liable and responsible for its pro rata share of all liabilities, payments and obligations incurred by or attributed to the Joint Fire Department during the membership of the withdrawing Party in the Joint Fire Department, in accordance with the revenue formula provided for in paragraph 7 in effect at the time of notice of withdrawal. Within 30 days after the date of withdrawal, the Joint Fire Department shall settle with the withdrawing Party all liabilities, payments and obligations that became fixed on or before the date of withdrawal. Within 30 days after any liabilities, payments or obligations become fixed after the date of withdrawal, the Joint Fire Department shall settle such liabilities, payments and obligations with the withdrawing Party.

16.3. **Return of Property.** The Board shall return all separate real property and separate personal property to the withdrawing Party on or before the effective date of withdrawal. The Board shall determine the fair market value of all joint real property and joint personal property. The withdrawing Party on or before the effective date of withdrawal shall receive or pay, as applicable, in cash or property, its percentage or ratio of the net fair market value of the joint real property and the joint personal property, in accordance with the withdrawing Party's equity in the Joint Fire Department as determined by the financial statements of the Joint Fire

Department for the year of withdrawal. If the withdrawing Party disputes the Board's determination of fair market value of the joint real property or joint personal property, the withdrawing Party shall pay for and accept an appraisal of the fair market value of the property by an appraiser selected by the Party and the Board.

**17. Termination by All Parties.** Upon expiration of this Agreement, including automatic renewals thereof, the Parties shall be governed by the following provisions:

17.1. **Preference in Hiring.** Any Party that establishes a new fire department upon expiration of this Agreement shall give preference in hiring to all laid-off employees of the Joint Fire Department, if authorized by law.

17.2. **Liability.** A Party shall remain liable and responsible for its pro rata share of all liabilities, payments and obligations incurred by or attributed to the Joint Fire Department during the membership of the Party in the Joint Fire Department, in accordance with the revenue formula of paragraph 7 for the last year of the Joint Fire Department.

17.3. **Return of Property.** The Board shall return all separate real and personal property to each Party. The Board shall determine the fair market value of all joint real property and all joint personal property. Each Party shall receive or pay, as applicable, in cash or property, its percentage or ratio of the net fair market value of the joint real property and personal property, in accordance the Party's equity in the Joint Fire Department as determined by the financial statements of the Joint Fire Department for the last year of the Joint Fire Department. If a Party disputes the Board's determination of fair market value of the property, the Party shall pay for and accept an appraisal of the fair market value of the property by an appraiser selected by the Party and the Board.

**18. Annexations**. The Parties acknowledge that upon annexation by a City of the territory of a District, the provisions of RCW 35.02.190, 35.02.200, 35.02.205, 35A.14.380, 35A.14.801 and 35A.14.400 require, in some cases, the transfer of assets and/or payment of cash, properties or contracts for services between the City and the District. The Parties agree that the asset transfer and payment required by such statutes shall be accounted for on the financial statements and audit reports of the Joint Fire Department, and that the final accounting for the asset transfer and payment shall occur on withdrawal of a City or a District from the Joint Fire Department or on expiration of this Agreement, as applicable. The Parties further agree that the annual financial contributions of the City and the District involved in the annexation, pursuant to the revenue formula, shall be changed for the annexed territory on the date that the City is entitled to receive property taxes from the annexed territory.

**19. Incorporations**. If a city formed subsequent to execution of this Agreement incorporates within all or a portion of a District, all powers, duties and decisions to be made by the District pursuant to Chapters 35.02, 35A.14 and 52.04 RCW, as presently existing or as amended, shall be exercised by the Board of Fire Commissioners rather than the Board of Directors.

**20. Volunteers**. The Joint Fire Department acknowledges the role and need for volunteer responders, and shall make available opportunities for citizens of the Parties to volunteer in their communities by taking active efforts to recruit, train and maintain volunteers.

**21. Addition of Parties**. The legislative body of a governmental agency or entity that either abuts or is in close proximity to a Party may adopt and file with the Board of Directors a resolution to join the Joint Fire Department. Upon receipt of the request, the Board of Directors, by affirmative vote of a majority of the entire membership of the Board, may by motion or resolution authorize consideration of the request through a plan and process adopted by such motion or resolution. The plan and process shall include necessary amendments to this Agreement and a schedule for and components of such consideration, which schedule and components shall include, but not be limited to a written report of the operational and financial impact on and philosophical compatibility with the Joint Fire Department. The Board, by affirmative vote of a majority of the entire membership of the Board, shall submit its recommendation regarding the request to the governing bodies of all Parties. To be effective, a request to join the Joint Fire Department, and any necessary amendments to this Agreement, shall be approved by resolution of all of the governing bodies of the Parties. If a Party has filed a notice of withdrawal from the Joint Fire Department pursuant to paragraph 16.1, that withdrawing Party shall not participate in any vote regarding the consideration and approval of a new Party of the Joint Fire Department. The membership of the Parties, for voting purposes on the request to join the Joint Fire Department, shall be determined without the participation of the withdrawing Party.

**22. Liaison/Administrator.** The Fire Chief shall assign one employee to serve as a Fire Liaison/Administrator to each party. The fire liaison/administrator shall perform duties as requested by the Fire Chief, which may include attendance at Party governing body or staff meetings; provided, that these duties shall not, in the opinion of the Fire Chief, interfere with or be disruptive to the overall operation and management of the Joint Fire Department.

**23. Notices**. All notices, requests, demands and other communications required by this Agreement shall be in writing and, except as expressly provided elsewhere in this Agreement, shall be deemed to have been given at the time of delivery if personally delivered or three calendar days after the time of mailing if mailed by first class mail, postage prepaid.

**24. Severability**. If any provision of this Agreement or its application is held invalid, the remainder of this Agreement or the application of the remainder of this Agreement shall not be affected.

**25. Survivorship.** The rights and duties of paragraphs 9, 13, 16.2 and 17.2 shall survive expiration of this Agreement.

**26. Entire Agreement -- Modification**. This Agreement represents the entire agreement between the Parties. No change, termination or attempted waiver of any of the provisions of this Agreement shall be binding on any of the Parties unless executed in writing by authorized representatives of all of the Parties. This Agreement shall not be modified, supplemented or otherwise affected by the course of dealing between the Parties.

**27. Benefits**. This Agreement is entered into for the benefit of the Parties to this Agreement only and shall confer no benefits, direct or implied, on any third persons.

**28. Amendment of Original Agreement and 2008 Agreement.** The 2008 Agreement is amended and replaced in its entirety by this Agreement; provided, that the property inventories filed by the Parties pursuant to the Original Agreement or the 2008 Agreement shall remain valid, unless modified by Section 12.2 of this Agreement, and the indemnification and hold harmless provisions of the Original Agreement and the 2008 Agreement shall survive.

**CITY OF ISSAQUAH**

By _____

Date _____

**KING COUNTY FIRE DISTRICT NO. 10**

By _____

Date _____

**CITY OF NORTH BEND**

By _____

Date _____

**FIRE DISTRICT 38**

By _____

Date _____

**CITY OF SAMMAMISH**

By _____

Date _____

**EXHIBIT A**

Eastside Fire & Rescue
Funding Model & Member/Party's Equity

**<u>The Funding Model (Revenue Formula)</u>**
Eastside Fire & Rescue (EF&R) prepares an annual budget for operations, equipment replacement, and capital facilities maintenance. A funding model, which is referred to in Section 7 of the Interlocal Agreement as the "revenue formula," is then used to decide the monthly contribution of each Party in support of the maintenance and operation of EF&R. The funding model is as follows:

**1 – Establish Party/Station Areas:** Through the use of GIS software, the areas within the EF&R boundaries that each career station (a station staffed by full-time employees) responds to first ("first due area") will be determined and merged with jurisdictional boundary data to establish Party/Station areas within EF&R.

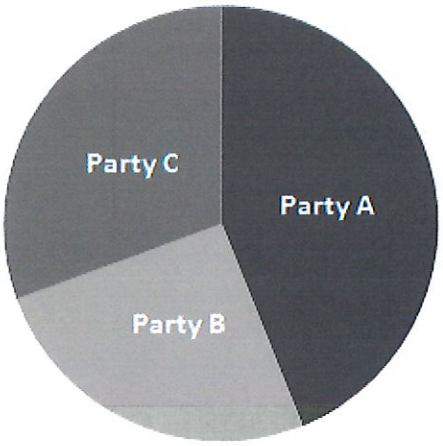


**2 – Establish Value, Coverage, and Responsibility of Parcels:** Through the use of GIS software, Member/Station Areas derived in Step 1 will be merged with King County parcel data and King County Assessor data to establish Station Coverage, Party Responsibility and Assessed Value (AV) for each parcel.

**3 – Establish Each Party's Station Assessed Value Coverage Percentage**: Using the data derived in Step 2, calculate the total AV of each Party within each station "first due area," and divide that by the total AV of all parcels covered by that station. This establishes each Party's percentage of the Assessed Value Coverage for each station.

**Ex:** Station X covers $3b in AV. Of the $3b in AV, Party A has $1.5b, Party B has $1b, and Party C has $0.5b. Party A's Assessed Value Coverage Percentage is 50% ($1.5b/$3b), Party B's is 33%, and Party C's is 17%. These percentages will be used in Step 10 to calculate each Party's Assessed Value Coverage costs for each station.

**Assessed Value Coverage Percentage**

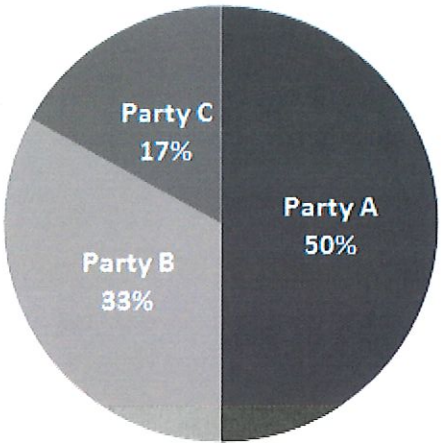


**4 – Establish Type, Coverage, and Ownership of Incidents:** Through the use of GIS software, NORCOM dispatch data will be merged with Party/Station Areas derived in Step 1 to establish Station Coverage, Party Responsibility, and Incident Type (Fire or EMS) for every incident.

**5 – Assign Fire-to-EMS Incident Weighting (75%-25%):** Multiply the number of Fire incidents in each Party/Station area by 3, and add the number of EMS incidents in each Party/Station Area. This will establish the Total Weighted Incident values within each Party/Station Area derived in Step 1.

**6 – Establish Each Party's Weighted Incident Coverage Percentage**: Using the data derived in Steps 4 and 5, calculate the total Weighted Incidents for each Party within each station "first due area," and divide that by the total Weighted Incidents covered by that station. This establishes each Party's percentage of the Weighted Incident Coverage for each station.

**Ex:** Station X covers a total of 800 weighted incidents. Of the 800 weighted incidents, Party A has 200, Party B has 200, and Party C has 400. Party A's Weighted Incident Coverage Percentage is 25% (200/800), Party B's is 25%, and Party C's is 50%. These percentages will be used in Step 11 to calculate each Party's Weighted Incident Coverage costs for each station.

**Weighted Incident Coverage Percentage**

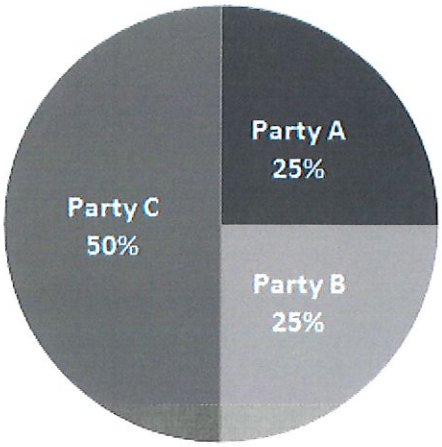


**7 – Calculate Base Station Cost:** Divide the Party's total operating contribution to the EF&R budget by the number of career stations. This determines the Base Station Cost for each station.

**8 – Calculate Total Station Costs:** For Stations 72 and 81, multiply the Base Station Cost by .75. This establishes the Total Station Cost for those two Regional Stations. For all other career stations, their Total Station Cost is determined using the formula **Base Station Cost + (.5*Base Station Cost/n)**, (where "n" is the total number of career stations minus 2 (72 and 81)).

**9 – Calculate Assessed Value and Weighted Incident Coverage Costs**: Multiply each station's Total Station Cost by .85 to establish the station's Assessed Value Coverage Cost. Multiply each station's Total Station Cost by .15 to establish the station's Weighted Incident Coverage Cost.

> **Ex:** Station X has a $2m Total Station Cost. It therefore has an Assessed Value Coverage Cost of $1.7m (.85*$2m) and an Incident Coverage Cost of $0.3m (.15*$2m).

**10 – Calculate Party Assessed Value Coverage Cost Obligation:** For each station, multiply the Party Assessed Value Coverage Percentage derived in Step 3 by the Assessed Value Coverage Cost derived in Step 9 to determine each Party's Assessed Value Coverage Cost Obligation for each station.

> **Ex:** In Step 3, Party A's Assessed Value Coverage Percentage for Station X was 50%, and in Step 9 the Assessed Value Coverage Cost of Station X was $1.7m. Therefore, Party A's Assessed Value Coverage Cost Obligation for Station X is $850k (.5*$1.7m).

**11 – Calculate Party Weighted Incident Coverage Cost Obligation:** For each station, multiply the Party Weighted Incident Coverage Percentage derived in Step 6 by the Weighted Incident Coverage Cost derived in Step 9 to determine each Party's Weighted Incident Coverage Cost Obligation for each station.

> **Ex:** In Step 6, Party A's Weighted Incident Coverage Percentage for Station X was 25%, and in Step 9 the Weighted Incident Coverage Cost of Station X was $0.3m. Therefore, Party A's Weighted Incident Coverage Cost Obligation for Station X is $75k (.25*$0.3m).

**12 – Calculate Total Individual Party Costs for Each Station:** Add the Coverage Costs determined in Steps 10 and 11 to calculate the Total Party Cost for each station.

> **Ex:** In Step 10, Party A's cost was $850k, and in Step 11 it was $75k. Therefore, Party A's Total cost for Station X is $925k ($850k+$75k).

**13 – Calculate Total Party Costs:** Add each Party's individual cost for each station to determine its Total Costs for all stations.

**14 – Phase In/Calculation Years:** Incident weighting is phased in over two periods,7 1/2% in 2015 and 15% in 2016 through 2021, using the ratios determined by the 2013 AV and 2012 NORCOM dispatch incidents to apply to 2015, 2016, 2017, and 2018 budgets to determine Party contributions. In 2018, before May 30th, the funding formula ratios shall be recalculated based on 2016 NORCOM dispatch incidents and 2017 King County AV Data and used for the 2019, 2020, and 2021 Party contribution calculations. Subsequent updates to the formula shall occur before May 30th, of every ~~fourth~~second year, beginning in 2022. Updates shall be recalculated utilizing the most recently available yearly data for NORCOM dispatch incidents and King County Assessed Valuations.

**Adjustment to the Funding Model for Annexation:**

In the event a Party annexes another Party's area after July 1, 2007, the funding model will reallocate the costs as of the effective date that the property tax collections accrue to the annexing party. The following is an example:

Party A is a fire district with AV of $1.2 billion. Party B is a city with AV of $0.8 billion. The two Parties share the use of one station. Party B annexes $0.2 billion of AV from Party A on March 1st and gives notice that the annexation is effective on April 1st. The cost center cost is $2 million of which Party A pays $1.2 million (60%) and Party B pays $800 thousand (40%).

EF&R would adjust the funding model to reflect the annexation administratively. Responsibility for payment of the costs associated with the annexed area shall transfer to the annexing Party upon the effective date of the shift of payment of property tax collections from one Party to the other. In the example above, when Party B begins receiving the real property taxes on the

newly annexed $200 million in AV, Party B shall pay an increased percentage of the station cost.

In the event of an annexation by a non-Party city of an area of a Party, or in the event of an annexation by a Party of an area outside of the total area of all Parties, the AV shall be recalculated in and for the year that the annexation becomes effective, consistent with this section, and shall continue for all succeeding years.

**Comment regarding EF&R's Financial Statement - Party's Equity of Operating Fund and all assets not addressed in Exhibit B or C:**

According to the Washington State Auditor, EF&R is a joint venture partnership operating under the equity accounting section of the Budget, Accounting and Reporting Systems (BARS). This means that as a "Partner," all value contributed by each Party, including cash, equipment, or facilities, is treated as that Party's equity in the Partnership. This begins with the first dollar and continues forward cumulatively each year.

The footnotes in EF&R's annual financial statement identify each Party's percentage of the EF&R total equity at the end of each year. The percentage, when applied to the net worth of the EF&R total equity, expresses each Party's ownership in dollars.

It does not matter that some of the equity is in equipment (not including equipment listed in Exhibit B), or the Reserve Fund (not including reserves listed in Exhibit B or C).

Exhibit 2

# CITY OF SAMMAMISH
## WASHINGTON
### RESOLUTION NO: R2017-

---

**A RESOLUTION OF THE CITY OF SAMMAMISH, WASHINGTON CITY COUNCIL, APPROVING AN AMENDMENT TO THE EASTSIDE FIRE & RESCUE INTERLOCAL AGREEMENT ESTABLISHING A THREE-YEAR NOTICE OF RIGHT TO WITHDRAW PRIOR TO THE END OF A CONTRACT TERM.**

WHEREAS, the City of Sammamish is a party to the Eastside Fire & Rescue (EFR) Interlocal Agreement (ILA), along with the cities of Issaquah and North Bend and Fire Districts 10 and 38; and

WHEREAS, EFR adopted a 2017-2021 Strategic Plan in late 2016; and

WHEREAS, the 2017-2021 Strategic Plan seeks to strengthen the long-term sustainability of EFR as an organization by developing a strategy to maximize the long-term commitment from the ILA partners; and

WHEREAS, the EFR Board of Directors unanimously recommended three amendments to the ILA that would enhance the long-term commitment from the partner agencies; and

WHEREAS, the City of Sammamish supports the priorities in the EFR Strategic Plan and is committed to the long-term success of EFR;

**NOW, THEREFORE, THE CITY COUNCIL OF THE CITY OF SAMMAMISH, WASHINGTON, HEREBY RESOLVES AS FOLLOWS:**

Section 1. The Sammamish City Council hereby approves an amendment to the Eastside Fire & Rescue (EFR) Interlocal Agreement establishing a three-year notice of right to withdraw prior to the end of a contract term.

**PASSED BY THE CITY COUNCIL AT A REGULAR MEETING THEREOF ON THE ____ DAY OF MAY, 2017.**

CITY OF SAMMAMISH

_____
Mayor Donald J. Gerend

ATTEST/AUTHENTICATED:

_____
Melonie Anderson, City Clerk

Approved as to form:

_____
Michael R. Kenyon, City Attorney

Filed with the City Clerk: April 24, 2017
Passed by the Council:
Resolution No: R2017 - ____

Exhibit 3

# CITY OF SAMMAMISH
## WASHINGTON
### RESOLUTION NO: R2017-

---

**A RESOLUTION OF THE CITY OF SAMMAMISH, WASHINGTON CITY COUNCIL, APPROVING AN AMENDMENT TO THE EASTSIDE FIRE & RESCUE INTERLOCAL AGREEMENT STIPULATING THAT THE FUNDING FORMULA WILL BE UPDATED EVERY TWO YEARS BEGINNING IN 2022.**

WHEREAS, the City of Sammamish is a party to the Eastside Fire & Rescue (EFR) Interlocal Agreement (ILA), along with the cities of Issaquah and North Bend and Fire Districts 10 and 38; and

WHEREAS, EFR adopted a 2017-2021 Strategic Plan in late 2016; and

WHEREAS, the 2017-2021 Strategic Plan seeks to strengthen the long-term sustainability of EFR as an organization by developing a strategy to maximize the long-term commitment from the ILA partners; and

WHEREAS, the EFR Board of Directors unanimously recommended three amendments to the ILA that would enhance the long-term commitment from the partner agencies; and

WHEREAS, the City of Sammamish supports the priorities in the EFR Strategic Plan and is committed to the long-term success of EFR;

**NOW, THEREFORE, THE CITY COUNCIL OF THE CITY OF SAMMAMISH, WASHINGTON, HEREBY RESOLVES AS FOLLOWS:**

Section 1. The Sammamish City Council hereby approves an amendment to the Eastside Fire & Rescue (EFR) Interlocal Agreement stipulating that the funding formula under the Phase In/Calculation Years provisions will be updated every two years beginning in 2022.

**PASSED BY THE CITY COUNCIL AT A REGULAR MEETING THEREOF ON THE ____ DAY OF MAY, 2017.**

CITY OF SAMMAMISH

_____

Mayor Donald J. Gerend

Exhibit 3

ATTEST/AUTHENTICATED:

_____
Melonie Anderson, City Clerk

Approved as to form:

_____
Michael R. Kenyon, City Attorney

Filed with the City Clerk: April 24, 2017
Passed by the Council:
Resolution No: R2017 - ____

Exhibit 4

# CITY OF SAMMAMISH
## WASHINGTON
### RESOLUTION NO: R2017-

---

**A RESOLUTION OF THE CITY OF SAMMAMISH, WASHINGTON CITY COUNCIL, APPROVING AN AMENDMENT TO THE EASTSIDE FIRE & RESCUE INTERLOCAL AGREEMENT EXTENDING THE TERM OF THE AGREEMENT FROM DECEMBER 31, 2021 TO DECEMBER 31, 2026 AND ALLOWING FOR AUTOMATIC TEN-YEAR RENEWALS.**

WHEREAS, the City of Sammamish is a party to the Eastside Fire & Rescue (EFR) Interlocal Agreement (ILA), along with the cities of Issaquah and North Bend and Fire Districts 10 and 38; and

WHEREAS, EFR adopted a 2017-2021 Strategic Plan in late 2016; and

WHEREAS, the 2017-2021 Strategic Plan seeks to strengthen the long-term sustainability of EFR as an organization by developing a strategy to maximize the long-term commitment from the ILA partners; and

WHEREAS, the EFR Board of Directors unanimously recommended three amendments to the ILA that would enhance the long-term commitment from the partner agencies; and

WHEREAS, the City of Sammamish supports the priorities in the EFR Strategic Plan and is committed to the long-term success of EFR;

**NOW, THEREFORE, THE CITY COUNCIL OF THE CITY OF SAMMAMISH, WASHINGTON, HEREBY RESOLVES AS FOLLOWS:**

Section 1. The Sammamish City Council hereby approves an amendment to the Eastside Fire & Rescue (EFR) Interlocal Agreement extending the term of the ILA from December 31, 2021 to December 31, 2026 and allowing for ten-year automatic renewals.

**PASSED BY THE CITY COUNCIL AT A REGULAR MEETING THEREOF ON THE ____ DAY OF MAY, 2017.**

CITY OF SAMMAMISH

_____

Mayor Don Gerend

Exhibit 4

ATTEST/AUTHENTICATED:

_____
Melonie Anderson, City Clerk

Approved as to form:

_____
Michael R. Kenyon, City Attorney

Filed with the City Clerk: May __, 2017
Passed by the Council:
Resolution No: R2017 - ____

# STUDY SESSION NOTES

## Study Session

**April 3, 2017**

Mayor opened the study session of the Sammamish City Council at 4:30 p.m.

**Public Comment**

*This is an opportunity for the public to address the Council. Three-minutes limit per person or 5 minutes if representing the official position of a recognized community organization***.**

Larissa Chan, 3628 255 Lane SE, spoke regarding the benefits of outdoor preschool programs in Sammamish parks.

**Topics**

- **Discussion:** Outdoor Preschool Programming in City Parks

  Jessi Bon, Deputy City Manager and Joanna Martin, Recreation Supervisor for Parks lead a discussion and showed a presentation. *(available on the Sammamish website at www.sammamish.us )*

- **Discussion:** Revisions to the Interlocal Agreement with Issaquah School District

  Jessi Bon, Deputy City Manager and Mike Sugg, Management Analysist, lead a discussion and showed a presentation. *(available on the Sammamish website at www.sammamish.us )*

- **Presentation & Discussion:** Introduction to Regional Stormwater

  Tawni Dalziel, Senior Stormwater Program Manager and Kellye Hilde, Community Development Planning Manager, gave a staff presentation *(available on the Sammamish website at www.sammamish.us )*

**Adjournment** 6:30 pm

# COUNCIL MINUTES

# Regular Meeting

## April 18, 2017

Mayor Don Gerend called the regular meeting of the Sammamish City Council to order at 6:30 pm.

**Councilmembers present:**
Mayor Don Gerend
Deputy Mayor Bob Keller
Councilmember Tom Hornish
Councilmember Kathy Huckabay
Councilmember Christie Malchow
Councilmember Ramiro Valderrama

Excused: Councilmember Tom Odell

**Staff present:**
Lyman Howard, City Manager
Jeff Thomas, Community Development Director
Angie Feser, Parks & Recreation Director
Steve Leniszewski, Public Works Director
Cheryl Paston, Public Work Deputy Director
Andrew Zagars, City Engineer
Doug McIntyre, Senior Planner
Mike Kenyon, City Attorney
Lita Hachey, Deputy City Clerk

**Roll Call/Pledge of Allegiance**

Roll was called. Councilmember Huckabay led the pledge.

**Approval of Agenda**

**MOTION**: Councilmember Valderrama moved to approve the agenda as amended. Councilmember Hornish seconded. Motion carried unanimously 6-0.

City Manager, Lyman Howard requested that Item # 10 - Resolution**:** Setting a public hearing date to consider the vacation of a portion of SE 28th Street, be removed from the agenda.

**Presentations/Proclamations**

Presentation: Republic Services Donation

Janet Pritchard from Republic Services presented the Eastside YCMA with a donation of $20,000.00. Judy Smith, YMCA Director of Program Development and Sarah Breece, YMCA Director of Philanthropy, were present to accept the donation.

**Public Comment**

Deb Sogge, President of the Chamber of Commerce - gave an update on activities. Farmers Market will open on May 10, 2017, with farmer's booths, a food rodeo, marimba band, food booths and lots of local entertainment. Jersey Mike's opens this week at the Met Market plaza.

Mary Wictor, 408 208th Ave NE, spoke regarding flooding off of Louis Thompson Hill Road and the East Lake Sammamish Parkway NE *(showed a PowerPoint presentation, available upon request to the City Clerk, manderson@sammamish.us )*.

**Consent Agenda**

Payroll for period ending March 31, 2017 for pay date April 5, 2017 in the amount of $ 360,459.81

**Approval:** Claims For Period Ending April 18, 2017 In The Amount Of $1,853,276.69 For Check No. 46972 Through 47102

**Resolution:** Granting Final Plat Approval Of The Cambridge Issaquah Falls Subdivision (AKA Copper Ridge) (15 Lots) (R2017-729)

**Resolution:** Granting Final Plat Approval To The Plat Of Gabrielle's Place **(**14 Lots) (R2017-730)

**Resolution:** Appointing One Member To The Sammamish Planning Commission (R2017-731)

**Approval:** Purchase of King County Surplus Property at Sahalee Way NE

**Approval:** Minutes from the April 4, 2017 Regular Meeting

**Approval:** Notes from the April 11, 2017 Study Session

**MOTION**: Councilmember Hornish moved to approve the consent agenda. Councilmember Malchow seconded. Motion carried unanimously 6-0.

**Public Hearing** - None

**Unfinished Business** - None

**New Business**

**Contract:** Transportation Master Plan Consultant/Fehr & Peers

Cheryl Paston, Public Works Deputy Director, and Kendra Breiland, with Fehr & Peers, gave a staff update on the contract with Fehr & Peers for the Transportation Master Plan and showed a presentation. *(Presentation available on the city website @ www.sammamish.us )*

**MOTION**: Councilmember Malchow moved to authorize the City Manager to execute a contract agreement with Fehr and Peers to provide transportation planning services to develop the Sammamish Transportation Master Plan. Councilmember Huckabay seconded. Motion carried unanimously 6-0.

**Resolution:** Setting A Public Hearing Date To Consider The Vacation Of A Portion Of 215th Avenue NE

Andrew Zagars, City Engineer, gave a staff update on the request to vacation a portion of 215th Avenue NE and showed a presentation *(Presentation available on the city website @ www.sammamish.us )*

**MOTION**: Councilmember Hornish moved to adopt the resolution No. and schedule a public hearing on May 16, 2017 for the purpose of receiving testimony and deciding on the request to vacate the portion of Right-of-Way lying along 215th Avenue NE as described. Councilmember Malchow seconded. Motion carried unanimously 6-0 (R2017-732).

**Council Reports/Committee Reports**

Councilmember Huckabay attended Eastside Transportation Partnership last Friday and gave an update. Councilmember Huckabay stated there is some issue with the ownership of the Pine Lake Fire Station and that it is not owned by Sammamish.

Councilmember Hornish attended a Human Services Committee meeting last Wednesday with a presentation from Eastside Human Services Forum.

Deputy Mayor Keller attended the Eastside Fire and Rescue (EF&R) board meeting and the discussion of an extension of interlocal agreement (ILA). A list of objectives was created at the EF&R meeting. He also attended the Finance Administrative Committee (FAC) meeting. Sammamish Drug Free coalition received a mentee grant for $10,000.

Councilmember Valderrama also attended the EF&R board meeting and gave an update.

Councilmember Malchow stated she believes the Pine Lake Fire Station is indeed owned by the City of Sammamish.

Mayor Gerend submitted a North East Mayor's meeting report in the packet. He reported on the activities of the Legislative Committee, which also includes the Deputy Mayor and Councilmember Valderrama. Discussed the request for $200,000 for the SR202 Study, change of the Sound Transit 3 - Motor Vehicle Excise Tax calculation, supported the extension of the Public Works trust fund.

Mayor Gerend directed the City Manager to report back at the next meeting to determine the ownership of the Pine Lake Fire station.

**City Manager Report**

City Manager Howard asked Council who would be attending the Association of Washington Cities (AWC) conference the week of June 20th, as the City needs three voting delegates. The following councilmembers stated they would be attending:

- Mayor Don Gerend
- Deputy Mayor Bob Keller
- Councilmember Ramiro Valderrama
- Possibly Councilmember Christie Malchow will also be attending

Mr. Howard discussed the rescheduling of the Tuesday, June 20th, Regular Meeting, that conflicts with the AWC conference and Council will discuss and resolve at the next meeting. Also the September 4, 2017 Study Session that falls on Labor Day and will be cancelled. Council decided to keep the remaining meetings as scheduled on September 5th Regular meeting, September 12th Study Session and the September 19th Regular Meeting.

He also pointed out that the purchase of the King County property along Sahalee Way NE, which is approximately 11 acres, will enhance the ability for potential road improvements and future trail connections with the Emerald Necklace.

Mr. Howard acknowledged and thanked Joe Livarchik, reporter for the Sammamish-Issaquah Reporter, for his news coverage in Sammamish. Joe will be leaving for a new assignment.

**Executive Session** – Potential Litigation pursuant to RCW42.30.110 (1)(i)

City Council retired to an executive session at 7:58 pm and returned at 8:40 pm with no action.

Meeting adjourned at 8:40 pm

_____ _____

Lita Hachey, Deputy City Clerk

Donald J. Gerend, Mayor

# City Council Agenda Bill

**Meeting Date:** **May 2, 2017** Date Submitted: 4/26/2017

**Originating Department:** Community Development

**Clearances:**

| | | |
|---|---|---|
| ☑ Attorney | ☑ Community Development | ☐ Parks & Recreation |
| ☐ Admin Services | ☐ Eastside Fire and Rescue | ☐ Police |
| ☑ City Manager | ☐ Finance & IT | ☐ Public Works |

**Subject:** An Ordinance amending the City's sign code to come into compliance with Reed v. Gilbert, address duplicative, expired, and confusing regulations, and improve code enforcement mechanisms.

**Action Required:** Conduct a Public Hearing and complete first reading of the Ordinance on the proposed amendments.

**Exhibits:**

1. Ordinance
2. Clean Draft of Amended Sammamish Municipal Code (SMC) Chapters 21A.15, 21A.45, 21B.15, and 21B.45
3. Substantive Changes to SMC Chapters 21A.15, 21A.45, 21B.15, and 21B.45
4. Strikethrough/Underline Version of Current Code
5. Kenyon Disend Memo on Regulation of Banners
6. Planning Commission Recommendation Letter
7. Written public comment from Sammamish Plateau Water

**Budget:** N/A

**Summary Statement:**

The Department of Community Development has drafted amendments to Chapters 21A.15, 21A.45, 21B.15, and 21B.45 of the Sammamish Municipal Code (SMC), which contain sign regulations for the City as a whole as well as the Town Center. This effort is in response to the decision in the 2015 United States Supreme Court case of Reed v Gilbert, which found content-based sign regulations, of which the SMC contains many, an unconstitutional restriction of free speech.

**Background:**

The Department of Community Development has drafted amendments to Sammamish Municipal Code (SMC) chapters 21A.15, 21A.45, 21B.15, and 21B.45, which contain sign regulations for the City as a whole as well as the Town Center. The primary goal of these amendments is to bring the City's sign code into compliance with the Supreme Court's 2015 decision in Reed v. Town of Gilbert, Arizona, which found that content-based sign regulations – of which the SMC contains many – are an unconstitutional

restriction on free speech. In many cases, the general framework of the content-based regulations (for example, permitted location, duration, and quantity) has been preserved, but in other cases regulations and sign categories have been merged, amended, or eliminated.

In addition to changes related to the Reed v Gilbert decision, the proposed amendments also focus on the following issues:

1. **Town Center sign code improvements.** The Town Center sign code contains outdated and overly restrictive dimensional regulations for commercial properties.
2. **Need for improved code enforcement mechanisms**. Sammamish's code enforcement officers have expressed frustration regarding the difficulty of enforcing a complicated and lengthy code, as well as with the City's inability to appropriately punish repeat offenders.
3. **Code clean-up**. The sign code contains two temporary programs that have expired and must be addressed. In addition, the sign code contains numerous provisions that are either no longer relevant, redundant, or unnecessarily confusing.
4. **Other substantive changes**. While discussing the proposed amendments, the Planning Commission requested and approved certain changes to the sign code unrelated to content neutrality, including mechanisms for reducing sign "pollution" and expanding the number of permanent residential development identification signs allowed, and reducing the number of off-site directional signs allowed per residential development.

**Financial Impact:** N/A – this effort was scheduled and budgeted in the 2017-18 Community Development Department work program.

**Recommended Motion:** N/A – a study session is scheduled for May 9 and second reading of the Ordinance is scheduled for May 16.

Exhibit 1

# CITY OF SAMMAMISH
## WASHINGTON
### ORDINANCE NO. O2017-

---

**AN ORDINANCE OF THE CITY OF SAMMAMISH, WASHINGTON, AMENDING CHAPTERS 21A.15, 21A.45, 21B.15, and 21B.45 OF THE SAMMAMISH MUNICIPAL CODE PERTAINING TO PERMANENT AND TEMPORARY SIGNS**

WHEREAS, pursuant to the provisions of state law, Chapter 35A.63 of the Revised Code of Washington (RCW) and Chapter 36.70A RCW, the Sammamish City Council has adopted the Sammamish Municipal Code (SMC), including Title 21A, which regulates land use, and Title 21B, which regulates land use in Town Center; and

WHEREAS, in 2015, in the case of Reed v. Town of Gilbert, Arizona, the Supreme Court of the United States, in a 9-0 decision, ruled that content-based sign regulations cannot survive strict scrutiny and are unconstitutional restrictions of free speech; and

WHEREAS, it is the intent of the City Council to bring the City into compliance with the findings of Reed v. Town of Gilbert, Arizona; and

WHEREAS, SMC Chapters 21A.15, 21A.45, 21B.15, and 21B.45 contain numerous content-based sign regulations; and

WHEREAS, SMC Chapters 21A.15, 21A.45, 21B.15, and 21B.45 also contain regulations and programs that are duplicative, have expired, or are difficult for the public to understand and for the City to enforce; and

WHEREAS, it is the intent of the City Council to make the sign code easier to understand for the general public and to administer and enforce for City staff; and

WHEREAS, the Planning Commission considered proposed amendments to Chapters 21A.15, 21A.45, 21B.15, and 21B.45 SMC during work sessions held on January 19, 2017, February 23, 2017, and March 16, 2017; and

WHEREAS, on April 6, 2017, the Planning Commission held a public hearing on the proposed sign code amendments, considered public comment, and made a recommendation of approval to the City Council; and

WHEREAS, on March 13, 2017, the City submitted the proposed sign code amendments to the Washington State Department of Commerce in accordance with RCW 36.70A.106; and

WHEREAS, an environmental review of the proposed sign code amendments was

conducted in accordance with the requirements of the State Environmental Policy Act (SEPA), including review of a complete SEPA checklist; and

WHEREAS, on April 19, 2017, a SEPA threshold determination of non-significance (DNS) was issued for the proposed sign code amendments and no appeals of the DNS were filed; and

WHEREAS, the City Council considered proposed amendments to Chapters 21A.15, 21A.45, 21B.15, and 21B.45 SMC during work sessions held on May 1, 2017, May 9, 2017, and May 16, 2017; and

WHEREAS, on May 2, 2017, the City Council held a public hearing on the proposed sign code amendments in order to provide further opportunity for public comment and participation; and

WHEREAS, the City Council has determined that the proposed sign code amendments meet the City's goals and objectives to regulate signs in a content-neutral manner;

**NOW, THEREFORE, THE CITY COUNCIL OF THE CITY OF SAMMAMISH, WASHINGTON, DOES ORDAIN AS FOLLOWS:**

Section 1. Chapters 21A.15, 21A.45, 21B.15, and 21B.45 SMC Amended. Sammamish Municipal Code Chapters 21A.15 ("Technical Terms and Land Use Definitions"), 21A.45 ("Development Standards – Signs"), 21B.15 ("Technical Terms and Land Use Definitions"), and 21B.45 ("Signage") are hereby amended as set forth in Attachment A.

Section 2. Severability. If any provision of this Ordinance or its application to any person or circumstance is held invalid, the remainder of the Ordinance or the application of the provision to other persons or circumstances is not affected.

Section 3. Effective Date. The Ordinance shall be published in the official newspaper of the City, and shall take effect and be in full force five (5) days after the date of publication.

**ADOPTED BY THE CITY COUNCIL AT A REGULAR MEETING THEREOF ON THE _____ DAY OF MAY 2017.**

CITY OF SAMMAMISH

_____

Mayor Donald J. Gerend

ATTEST/AUTHENTICATED:

_____
Melonie Anderson, City Clerk

Approved as to form:

_____
Michael R. Kenyon, City Attorney

| | |
|---|---|
| Filed with the City Clerk: | April 25, 2017 |
| Public Hearing: | May 2, 2017 |
| First Reading: | May 2, 2017 |
| Passed by the City Council: | |
| Publication Date: | |
| Effective Date: | |

Exhibit 1

## Chapter 21A.15

## TECHNICAL TERMS AND LAND USE DEFINITIONS

**21A.15.469.1 Flag.**
"Flag" means a fabric sheet of square, rectangular or triangular shape which is mounted on a pole, cable or rope at one (1) end.

**21A.15.469.2 Flag, government.**
"Flag, government" means any flag or badge or insignia of the United States, State of Washington, King County, City of Sammamish, or official historic plaque of any governmental jurisdiction or agency.

**21A.15.1085 Sign.**
"Sign" means any device, structure, fixture, or placard that is visible from a public right-of-way or surrounding properties and uses graphics, symbols, or written copy for the purpose of advertising or identifying any establishment, product, goods, or service. (Ord. O2003-132 § 10)

**21A.15.1086 Sign, A-Frame.**
"Sign, A-frame" means a freestanding 2-panel foldable, portable temporary sign made of rigid material.

**21A.15.1090 Sign, awning.**
"Sign, awning" means a sign painted on or attached directly to and supported by an awning. An awning may be constructed of rigid or nonrigid materials and may be retractable or nonretractable. (Ord. O2003-132 § 10)

**21A.15.1095 Sign, changing message center.**
"Sign, changing message center" means an electrically controlled sign that contains advertising messages that changes at intervals of three minutes or greater. (Ord. O2003-132 § 10)

**21A.15.1097 Sign, commercial.**
"Sign, Commercial" means a sign erected for a business transaction or advertising the exchange of goods and services.

**21A.15.1105 Sign, directional.**
"Sign, directional" means a sign that is primarily designed to guide or direct pedestrian or vehicular traffic to an area, business, place, or convenience, and may include incidental graphics such as trade names and trademarks.

**21A.15.1110 Sign, freestanding.**
"Sign, freestanding" means a permanent sign fixed directly to the ground or having one or more supports fixed directly to the ground, and being detached from any building or fence. (Ord. O2003-132 § 10)

**21A.15.1115 Sign, fuel price.**
"Sign, fuel price" means a sign utilized to advertise the price of gasoline and/or diesel fuel. (Ord. O2003-132 § 10)

**21A.15.1120 Sign, incidental.**
"Sign, incidental" means a sign, emblem or decal designed to inform the public of goods, facilities, or services available on the premises, and may include but not be limited to signs designating:

(1) Restrooms;

(2) Hours of operation;

(3) Acceptable credit cards;

(4) Property ownership or management;

(5) Phone booths; and

(6) Recycling containers. (Ord. O2003-132 § 10)

**21A.15.1125 Sign, indirectly illuminated.**
"Sign, indirectly illuminated" means a sign that is illuminated entirely from an external artificial source. (Ord. O2003-132 § 10)

**21A.15.1130 Sign, monument.**
"Sign, monument" means a freestanding sign that is above ground level and is anchored to the ground by a solid base, with no open space between the sign and the ground. (Ord. O2003-132 § 10)

**21A.15.1131 Sign, non-commercial.**
"Sign, non-commercial" means any sign that is not a commercial sign. This definition also includes signs regarding fund raising or membership drive activities for noncommercial or nonprofit entities or groups.

**21A.15.1135 Sign, off-premises directional.**
"Sign, off-premises directional" means a sign that contains no advertising of a commercial nature that is used to direct pedestrian or vehicular traffic circulation to a facility, service, or business located on other premises within 660 feet of the sign. (Ord. O2003-132 § 10)

**21A.15.1140 Sign, on-premises.**
"Sign, on-premises" means a sign that displays a message that is incidental to and directly associated with the use of the property on which it is located. (Ord. O2003-132 § 10)

**21A.15.1144 Sign, permanent.**
"Sign, permanent" means any sign which is intended to be lasting and is constructed from an enduring material such as masonry and metal which remains unchanged in position, character, and condition (beyond normal wear), and is permanently affixed to the ground, wall or building, provided the sign is listed as a permanent sign in the ordinance.

**21A.15.1145 Sign, permanent residential development identification.**
"Sign, permanent residential development identification" means a permanent sign identifying the residential development upon which the sign is located. (Ord. O2003-132 § 10)

**21A.15.1146 Sign, pole.**
"Sign, pole" means a freestanding sign having one or more supports standing directly upon the ground, and being detached from any building or fence.

**21A.15.1150 Sign, portable.**
"Sign, portable" means a sign that is capable of being moved and is not permanently affixed to the ground, a structure, or building. (Ord. O2003-132 § 10)

**21A.15.1155 Sign, projecting.**
"Sign, projecting" means any sign that is attached to and supported by the exterior wall of a building with the exposed face of the sign on a plane perpendicular to the wall of the building, projecting more than one foot from the wall of a building and vertical to the ground. (Ord. O2003-132 § 10)

**21A.15.1159 Sign, temporary.**
"Sign, temporary" means any sign, banner, pennant, or valance constructed of cloth, canvas, light fabric,

cardboard, wallboard or other like materials not permanently attached to the ground, wall or building, intended to be displayed for a short period of time only.

**21A.15.1160 Sign, time and temperature.**
"Sign, time and temperature" means an electrically controlled sign that contains messages for date, time, and temperature, which changes at intervals of one minute or less. (Ord. O2003-132 § 10)

**21A.15.1165 Sign, wall.**
"Sign, wall" means any sign painted on, or attached directly to and supported by, the wall of a building or structure. All wall signs are building-mounted signs. (Ord. O2003-132 § 10)

**21A.15.1166 Sign, window.**
"Sign, window" means any sign applied to or mounted on a window.

**21A.15.1250 Street frontage.**
"Street frontage" means any portion of a lot or combination of lots that directly abut a public right-of-way. (Ord. O2003-132 § 10)

## Chapter 21A.45

## SIGNAGE

Sections:
21A.45.010 Purpose.
21A.45.020 Permit requirements.
21A.45.030 Exempt signs.
21A.45.040 Prohibited signs.
21A.45.050 Sign area calculation.
21A.45.060 Permanent signs.
21A.45.070 Temporary signs.
21A.45.080 Legal non-conforming signs.
21A.45.090 Variance.
21A.45.100 Enforcement.

**21A.45.010 Purpose.**
The purpose of this chapter is to enhance and protect the economic vitality and visual environment of the City, allow for the expression of free speech, and promote general safety and welfare by:

(1) Regulating the type, number, location, size, and illumination of signs; and
(2) Recognizing the purpose of signs for identification and economic well-being of businesses in Sammamish; and
(3) Ensuring a safe driving environment; and
(4) Recognizing and protecting the use of the public right-of-way as a forum for non-commercial speech; and
(5) Facilitating fair and consistent content-neutral enforcement; and
(6) Safeguarding and enhancing property values, attracting new residents, and encouraging orderly development; and

(7) Allowing for limited temporary commercial signage in the public right of way, to provide a flow of commercial information to consumers to enable them to make vital decision of purchasing a home, and to further the critical public goal of providing for equal access to housing; and
(8) Upholding the goals and policies of the Comprehensive Plan.

**21A.45.020 Permit requirements.**

(1) Except as otherwise provided in this chapter, no sign shall be erected, altered, or relocated within the City without a permit issued by the City.

(2) No permit shall be required for repainting, cleaning, or other normal maintenance and repair of a permitted sign, or for sign face and copy changes that do not alter the size or structure of the sign.

**21A.45.030 Exempt signs.**
The following signs or displays are exempted from the permitting requirements of this chapter, but shall conform to the other requirements set out in this chapter:

(1) Historic plaques, gravestones, and address numbers;
(2) Official or legal notices issued and posted by any public agency or court; or
(3) Traffic control signs established by the Manual on Uniform Traffic Control Devices (MUTCD) or authorized by City of Sammamish Department of Public Works;
(4) Plaques, tablets, or inscriptions which are an integral part of the building structure or are attached flat to the face of the building, which are non-illuminated, and which do not exceed four square feet in surface area;
(5) Incidental signs, which shall not exceed two square feet in surface area; provided, that said size limitation shall not apply to signs when established and maintained by a public agency;
(6) Government flags; and
(7) Nonverbal religious symbols attached to a place of worship.

**21A.45.040 Prohibited signs.**

(1) Portable signs including, but not limited to, sandwich/A-frame signs and mobile readerboard signs, and excluding signs permitted under SMC 21A.45.070;

(2) Signs which, by reason of their size, location, movement, content, coloring, or manner of illumination may be confused with traffic control signs or signals;

(3) Signs located in the public right-of-way, except where permitted in this chapter; provided, that in no case shall temporary signs permitted under SMC 21A.45.070 be located within travel lanes or sidewalks, or be attached to traffic control signs, utility or signal poles;

(4) Posters, pennants, strings of lights, blinking lights, balloons, searchlights, and other displays of a carnival nature; except as architectural features, or on a limited basis as seasonal decorations or as provided for in SMC 21A.45.070 as temporary commercial displays;

(5) Changing message center signs, where the message changes more frequently than every three minutes; and

(6) Billboards.

**21A.45.050 Sign area calculation.**

(1) Sign area for pole signs shall be calculated by determining the total surface area of the sign as viewed from any single vantage point, excluding support structures.

(2) Sign area for letters or symbols painted or mounted directly on walls or monument signs or on the sloping portion of a roof shall be calculated by measuring the smallest single rectangle that will enclose the combined letters and symbols.
(3) Sign area for signs contained entirely within a cabinet and mounted on a wall, roof, or monument shall be calculated by measuring the entire area of the cabinet. (Ord. O99-29 § 1)

**21A.45.060 Permanent signs.**

(1) Table of Permitted Signs
The table below outlines the regulations for permanent signs in the City of Sammamish. All permanent signs must be approved through the permitting process. Unless otherwise stated herein, all permanent signs must be on-site. No permanent sign may be placed in the City's right-of-way.

Key

X – Prohibited

N/A – Not Applicable – Sign Type Not Allowed in Zone

| | Residential Zone | Community Business Zone(1)(2) | Neighborhood Business Zone(1)(2) | Office Zone(1)(2) |
|---|---|---|---|---|
| | Freestanding Signs(3) | | | |
| Quantity(4) | X | One per street frontage(5) | | One per street frontage |
| Maximum Sign Area | N/A | 85 sq ft, + 20 sq ft for each additional business in a multiple tenant structure up to 145 sq ft. | 50 sq ft | |
| Combined Sign Area Limit for Lots with Multiple Freestanding Signs(6) | N/A | 250 sq ft | 150 sq ft | 80 sq ft |
| Maximum Height | N/A | 20 feet | 15 feet | |
| | Home Business Signs | | | |
| Maximum Sign Area(7) | 6 sq ft | N/A | | |
| | Permanent Residential Development Identification Signs | | | |

| | Residential Zone | Community Business Zone(1)(2) | Neighborhood Business Zone(1)(2) | Office Zone(1)(2) |
|---|---|---|---|---|
| Quantity | Two one-sided signs or one two-sided sign per major entrance | Two one-sided signs or one two-sided sign per major entrance (8) | | |
| Maximum Sign Area | 32 sq ft per sign | 32 sq ft per sign | | |
| Maximum Sign Height | 6 ft per sign (9) | N/A | | |
| | Projecting or Awning Signs Mounted on the Sloping Portion of Roofs (10) | | | |
| Quantity (11) | X | One Allowed in Lieu of Wall Signs | | |
| Maximum Sign Area | N/A | No greater than 15 percent of building façade | No greater than 10 percent of building façade | |
| Minimum Clearance above Finished Grade (12) | N/A | 8 ft | | |
| Maximum Projection, Perpendicular from Supporting Building Façade | N/A | 6 ft | | |
| | Signs on Property with Public Agency Facilities (13) | | | |
| Quantity | 2 per Facility | X | | |
| Maximum Sign Area | 30 sq ft | N/A | | |
| Maximum Height | 6 ft | N/A | | |
| | Sign on Residentially Zoned Property with Nonresidential Use (14) | | | |
| Quantity | One | X | | |
| Maximum Sign Area | 25 sq ft | N/A | | |
| Maximum Height | 6 ft | N/A | | |
| | Wall Signs | | | |
| Maximum Sign Area (15) | N/A (16) | 15 percent of building façade | 10 percent of building façade | 10 percent of building façade (17) |

Development Conditions

1. Directional signs for surface parking areas or parking structures located in the R-, CB, NB, and O-Zones shall not be included in the sign area or number limitations stated in this table, provided that they shall not exceed six square feet in surface area and are limited to one for each entrance or exit.

2. Fuel price signs shall not be included in sign area or number limitations referenced in this table, provided such signs do not exceed 20 square feet per street frontage.

3. Changing message center signs and time and temperature signs can be wall or freestanding signs, and shall not exceed the size permitted for wall or freestanding signs.

4. Corner lots with a street frontage of less than 100 feet on each street shall be permitted only one freestanding sign.

5. Multiple tenant developments in the CB and NB zone that have more than 300 feet of street frontage on one street may have one additional freestanding sign for each 300 feet of street frontage, or portion thereof. Such signs shall be separated from one another by a minimum of 150 feet, if located on the same street frontage.

6. On lots where more than one freestanding sign is permitted, the sign area permitted for individual freestanding signs may be combined.

7. Home business signs may only be wall signs.

8. Permanent residential identification signs are only allowed in the NB, CB, and O-Zones as part of a mixed-use development.

9. Applicable only to freestanding signs.

10. Any sign attached to the sloping surface of a roof shall be installed or erected in such a manner that there are no visible support structures, shall appear to be part of the building itself, and shall not extend above the roof ridge line of the portion of the roof upon which the sign is attached.

11. Maximum height for awning signs shall not extend above the height of the awning upon which the awning sign is located.

12. Maximum height for projecting signs shall not extend above the highest exterior wall upon which the projecting sign is located.

13. See SMC 21A.15.915 for a list of permitted public agencies.

14. Non-residential uses of residential property as outlined in Chapter 21A.20 SMC.

15. Maximum height for wall signs and changing message center signs shall not extend above the highest exterior wall or structure upon which the sign is located.

16. Wall signs are allowed in Residential zones to identify schools, home businesses, and other non-residential uses, subject to the regulations listed in this table.

17. Only on building facades with street frontage.

(2) Illumination of Permanent Signs

The table below outlines the regulations for illumination of permanent signs in the City of Sammamish. Temporary signs, governed by SMC21A.45.070, shall not be illuminated. All permanent signs, including the requested illumination, must be approved through the permitting process. All electrical components for signs shall be governed by Chapter 19.28 RCW and Chapter 296-46-910 WAC.

Key

P – Permitted, pursuant to Permit issued by City

X – Prohibited

| | R-Zone | CB-Zone | NB-Zone | Office Zone |
|---|---|---|---|---|
| Internal Illumination (1) | X | P | | |
| Indirect Illumination (1)(2) | P | | | |
| Signs with an On/Off Operation | X | P | X | |

Development Conditions

1. The light source for indirectly illuminated signs shall be no farther away from the sign than the height of the sign.

2. Indirectly illuminated signs shall be arranged so that no direct rays of light are projected from such artificial source into residences or any street right-of-way.

**21A.45.070 Temporary signs.**
The following temporary signs or displays are permitted and, except as required by the International Building Code; Chapter 16.20 SMC, Construction Administrative Code; or as otherwise required in this chapter, do not require a sign permit, subject to the requirements set out in this chapter. All temporary signs shall not obstruct sight distances and shall follow the regulations prescribed by Chapter 14.01 SMC, Public Works Standards Adopted, and by SMC 21A.25.220, Sight distance requirements. No temporary signs shall be located within center medians or within roundabouts, traffic circles, or islands. Temporary signs shall not be illuminated.

(1) Non-Commercial Temporary Signs.
No sign permit is required to post a non-commercial temporary sign in the public right-of-way or on private property if it meets the requirements in this section and in the following table. Non-commercial temporary signs not conforming to the regulations of this section may be approved through a right-of-way permit.

a) Non-commercial temporary signs may be placed between the sidewalk and the right-of-way line. On roads that only have a shoulder and do not have a sidewalk, non-commercial temporary signs must be placed a minimum of 3 feet from the edge of the asphalt.
b) Non-commercial temporary signs shall not be placed in the right-of-way within a 150-foot radius of the center of an intersection.
c) The City Engineer, in consultation with the director of public works or their designee, and following review of applicable state and city codes, may approve non-commercial temporary sign placement in the improved portion of the public right-of-way or within a 150-foot radius of the center of an intersection provided that the location and sign characteristics will not present a traffic safety issue.
d) Non-commercial temporary signs shall not be placed in a manner that negatively affects the health of trees, shrubs, or other landscaping.

| | Non-Commercial Temporary Sign Type I – Placed in Public Right-of-Way (Non-A-Frame) | Non-Commercial Temporary Sign Type II – Placed in Public Right-of-Way (A-Frame) | Non-Commercial Temporary Sign Type III – Private Property (All Sign Types) (1) |
|---|---|---|---|
| Size Limit | 4 sq ft | 6 sq ft | 16 sq ft if located less than 50 feet from a street property line; 32 sq ft if located 50 feet or more from a street property line |
| Height Limit | 3 ft above grade | 3.5 ft | 8 ft |
| Duration | 180 consecutive days | 2 consecutive days | 180 consecutive days |

Development Conditions

1. Placement of off-premises non-commercial temporary signs on private property is subject to the landowner's authorization.

(2) Temporary Commercial Displays

Signs, posters, pennants, strings of lights, blinking lights, balloons, and searchlights are permitted for a period of up to 30 consecutive days once each calendar year at businesses located in Sammamish in the CB, NB, or O-Zones.

(3) Signs Located on Property with Active Construction

(a) One non-illuminated, double-faced sign is permitted for each public street upon which the project fronts;
(b) No sign shall exceed 32 square feet in surface area or 10 feet in height, or be located closer than 30 feet from the property line of the adjoining property; and
(c) Signs must be removed by the date of first occupancy of the premises or one year after placement of the sign, whichever occurs first.

(4) Signs Associated with Properties for Sale or Rent

| | Signs Located On Property with Individual Unit for Sale or Rent |
|---|---|
| Sign Quantity | One per public street frontage |
| Permitted Location | Public street frontage |
| Permitted Duration | Signs shall be removed within five days after closing of the sale, lease or rental of the property. |
| Maximum Sign Area | 8 sq ft |
| Maximum Height | 6 ft |
| | Signs Located Off-Site of Property with Individual Unit for Sale or Rent (1) |
| Sign Quantity | One (2) |
| Permitted Location | Public right-of-way adjacent to the intersection of the primary vehicle entrance to the property and closest public street. |
| Permitted Duration | Signs shall be removed within five days after closing of the sale, lease or rental of the property. |
| Maximum Sign Area | 4 sq ft |
| | Portable Off-Premises Residential Directional Signs for Active Open Houses for Sale or Rent (3) |
| Maximum Sign Area | 6 sq ft |
| Maximum Height | 42 inches |
| | Signs on Property with Commercial or Industrial Property for Sale or Rent |
| Sign Quantity | One |
| Permitted Location | Public street frontage |
| Maximum Sign Area | 32 sq ft |
| Maximum Height | 12 ft |
| | Signs on Newly Constructed Residential Developments for Sale |
| Sign Quantity | One |
| Permitted Location | Public street frontage |
| Maximum Sign Area | 32 sq ft |
| Maximum Height | 12 ft |
| | Directional Signs Located Off-site Of Newly Constructed Residential Developments for Sale |
| Sign Quantity | Two |
| Permitted Location | Private property (with permission); public right-of-way |
| Maximum Sign Area | 16 sq ft |

Development Conditions

1. Only allowed for properties with a unit for sale or rent that is not located adjacent to a public street.

2. When more than three off-site real estate signs are proposed for a location, the fourth proposed sign owner shall install and make available to other licensed real estate agents a frame, designed to allow for a minimum of six signs to be hung in a stacked fashion, to accommodate multiple signs; Frames installed to hold multiple real estate signs shall not exceed a height of six feet. Off-site signs located on a frame shall individually not exceed a height of one and a half feet, a width of two feet, and an area of three square feet.

3. Such signs shall be permitted only when the agent or seller is in attendance at the property for sale or rent and may be located on the right-of-way outside of vehicular and bicycle lanes.

**21A.45.080 Legal non-conforming signs**

(1) Any sign located within the city limits on the date of adoption of the ordinance codified in this title, or located in an area annexed to the city thereafter, which does not conform with the provisions of this code, shall be considered a legal nonconforming sign and is permitted, provided it also meets the following requirements:
   a) The sign was covered by a permit on the date of adoption of the ordinance codified in this title if one was required under applicable law; or
   b) If no permit was required under applicable law for the sign in question, the sign was in all respects compliant with applicable law on the date of adoption of the ordinance codified in this title.

(2) Loss of Legal Nonconforming Status.

Nonconforming signs shall not be altered in size, shape, height, location, or structural components without being brought to compliance with the requirements of this code. Repair and maintenance are allowable, but may require a permit if structural components require repair or replacement.

**21A.45.090 Variance**

(1) A sign variance is categorized as a Type 1 land use application and shall be subject to the requirements of SMC 21A.110.030. Variances from the terms of this chapter may be granted by Director of Community Development upon proper application. Variances may be granted when, because of unique circumstances applicable to the property, including size, shape, topography, location, or surroundings, the strict interpretation of the regulations of this chapter deprives such property of privileges enjoyed by other property in the vicinity and under identical zoning classifications.

(2) The variance shall not constitute a grant of special privilege inconsistent with a limitation upon uses of other properties in the vicinity and zone in which such property is situated.

**21A.45.100 – Enforcement**

(1) Compliance with other applicable codes.
All signs erected or altered under this chapter must comply with all applicable federal, state and local regulations relating to signs, including without limitation the provisions of the International Building Code as adopted in SMC 16.05.010 by the city. If any provision of this code is found to be in conflict with any provision of any zoning, building, fire, safety or health ordinance or code of the city, the provision which establishes the higher standard shall prevail.

(2) Sign maintenance.
All permanent and temporary signs must be kept in good repair and in a safe manner at all times. The sign owner must repair damaged or deteriorated signs within 30 days of notification by the City. The area surrounding freestanding signs must be kept free of litter and debris at all times.

(3) Inspection.
Code enforcement officers are authorized to inspect any sign covered by this chapter for the purpose of inspection of the sign, its structural and electrical connections, and to ensure compliance with the provisions of this code. Such inspections shall be carried out during business hours, unless an emergency exists.

(4) Abatement.
In addition to the abatement authority provided by proceedings under SMC 21A.115.030, the City or its agents may summarily remove any sign placed on a right-of-way or public property in violation of the terms of this chapter under the following circumstances:

(a) When a sign is determined by the City Engineer or Director of Community Development to present an immediate threat to the safety, health, and welfare of the public;

(b) When a sign is illegally placed within the public right-of-way, within a landscape median, landscape island, traffic circle, attached to a utility pole or city traffic sign, upon public sidewalks or roadway, or on any public building or structure when such facilities are located on public property or within public right-of-way;

(c) When a sign is determined by the City to be abandoned; provided, that the city must first provide fourteen days' notice to the underlying property owner or business owner that the sign is deemed abandoned;

(d) Disposal of Signs. When a sign has been removed by the City as authorized by this section, the City shall take the following actions:

i. The City shall hold a sign for at least seven days. After seven days the City may dispose of the sign without prior notice to the sign owner. The City shall not be responsible for damage or loss during removal or storage of any signs in violation of this code. Sign owners wishing to reacquire possession of removed signs prior to their disposal shall pay an impoundment fee pursuant to SMC 23.100.010.

ii. For signs with a fair market value exceeding five hundred dollars, the City shall provide notice by mail to the following:

A. Sign Owner. If the mailing address can be determined by the City after reasonable efforts in investigation. "Reasonable efforts" shall include investigation efforts that take no longer than one-half hour of staff time.

B. Underlying Property Owner. If the address of the sign owner cannot be reasonably ascertained, the City shall mail the notice to the underlying real property owner, as identified in the records of the King County Assessor's Office.

**23.100.010 Assessment schedule**

| | |
|---|---|
| Code Enforcement Penalties: | |
| Infraction | up to $500 |
| Stop Work Order | up to $500 |
| Noncompliance: | |
| 1 – 15 days | $100 up to $250 per day |
| 16 – 31 days | $250 up to $500 per day |
| 31+ days | $500 up to $1,000 per day (up to $50,000 maximum) |
| Environmental Damage/Critical Areas Violations: | |
| Up to $25,000 plus the cost of restoration. | |
| Unlawful Tree Removal or Damage: | |
| $1,500 per inch of diameter at breast height of tree removed or damaged. | |
| $25 fee per sign illegally placed on public property or in the City's right-of-way. | |

## Chapter 21B.15

## TECHNICAL TERMS AND LAND USE DEFINITIONS

**[…]**

**21B.15.341 Sign.**
"Sign" means any medium, device, structure, fixture, or placard, including any necessary supporting structure and component parts, that is visible from a public right-of-way or surrounding properties, and uses graphics, symbols, or written copy to convey a message, attract attention to, or advertise a product, place, activity, business, event, good, service, or land use.

**21B.15.341.1 Sign, A-Frame.**
"Sign, A-frame" means a freestanding 2-panel foldable, portable temporary sign made of rigid material.

**21B.15.342 Sign, awning/marquee.**
"Sign, awning/marquee" means a sign painted on or attached directly to and supported by an awning or marquee. An awning may be constructed of rigid or nonrigid materials and may be retractable or nonretractable. A marquee is a roof-like shelter, as of glass, projecting above an outer door and over a

sidewalk or a terrace, which may be attached to a building or be freestanding.

**21B.15.343 Sign, blade.**
"Sign, blade" means a small, pedestrian-oriented building-mounted sign that is attached to and supported by the exterior wall of a building with the exposed face of the sign on a plane perpendicular to the wall of the building, projecting more than one foot from the wall of a building and vertical to the ground.

**Figure 21B.15.343. Blade sign examples.**

**21B.15.344 Sign, box/cabinet.**
"Sign, box/cabinet" means a building-mounted sign that is attached to and supported by the exterior wall of a building with the exposed face of the sign on a plane parallel to the wall of the building and where the sign or individual letters are contained within a box or cabinet and are internally illuminated.

**Figure 21B.15.344. Cabinet sign examples.**

**21B.15.345 Sign, building-mounted.**
"Sign, building-mounted" means a sign that is attached directly to a building or indirectly attached to a building by a support structure. Building-mounted signs may include, but are not limited to, wall, hanging, blade, awning, marquee, opaque, channel, painted, shadow, and window signs.

**21B.15.346 Sign, changing message.**
"Sign, changing message" means a sign that contains electronically controlled digital or illuminated text, or a sign that contains text that can be manually changed.

**Figure 21B.15.347. Changing message sign examples.**

**21B.15.347 Sign, channel letter.**
"Sign, channel letter" means a wall sign that is comprised of lettering that is attached to and supported by the exterior wall of a building or a structure with the exposed face of the lettering or graphics on a plane

parallel to the wall of the building, and where the letters contain an open channel into which neon lighting is inserted.

**Figure 21B.15.348. Channel letter sign examples.**

**21B.15.348 Sign, community banner.**
"Sign, community banner" means a temporary sign, located on City banner poles, which advertises a City-sponsored or hosted event.

**21B.15.349 Sign, directional.**
"Sign, directional" means a sign that is primarily designed to guide or direct pedestrian or vehicular traffic to an area, business, place, or convenience, and may include incidental graphics such as trade names and trademarks.

**Figure 21B.15.349.1. Directional sign examples.**

**21B.15.349.1 Sign, hanging.**
"Sign, hanging" means a small, pedestrian-oriented sign that is hung beneath an awning, canopy, or marquee sign or other structure.

**Figure 21B.15.349.2. Hanging sign examples.**

**21B.15.349.2 Sign, incidental.**
"Sign, incidental" means a sign, emblem or decal designed to inform the public of goods, facilities, or services available on the premises, and may include but not be limited to signs designating:

(a) Restrooms;
(b) Hours of operation;
(c) Acceptable credit cards;
(d) Property ownership or management;
(e) Phone booths; and
(f) Recycling containers.

**21B.15.349.3 Sign, freestanding.**
"Sign, freestanding" means a sign standing directly upon the ground or having one or more supports standing directly upon the ground, and being detached from any building or fence.

**21B.15.349.4 Sign, fuel price.**
"Sign, fuel price" means a sign utilized to advertise the price of gasoline and/or diesel fuel.

**21B.15.349.5 Sign, logo.**
"Sign, logo" means a sign, graphic representation, or symbol of a company name, trademark, or abbreviation, uniquely designed for ready recognition. A logo sign may be a wall sign or a freestanding sign.

**21B.15.349.6 Sign, monument.**
"Sign, monument" means a freestanding sign that is above ground level and is anchored to the ground by a solid base, with no open space between the sign and the ground.

**21B.15.349.7 Sign, opaque.**
"Sign, opaque" means a building-mounted sign that is attached to and supported by the exterior wall of a building or a structure where the surface of the sign is generally comprised of two or more opaque

materials on the same plane. Where internally illuminated, the opaque material that comprises the lettering of the sign may be translucent such that it allows limited light to shine through the sign letters.

**Figure 21B.15.349.8. Opaque sign examples.**

**21B.15.349.8 Sign, painted.**
"Sign, painted" means a sign, mural or graphic design painted directly onto a building facade or onto a flat wood or metal surface that is then attached to the building facade.

**Figure 21B.15.349.9. Painted sign examples.**

**21B.15.349.9 Sign, permanent residential development identification.**
"Sign, permanent residential development identification" means a permanent sign identifying the residential development upon which the sign is located.

**21B.15.349.10 Sign, pedestal.**
"Sign, pedestal" means a temporary, pedestrian-oriented sign placed atop a pedestal that is affixed to a heavy horizontal base.

**Figure 21B.15.349.11. Pedestal sign examples.**

**21B.15.349.11 Sign, primary.**
"Sign, primary" means a painted, opaque, awning, marquee, or channel letter sign that is designed to be the primary source of business identification to both pedestrian and vehicular traffic.

**21B.15.349.12 Sign, secondary.**
"Sign, secondary" means a window, logo, blade, or hanging sign that generally contains secondary, pedestrian-oriented business identification, business product information, or hours of operation.

**21B.15.349.13 Sign, shadow.**
(24) "Sign, shadow" means a wall sign comprised of individual letters or graphics that is attached to and supported by the exterior wall of a building with the exposed face of the sign lettering or graphics on a plane parallel to the wall of the building, where the surface of the sign is generally comprised of a

completely opaque material. The sign lettering or graphics are separated from the building facade such that during daylight hours the lettering generates a shadow on the building facade.

**Figure 21B.15.349.14. Shadow sign examples.**

**21B.15.349.14 Sign, temporary.**
"Sign, temporary" means a sign that is designed to be displayed for a limited amount of time and is not permanently placed or affixed such as to prevent its removal;

**21B.15.349.15 Sign, window.**
"Sign, window" means a sign that is constructed of neon, stained glass, gold leaf, cut vinyl, etched glass, or similar material in a window.

**21B.15.349.16 Sign, wall.**
"Sign, wall" means any sign painted on, or attached directly to and supported by, the wall of a building or structure. All wall signs are building-mounted signs. Wall signs may include, but are not limited to, window, opaque, shadow, painted, channel letter, and logo signs. (Ord. O2010-293 § 1 (Att. A))

## Chapter 21B.45

## SIGNAGE

Sections:

21B.45.010 Purpose and intent.
21B.45.020 Applicability.
21B.45.030 Permit required.
21B.45.040 Application information.
21B.45.050 Prohibited signs.
21B.45.060 Exempt signs.
21B.45.070 Interpretation of tables and design standards.
21B.45.080 Table of allowed sign types and design review.
21B.45.090 Review and modifications to standards.
21B.45.100 Sign area calculation.
21B.45.110 General sign design standards.
21B.45.120 Design standards for specific sign types.
21B.45.130 Design and compatibility review.
21B.45.140 Temporary signs.
21B.45.150 Legal non-conforming signs.
21B.45.160 Variance.
21B.45.170 Enforcement.

**21B.45.010 Purpose and intent.**
The purpose of this chapter is to enhance and protect the economic vitality and visual environment of the Town Center, allow for the expression of free speech, and promote general safety and welfare by:

(1) Regulating the type, number, location, size, and illumination of signs; and

(2) Recognizing the purpose of signs for identification and economic well-being of businesses in the Town Center by supporting a full range of signs necessary for commercial services in the Town Center; and

(3) Ensuring a safe driving environment; and

(4) Recognizing and protecting the use of the public right-of-way as a forum for non-commercial speech; and

(5) Facilitating fair and consistent content-neutral enforcement; and

(6) Safeguarding and enhancing property values, attracting new residents, and encouraging orderly development; and

(7) Allowing for limited temporary commercial signage in the public right of way to provide commercial information to consumers to enable them to make vital decision of purchasing a home, and to further the critical public goal of providing for equal access to housing; and

(8) Upholding the goals and policies of the Sammamish Comprehensive Plan and the Town Center Subarea Plan.
(9) Promoting signs within the Town Center that contribute to the character of the Town Center, are integrated with natural surroundings and landscaping, and exhibit an intimate human scale;

(10) Providing necessary signage to support central gathering places, increase social interaction, and encourage walkability;

(11) Regulating signs in a manner that is timely, flexible, predictable, fair to all and that results in superior development; and

(12) Creating a vibrant and inviting commercial node that is reflected in the character and design of Town Center signage. (Ord. O2010-293 § 1 (Att. A))

**21B.45.020 Applicability.**
Except as provided for in SMC 21B.45.060, Exempt signs, all signs shall be subject to the design provisions of this chapter; provided, that specific sign standards and design requirements may be further established through a unified zone development plan and shall be established through the unified zone development plan approval, pursuant to . (Ord. O2010-293 § 1 (Att. A))

**21B.45.030 Permit required.**
(1) Except as otherwise provided in by this chapter, no sign shall be erected, altered, or relocated within the Town Center without a permit issued by the City.

(2) No permit shall be required for repainting in like colors, cleaning, or other normal maintenance and repair of a permitted sign, or of sign face and copy changes that do not alter the size or structure of the sign or compliance with the design standards. (Ord. O2010-293 § 1 (Att. A))

**21B.45.040 Application information.**
The applicant shall have the burden of demonstrating that a proposed sign(s) complies with this chapter as follows:

(1) All new signs requiring a permit or approval pursuant to SMC 21B.45.030 shall provide, in a form established by the City, at a minimum an accurate plan with complete dimensions, location, size, color, shape, materials, type of illumination, size and style of lettering, copy design and the proposed manner of installation. Additional information may be required as reasonably necessary for approval by the director.

(2) The size and location of every existing sign on the premises shall be noted.

(3) If a unified zone development plan was previously approved by the City and included sign approvals, an applicant whose sign conforms to that plan may refer to it in the application and may omit detailed drawings unless specifically requested to provide them.

(4) If design and compatibility review is required pursuant to SMC 21B.45.080, the applicant shall submit a compatibility analysis addressing the design criteria enumerated in SMC 21B.45.130, Design and compatibility review. (Ord. O2010-293 § 1 (Att. A))

**21B.45.050 Prohibited signs.**
Except as indicated by this chapter, the following signs or displays are prohibited:

(1) Any sign that is otherwise allowed, but does not comply with the provisions of this chapter;

(2) Signs attached to a fence;

(3) Signs which, by reason of their size, location, movement, content, coloring, or manner of illumination, may be confused with traffic control signs or signals;

(4) Temporary signs except as specifically allowed in SMC 21B.45.140;

(5) Except as specifically allowed, signs located in the public right-of-way, or within travel lanes or sidewalks, or attached to traffic control signs, utility or signal poles;

(6) Changing message center signs or signs containing moving graphics, text, or video, or that are flashing, moving, rotating, animated, or inflated;

(7) A sign that extends higher than the peak of the roof, ridge line, or parapet of a building to which it is attached;

(8) Visible ballast boxes or other sign equipment;

(9) Posters, pennants, strings of lights, moving/flashing/blinking lights, balloons, searchlights, exposed electrical conduits, and other displays of a carnival nature, except on a limited basis as provided for in SMC 21B.45.140 as temporary business displays;

(10) Box or cabinet signs;

(11) Pole-mounted freestanding signs;

(12) Roof-mounted signs; and

(13) Billboards. (Ord. O2010-293 § 1 (Att. A))

**21B.45.060 Exempt signs.**
The following signs or displays are exempted from the regulations under this chapter:

(1) Historic plaques not exceeding 3 square feet in area, and address numbers;

(2) Official or legal notices issued and posted by any public agency or court;

(3) Traffic control signs established by the Manual on Uniform Traffic Control Devices (MUTCD) or authorized by City of Sammamish Department of Public Works;

(3) Plaques, tablets, or, which are attached flat to the face of the building, which are nonilluminated, and which do not exceed four square feet in surface area;

(4) Incidental signs, which shall not exceed two square feet in surface area; provided, that said size limitation shall not apply to signs providing directions, warnings, or information when established and maintained by a public agency;

(5) Government flags; and

(6) Nonverbal religious symbols attached to a place of worship.

(Ord. O2010-293 § 1 (Att. A))

**21B.45.070 Interpretation of tables and design standards.**
(1) SMC 21B.45.080 determines whether a specific sign type is allowed in a zone district. The zone district and the public right-of-way are identified in the vertical column and the specific sign type is located on the horizontal row of these tables.

(2) If no symbol appears in the box at the intersection of the column and the row, the sign type is not allowed in that district, except for certain signs allowed pursuant to SMC 21B.45.140, Temporary signs.

(3) The review of all sign permit applications is administrative, and shall be conducted by the director of community development, subject to the review requirements identified below.

(4) If the number “1” appears in the box at the intersection of the column and the row, the sign type is allowed in that district subject to the sign design standards specified in SMC 21B.45.110, 21B.45.120, and the general requirements of the code.

(5) If the number “2” appears in the box at the intersection of the column and the row, the sign type is allowed subject to the sign design standards, general requirements, and the Design and compatibility review specified in SMC 21B.45.130. (Ord. O2010-293 § 1 (Att. A))

**21B.45.080 Table of allowed sign types and design review.**
(1) Table of Allowed Sign Types and Design Review for Town Center Zones.

| | TOWN CENTER ZONES | | | | | |
|---|---|---|---|---|---|---|
| **Sign Types** | **ROW** | **TC-A** | **TC-B** | **TC-C** | **TC-D** | **TC-E** |
| Building-Mounted Signs: | | | | | | |
| Blade | 2(1) | 1 | 2 | 2 | 2 | 2 |
| Opaque/Painted | | 2 | 2 | 2 | 2 | 2 |
| Channel Letter/Shadow | | 2 | 2 | | | |
| Hanging | | 1 | 2 | | | |
| Marquee/Awning | | 2 | 2 | | | |
| Window | | 1 | 2 | | | |
| Freestanding Signs: | | | | | | |
| Community Banner | 1 | | | | | |
| Directional (Pedestrian) | 2 | 1 | 1 | 1 | 1 | 1 |
| Directional (Vehicle) | 2 | 1 | 1 | 1 | 1 | 1 |
| Monument | | 2(2) | 2 | 2 | 2 | 2 |
| Changing Message Center | | | | | 2 | |

Development Conditions

(1) Only allowed as part of a unified zone development plan application approved pursuant to Chapter 21B.95 SMC; and provided, that no sign shall extend into the vehicle travel lanes.

(2) Only allowed in the TC-A-4 and in the TC-A-5 zones. (Ord. O2010-293 § 1 (Att. A))

**21B.45.090 Review and modifications to standards.**
(1) All sign permits shall be approved administratively, subject to the permit review requirements of Chapter 20.05 SMC; provided, that:

(a) Signs subject to the Level 1 sign review shall be reviewed for compliance with this chapter but shall not be subject to the provisions of SMC 21B.45.130, Design and compatibility review;

(b) Signs subject to the Level 2 Design and Compatibility Review requirements shall be reviewed for compliance with this chapter, including the provisions of SMC 21B.45.130, Design and compatibility review;

(2) Sign design may be reviewed and approved as part of a unified zone development plan review consistent with Chapter 21B.95 SMC, provided:

(a) Specific sign designs approved as part of a unified zone development plan will require a sign permit, but will not require additional design review at the time of permit application when in accordance with the approved unified zone development plan; or

(b) Additional design standards and guidelines may be adopted through the review process, subject to specific design review of signs at the time of building permit application. Additional design standards and guidelines adopted through the review process shall govern all subsequent sign design reviews including replacement signs.

(3) The director may approve applicant-proposed modifications of up to 25 percent of the sign area, height, width, and other dimensional standards as part of the Level 2 Design and Compatibility Review process, pursuant to SMC 21B.45.130; provided, that any such approval shall be based upon an overall sign concept that is integrated with the building and is consistent with the goals of SMC 21B.45.130, Design and Compatibility Review. Applicant-proposed modifications to the number of signs allowed, illumination standards, the types of signs allowed, or sign modifications that would result in a sign that is not designed consistent with this purpose of this chapter shall not be considered; and

(4) Applicants proposing a sign that is subject to the Level 1 basic sign review may choose to request a Level 2 Design and Compatibility Review in order to take advantage of the director's ability to modify sign standards, pursuant to SMC 21B.45.090(3). (Ord. O2010-293 § 1 (Att. A))

**21B.45.100 Sign area calculation.**

(1) Sign area shall be calculated as follows:
- (a) Sign area for nonmonument freestanding signs shall be calculated by determining the total surface area of the sign as viewed from any single vantage point, excluding support structures.
- (b) Sign area for pole signs shall be calculated by determining the total surface area of the sign as viewed from any single vantage point, excluding support structures.
- (c) Sign area for letters or symbols painted or mounted directly on walls or monument signs or on the sloping portion of a roof shall be calculated by measuring the smallest single rectangle that will enclose the combined letters and symbols.
- (d) Sign area for signs contained entirely within a cabinet and mounted on a wall, roof, or monument shall be calculated by measuring the entire area of the cabinet.

(2) maximum sign height.

(a) For a freestanding sign, the vertical distance measured from the surface of the ground to the highest point of the sign or sign structure; and

(b) For a building-mounted sign, the vertical distance measured from the building grade to the highest point of the sign or structure designed to support a sign.

(3) Sign clearance is measured from the surface of the ground to the lowest portion of the sign structure.

(4) Area of building façade is calculated by multiplying the width of the building, or tenant space associated with the commercial use, by the height of the building or tenant space.

(5) The lineal feet of building façade is calculated by measuring the width of the building or tenant space associated with the commercial use. Building modulation(s) are not included in the lineal feet of building façade. (Ord. O2010-293 § 1 (Att. A))

**21B.45.110 General sign design standards.**

(1) General Requirements.

(a) All signs shall be constructed primarily of nonreflective materials;

(b) Building-mounted sign frames and other support structures shall be concealed or integrated into the building's architectural character in terms of form, color, and materials such that they are not easily visible;

(c) Building-mounted signs must be in proportion to the size and design of the architectural features of the building façade;

(d) All signs, except directional signs and community banners, shall be on-premises signs;

(e) Maximum height for building-mounted signs shall not extend above the highest exterior wall upon which the sign is located; provided, that blade signs shall not exceed the roofline of the building along the façade that the blade sign is attached to;

(f) Total sign area for primary and secondary wall signs associated with uses occupying the ground level of a building shall not exceed 10 percent of the ground-level building façade associated with the sign; provided that there is a minimum allowed sign area of 10 square feet and a maximum allowed sign area of 320 square feet;

(g) Total sign area for primary and secondary wall signs associated with uses that do not occupy the ground level of a building (e.g., the use is on the second or third story) shall not exceed five percent of the building façade associated with the use;

(h) Tenants are allowed one primary sign regulated by this chapter per building façade that contains a public entry (open during all business hours), up to a maximum of two façades;

(i) Tenants are allowed three secondary signs regulated by this chapter per building façade that contains a public entry (open during all business hours);

(j) Wall sign width shall not exceed a width of two-thirds of the lineal width of the building façade associated with the sign;

(k) Signs shall not cover windows, building trim, or architectural ornamentation.

(2) Illumination. Signs may be illuminated as follows:

(a) Illumination shall be limited to indirect lighting unless otherwise specifically allowed by the specific sign type design standards; provided, that no sign may be both internally and indirectly illuminated;

(b) Indirect sign illumination shall be no further away from the sign than the height of the sign;

(c) Externally illuminated signs shall be arranged so that no direct rays of light are projected from such artificial source into residences or any street right-of-way;

(d) External sign light fixtures shall complement the design of the sign and building façades or structures associated with the sign;

(e) External sign lighting shall be “full cutoff” and shall not result in direct illumination of the sky and adjacent properties and structures, and shall be designed to minimize reflected glare to adjacent properties and structures;

(f) Sign illumination shall automatically turn off within one hour of the close of the business, use, or activity; and

(g) Additional illumination standards may be contained in SMC 21B.45.120, Design standards for specific sign types, or adopted through the approval of a unified zone application pursuant to Chapter 21B.95 SMC.

(3) Location. All signs shall be located as follows:

(a) Building-Mounted Signs.

(i) Shall be attached to the building façade of the business or commercial enterprise they are advertising;

(ii) Shall be located on the same floor as the business or commercial enterprise they are advertising; provided, that businesses that occupy more than one floor shall place the sign on the lowest floor occupied by the business;

(iii) Shall not exceed a height of 15 feet above grade if associated with a business located on the bottom floor of a building;

(iv) Shall not conflict with the ability to view any other sign associated with the building to which the sign is attached;

(v) Shall not conflict with vehicle travel lanes if blade or hanging signs extend into the street right-of-way as otherwise allowed by the City; and

(vi) May extend over the sidewalk if they are hanging or blade signs otherwise approved by the City.

(b) Freestanding Signs.

(i) May be located on private property with the consent of the private property owner, unless otherwise allowed in this chapter;

(ii) May be located in the public right-of-way pursuant to SMC21B.45.080(1) and with the written approval by the City of Sammamish;

(iii) Located on private property shall be no further than five feet from the street; and

(iv) Shall not obstruct sight distances as prescribed by Chapter 14.01 SMC, Public Works Standards Adopted, or by SMC 21B.25.200, Sight distance requirements.

(4) Sign Standards along 228th Avenue SE.

(a) The only signs visible from 228th Avenue SE shall be either monument signs no taller than six feet above grade or wall signs less than 30 square feet or 18 inches multiplied by the length of the front façade measured parallel to 228th Avenue SE (whichever is smaller);

(b) Except for wall signs on pedestrian-oriented façades built up to the sidewalk, all signs visible from 228th Avenue SE are limited to signs that advertise a commercial node or group of businesses rather than a single business; and

(c) For other design standards, see Chapter 21B.30 SMC. (Ord. O2010-293 § 1 (Att. A))

**21B.45.120 Design standards for specific sign types.**
(1) Blade and Hanging Signs. Blade signs may be allowed pursuant to SMC 21B.45.080(1); provided, that blade signs:

(a) Shall provide a minimum clearance of eight feet;

(b) With horizontally oriented text or graphics shall not project or be located more than five feet from the building façade;

(c) With vertically oriented text or graphics shall not project more than three feet from the building façade;

(d) Shall be limited to two square feet of sign area per each 10 lineal feet of applicable building frontage;

(e) Buildings that contain multiple tenants shall use a similar shape and mounting technique to hanging or blade signs;

(f) Sign text and graphics may use neon lettering, subject to provisions of SMC 21B.45.110(2); and further provided, that neon signs shall not be visible from 228th Avenue; and

(g) May be opaque signs containing internal illumination consistent with SMC 21B.45.110;

(2) Channel Letter, Opaque, Painted, and Shadow Signs. Channel letter, opaque, painted, and shadow signs may be allowed pursuant to SMC 21B.45.080(1); provided, that:

(a) Channel letter, opaque, painted, or shadow signs that are also wall signs shall be attached directly to the building façade, such that there is a maximum protrusion of one foot unless the sign incorporates sculptural elements or architectural devices. The sign frame shall be concealed or integrated into the building's architectural character in terms of form, color, and materials;

(b) Channel letter and shadow signs shall only be wall signs. Opaque and painted signs may be wall signs, hanging, or blade signs;

(c) Lettering on opaque signs may be internally illuminated where the light only shines through the letters;

(d) Buildings that contain multiple tenants shall use a consistent sign design in terms of lettering, size, color, and style;

(e) Shadow signs may be illuminated by reflected lighting against the building façade located behind the sign letters or graphics;

(f) Channel letter signs shall be open, such that internal neon lighting is visible;

(g) Painted signs may be illuminated by indirect fully cutoff lighting;

(h) Wall sign lettering and graphics shall not exceed a maximum height of two feet;

(3) Marquee/Awning Signs. Marquee/awning signs may be allowed pursuant to SMC 21B.45.080(1); provided, that:

(a) The sign shall provide a minimum clearance of eight feet;

(b) The face of the sign (lettering and graphics) on a marquee or awning shall be on a parallel plane to the building façade;

(c) The awning or marquee supporting the sign shall extend at least three feet from the face of the building, shall be located over a pedestrian walkway or sidewalk, and shall be designed to provide protection from the weather, in addition to supporting the sign;

(d) Sign may be comprised of channel lettering, opaque, or shadow signs;

(e) Sign lettering and graphics shall not exceed two feet in height;

(f) Sign width shall be limited to no more than two-thirds of the width of the awning; and

(g) Marquee signs may be placed on the front, above, or below the marquee associated with the sign;

(h) Marquee and awning signs may be externally illuminated, pursuant to SMC 21B.45.110(2);

(4) Window Signs. Window signs may be allowed pursuant to SMC 21B.45.080(1); provided, that:

(a) Permanent and temporary window signs are limited to a maximum of 25 percent of the window area in addition to the size limitations of SMC 21B.45.110(1);

(b) Signs shall be constructed of neon, stained glass, gold leaf, cut vinyl, or etched glass;

(c) Signs shall not be illuminated, except that a single internally lit neon or stained glass window sign is allowed;

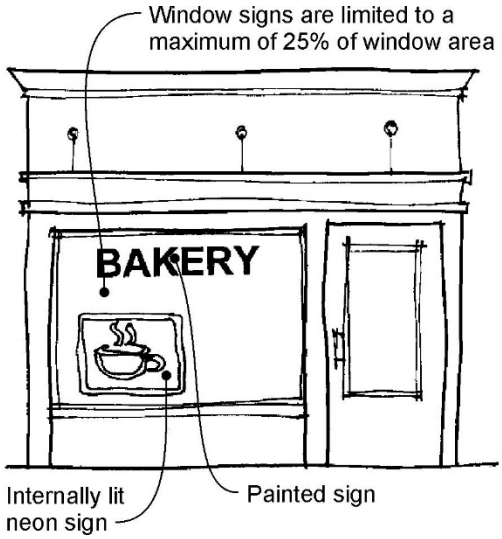


**Figure 21B.45.120f. Window sign example.**

(5) Monument Signs. Monument signs may be allowed pursuant to SMC 21B.45.080(1); and provided, that:

(a) One monument sign is allowed per commercial, institutional, or mixed-use building subject to the following:

(i) The sign may be up to six feet tall;

(ii) Monument signs for individual businesses should include the street address number with six-inch minimum lettering that is clearly readable from the street;

(iii) Lettering style, form, size, dimension, and color shall be consistent on signs identifying multiple tenants;

(b) One monument sign is allowed associated with a single-family subdivision or multifamily residential development, provided the sign shall not exceed a height of 48 inches;

(c) Monument signs may only be indirectly illuminated;

(d) Monument signs shall be designed incorporating natural materials (e.g., granite or basalt stone facing, wood, landscaping), muted colors, and design styles characteristic to the Northwest;

(e) The total sign area contained within a monument sign shall not exceed 48 square feet;

(6) Directional Signs. Directional signs may be allowed pursuant to SMC 21B.45.080(1); provided, that:

(a) Pedestrian-Oriented Directional signs.

(i) Signs shall be located within 10 feet of the intersection of two or more pedestrian sidewalks or paths;

(ii) Signs shall not exceed a height of eight feet;

(iii) Sign lettering and graphics shall not exceed a height of six inches;

(b) Vehicle-Oriented Directional signs.

(i) Signs shall be located within 20 feet of one of the following intersections:

(A) SE 4th Street and 228th Avenue SE;

(B) SE 8th and 228th Avenue SE; and

(C) As otherwise identified through a unified zone development plan application.

(ii) Signs shall not exceed a height of eight feet;

(iii) Sign lettering and graphics shall not exceed a height of 10 inches; and

(iv) All signs located on a street corner or driveway shall conform with Chapter 14.01 SMC, Public Works Standards Adopted, and SMC 21B.25.200, Sight distance requirements. (Ord. O2010-293 § 1 (Att. A))

**21B.45.130 Design and Compatibility Review.**
(1) The goal of the Level 2 Design and Compatibility Review is:

(a) To encourage interesting, creative, and unique sign design that is consistent with the character of the Town Center;

(b) To encourage signs that are timeless, create an intimate pedestrian environment, and incorporate natural materials (e.g., granite or basalt stone, wood, landscaping) or colors (muted earthen tones) associated with the Northwest; and

(c) To ensure that signs are part of, and consistent with, the overall design approach of a project.

(2) The following criteria are the parameters that will be used for reviewing signs for compatibility and design to achieve the goals listed above and the purpose of this chapter; these criteria are in addition to the sign design standards contained within SMC 21B.45.110 and 21B.45.120:

(a) Architectural Compatibility. The signs shall be compatible in size, proportion, shape, character, and quality of design with the exterior architecture of the premises and other structures in the immediate area.

(b) Simplicity. To the extent feasible, the sign should be graphic and with limited use of words, with the design emphasis on simplicity of style. A simple design or abstract graphic design is preferred. Similarly, a simple sign frame and supporting structure is preferred.

(c) Target Audience. Only one sign per building façade should be designed for vehicle and pedestrian use. Signs that are targeted primarily to serve pedestrians are generally preferred over signs targeted for both pedestrian and vehicle audiences.

(d) Identification. A commercial sign should be designed for the primary purpose of identifying a business or office.

(e) Fewer Signs. In the use of the total sign allowance at a particular premises, the use of a minimum number of signs is preferred to the use of many signs, so that a cluttered effect is avoided.

(f) Shape, Size, and Orientation. The shape of a sign should not conflict with the architectural lines of its setting. Signs should be directed toward the passing motorist or pedestrian. No sign should be designed to be readable or to attract motorists from a great distance.

(g) Illumination and Colors. A sign must not overpower its surroundings through hue, saturation, or brilliance or close combination of incompatible colors. Sources of illuminations shall be screened from public view and shall be designed to avoid glare onto a street or adjacent property.

(h) Landscaping. Signs shall be placed with consideration for existing and future growth of trees and other landscaping. A monument sign reviewed under this section must be placed in a landscaped area or planter, with landscaping maintained.

(i) Compatibility with Adjacent Uses. The design, illumination, and location of a sign shall not impair the visibility or the design quality of existing, conforming signs, adjacent buildings, or adjacent uses.

(Ord. O2010-293 § 1 (Att. A))

**21B.45.140 Temporary signs.**
The following temporary signs or displays are permitted and, except as required by the International Building Code; Chapter 16.20 SMC, Construction Administrative Code; or as otherwise required in this chapter, do not require a sign permit, subject to the requirements set out in this chapter. All temporary signs shall not obstruct sight distances and shall follow the regulations prescribed by Chapter 14.01 SMC, Public Works Standards Adopted, and by SMC 21A.25.220, Sight distance requirements. No temporary signs shall be located within center medians or within roundabouts, traffic circles, or islands. Temporary signs shall not be illuminated.

(1) Non-Commercial Temporary Signs.
No sign permit is required to post a non-commercial temporary sign in the public right-of-way or on private property if it meets the requirements in this section and in the following table. Non-commercial temporary signs not conforming to the regulations of this section may be approved through a right-of-way permit

a) Non-commercial temporary signs may be placed between the sidewalk and the right-of-way line. On roads that only have a shoulder and do not have a sidewalk, non-commercial temporary signs must be placed a minimum of 3 feet from the edge of the asphalt.
b) Non-commercial temporary signs shall not be placed in the right-of-way within a 150-foot radius of the center of an intersection.
c) The City Engineer, in consultation with the director of public works or their designee, and following review of applicable state and city codes, may approve non-commercial temporary sign placement in the improved portion of the public right-of-way or within a 150-foot radius of the center of an intersection provided that the location and sign characteristics will not present a traffic safety issue.

d) Non-commercial temporary signs shall not be placed in a manner that negatively affects the health of trees, shrubs, or other landscaping.

| | Non-Commercial Temporary Sign Type I Public Right-of-Way (Non-A-Frame) | Non-Commercial Temporary Sign Type II Public Right-of-Way (A-Frame) | Non-Commercial Temporary Sign Type III – Private Property (All Sign Types)(1) |
|---|---|---|---|
| Size Limit | 4 sq ft | 6 sq ft | 16 sq ft if located less than 50 feet from a street property line; 32 sq ft if located 50 feet or more from a street property line |
| Height Limit | 3 ft above grade | 3.5 ft | 8 ft |
| Duration | 180 consecutive days | 2 consecutive days | 180 consecutive days |

Development Conditions

(1) Placement of off-premises temporary signs on private property is subject to the landowner's authorization.

(2) Commercial Temporary Signs.

(a) Temporary Commercial Displays.

On-premises signs, posters, pennants, strings of lights, blinking lights, balloons, and searchlights are permitted for a period of up to 30 consecutive days once each calendar year for businesses located in Sammamish Town Center.

(b) Signs located on property with active construction.

1.One non-illuminated, double-faced sign is permitted for each public street upon which the project fronts;

2.No sign shall exceed 32 square feet in surface area or 10 feet in height, or be located closer than 30 feet from the property line of the adjoining property; and

3. Signs must be removed by the date of first occupancy of the premises or one year after placement of the sign, whichever occurs first;

(3) Signs Associated with Properties for Sale or Rent.

| | Signs Located On Property with Individual Unit for Sale or Rent |
|---|---|
| Sign Quantity | One (1) per public street frontage |
| Permitted Location | Public street frontage |
| Permitted Duration | Signs shall be removed within five days after closing of the sale, lease or rental of the property. |
| Maximum Size Area | 8 sq ft |

| | |
|---|---|
| Maximum Height | 6 ft |
| | Signs Located Off-Site of Property with Individual Unit for Sale or Rent[1] |
| Sign Quantity | One (1)[2] |
| Permitted Location | Public right-of-way adjacent to the intersection of the primary vehicle entrance to the property and closest public street. |
| Permitted Duration | Signs shall be removed within five days after closing of the sale, lease or rental of the property. |
| Maximum Size Area | 4 sq ft |
| | Signs on Property with Commercial or Industrial Property For Sale or Rent |
| Sign Quantity | One (1) |
| Permitted Location | Public street frontage |
| Maximum Size Area | 32 sq ft |
| Maximum Height | 12 ft |
| | Signs on Newly Constructed Residential Developments for Sale |
| Sign Quantity | One (1) |
| Permitted Location | Public street frontage |
| Maximum Size Area | 32 sq ft |
| Maximum Height | 12 ft |
| | Directional Signs Located Off-site Of Newly Constructed Residential Developments for sale |
| Sign Quantity | Two (2) |
| Permitted Location | Private property (with permission); public right-of-way |
| Maximum Sign Area | 16 sq ft |

Development Conditions

(1) Only allowed for properties with a unit for sale or rent that is not located adjacent to a public street.

(2) When more than three off-site real estate signs are proposed for a location, the fourth proposed sign owner shall install and make available to other licensed real estate agents a frame, designed to allow for a minimum of six signs to be hung in a stacked fashion, to accommodate multiple signs; Frames installed to hold multiple real estate signs shall not exceed a height of six feet. Off-site signs located on a frame shall individually not exceed a height of one and a half feet, a width of two feet, and an area of three square feet.

(4) Community Banner Signs.

(a) Community banner signs shall only be located on public banner poles erected by the City for that use;
(b) Letter on such signs shall not be less than 12 inches in height except for lettering associated with sponsor logos;
(c) Community banner signs shall not be illuminated or have any attention-getting lights; and
(d) Only City-sponsored events may be advertised using the Community Banner program

(5) Pedestal Signs. Temporary pedestal signs are allowed in the TC-A and TC-B zones, subject to the following provisions:

(a) The sign shall be placed such that there is a minimum of a six-foot-wide pedestrian access around the sign;

(b) The sign shall not exceed a height of six feet;

(c) The sign face shall not exceed an area of three square feet;

(d) Sign lettering and graphics shall not exceed a height of four inches;

(e) The frames and other support structures shall be consistent with the building's architectural character in terms of form, color, and materials such that there is a consistent design theme.

(Ord. O2010-293 § 1 (Att. A))

**21B.45.150 Legal non-conforming signs.**
(1) Any sign located within the city limits on the date of adoption of the ordinance codified in this title, or located in an area annexed to the city thereafter, which does not conform with the provisions of this code, shall be considered a legal nonconforming sign and is permitted, provided it also meets the following requirements:

(a) The sign was covered by a permit on the date of adoption of the ordinance codified in this title if one was required under applicable law; or

(b) If no permit was required under applicable law for the sign in question, the sign was in all respects compliant with applicable law on the date of adoption of the ordinance codified in this title.

(2) Loss of legal nonconforming status. Nonconforming signs shall not be altered in size, shape, height, location, or structural components without being brought to compliance with the requirements of this code. Repair and maintenance are allowable, but may require a permit if structural components require repair or replacement. (Ord. O2010-293 § 1 (Att. A))

**21B.45.160 Variance.**
(1) A sign variance is categorized as a Type 1 land use application and shall be subject to the requirements of SMC 21A.110.030. Variances from the terms of this chapter may be granted by director of community development upon complete application. Variances may be granted when, because of unique circumstances applicable to the property, including size, shape, topography, location, or surroundings, the strict interpretation of the regulations of this chapter deprives such

property of privileges enjoyed by other property in the vicinity and under identical zoning classifications.

(2) The variance shall not constitute a grant of special privilege inconsistent with a limitation upon uses of other properties in the vicinity and zone in which such property is situated.

**21B.45.170 Enforcement.**

(1) Compliance with other applicable codes. All signs erected or altered under this chapter must comply with all applicable federal, state and local regulations relating to signs, including without limitation the provisions of the International Building Code as adopted in SMC 16.05.010 by the city. If any provision of this code is found to be in conflict with any provision of any zoning, building, fire, safety or health ordinance or code of the city, the provision which establishes the higher standard shall prevail.

(2) Sign maintenance. All permanent and temporary signs must be kept in good repair and in a safe manner at all times. The sign owner must repair damaged or deteriorated signs within 30 days of notification by the city. The area surrounding freestanding signs must be kept free of litter and debris at all times.

(3) Inspection. Code enforcement officers are authorized to inspect any sign covered by this chapter for the purpose of inspection of the sign, its structural and electrical connections, and to ensure compliance with the provisions of this code. Such inspections shall be carried out during business hours, unless an emergency exists.

(4) Abatement. In addition to the abatement authority provided by proceedings under SMC 21A.115.030, the city or its agents may summarily remove any sign placed on a right-of-way or public property in violation of the terms of this chapter under the following circumstances:

(a) When a sign is determined by the city engineer or director of community development to present an immediate threat to the safety, health, and welfare of the public;

(b) When a sign is illegally placed within the public right-of-way, within a landscape median, landscape island, traffic circle, attached to a utility pole or city traffic sign, upon public sidewalks or roadway, or on any public building or structure when such facilities are located on public property or within public right-of-way;

(c) When a sign is determined by the city to be abandoned; provided, that the city must first provide fourteen days' notice to the underlying property owner or business owner that the sign is deemed abandoned;

(d) Disposal of signs. When a sign has been removed by the city as authorized by this section, the city shall take the following actions:

(i) The city shall hold a sign for at least seven days. After seven days the city may dispose of the sign without prior notice to the sign owner. The city shall not be responsible for damage or loss during removal or storage of any signs in violation of this code. Sign owners wishing to reacquire possession of removed signs prior to their disposal shall pay an impoundment fee pursuant to SMC 23.100.010.

(ii) For signs with a fair market value exceeding five hundred dollars, the city shall provide notice by mail to the following:

(A) Sign owner. If the mailing address can be determined by the city after reasonable efforts in investigation. "Reasonable efforts" shall include investigation efforts that take no

longer than one-half hour of staff time.

(B) Underlying property owner. If the address of the sign owner cannot be reasonably ascertained, the city shall mail the notice to the underlying real property owner, as identified in the records of the King County Assessor's Office.

Exhibit 2

| # | Section | Original | Amended | Rationale |
|---|---|---|---|---|
| 1 | Amended: 21A.15.469.1 - Flag | None | "Flag" means a fabric sheet of square, rectangular or triangular shape which is mounted on a pole, cable or rope at one (1) end. | Definition added per Planning Commission direction. |
| 2 | Amended: 21A.15.469.2 - Flag, government | None | "Flag, government" means any flag or badge or insignia of the United States, State of Washington, King County, City of Sammamish, or official historic plaque of any governmental jurisdiction or agency. | Definition added per Planning Commission direction. |
| 3 | Original and Amended: 21A.15.1085 – Sign | "Sign" means any device, structure, fixture, or placard that is visible from a public right-of-way or surrounding properties and uses graphics, symbols, or written copy for the purpose of advertising or identifying any establishment, product, goods, or service. | "Sign" means any medium, device, structure, fixture, or placard, including any necessary supporting structure and component parts, that is visible from a public right-of-way or surrounding properties, and uses graphics, symbols, or written copy to convey a message, attract attention to, or advertise a product, place, activity, business, event, good, service, or land use. | Replaced with definition from Chapter 21B.15 SMC for consistency. |
| 4 | Original: 21A.15.1096 - Sign, community banner | "Sign, community banner" means a temporary sign, located on City banner poles, which advertises an event that would provide civic, cultural, educational, philanthropic, or service opportunities hosted or promoted by the City or a community group that is not-for-profit or nonprofit and nonpolitical with an IRS designation of Section 501(c) or (d). | Removed. Community Banner is located in Town Center, so definition has been moved to 21B.15. | Community banner regulations moved to Town Center code. See #37, #41, and #42. |
| 5 | Amended: 21A.15.1097 - Sign, commercial | None. | "Sign, Commercial" means a sign erected for a business transaction or advertising the exchange of goods and services. | Definition added per Planning Commission direction. |
| 6 | Original: 21A.15.1100 - Sign, community bulletin board | "Sign, community bulletin board" means a permanent sign which may contain either electronic or permanent graphics, symbols, or words that is used to notify the public of community events and public services, and which contains no commercial advertising. | Removed; sign type was not created. | Removed, as such signs do not exist as initially conceived. See #23. |
| 7 | Original and Amended: 21A.15.1105 – Sign, directional | "Sign, directional" means a sign designed to guide or direct pedestrian or vehicular traffic to an area, place or convenience, and may include incidental graphics such as trade names and trademarks. | "Sign, directional" means a sign that is primarily designed to guide or direct pedestrian or vehicular traffic to an area, business, place, or convenience, and may include incidental graphics such as trade names and trademarks. | Replaced with definition from Chapter 21B.15 SMC for consistency. |

| # | Section | Original | Amended | Rationale |
|---|---|---|---|---|
| 8 | Original: 21A.15.1117 – Sign, fundraising | "Sign, fundraising" is a sign that is erected by a nonprofit organization for the purposes of raising money to support a cause or purpose promoted by the nonprofit or not-for-profit organization. | Removed. | Fundraising sign is an unconstitutional content-based definition. See #27 and #38. |
| 9 | Amended: 21A.15.1131 - Sign, non-commercial | None. | "Sign, non-commercial" means any sign that is not a commercial sign. This definition also includes signs regarding fund raising or membership drive activities for noncommercial or nonprofit entities or groups. | Definition added per Planning Commission direction. |
| 10 | Amended: 21A.15.1144 - Sign, Permanent | None. | "Sign, permanent" means any sign which is intended to be lasting and is constructed from an enduring material such as masonry and metal which remains unchanged in position, character, and condition (beyond normal wear), and is permanently affixed to the ground, wall or building, provided the sign is listed as a permanent sign in the ordinance. | Definition added per Planning Commission direction. |
| 11 | Amended: 21A.15.1146 - Sign, pole | None. | "Sign, pole" means a freestanding sign having one or more supports standing directly upon the ground, and being detached from any building or fence. | Definition added per Planning Commission direction. |
| 12 | Original: 21A.15.1148 Sign, political | "Political sign" means a sign advertising a candidate or candidates for public elective office, or a political party, or signs urging a particular vote on a public issue decided by ballot | Removed. | Political sign is an unconstitutional content-based definition; see #27 and #30 . |
| 13 | Amended: 21A.15.1159 – Sign, temporary | None. | "Sign, temporary" means any sign, banner, pennant, or valance constructed of cloth, canvas, light fabric, cardboard, wallboard or other like materials not permanently attached to the ground, wall or building, intended to be displayed for a short period of time only. | Definition from Chapter 21B.15 SMC included. |
| 14 | Original and Amended: 21A.15.1165 – Sign, wall | "Sign, wall" means any sign painted on, or attached directly to and supported by, a building or structure, with the exposed face of the sign on a plane parallel to the portion of the building or structure to which it is attached, projecting no more than one foot from the building or structure, including window signs that are permanently attached. | "Sign, wall" means any sign painted on, or attached directly to and supported by, the wall of a building or structure. All wall signs are building-mounted signs. | Replaced with definition from Chapter 21B.15 SMC for consistency. |

| # | Section | Original | Amended | Rationale |
|---|---|---|---|---|
| 15 | Amended: 21A.15.1166 – Sign, window | None | "Sign, window" means any sign applied to or mounted on a window. | Definition added per Planning Commission direction. |
| 16 | Original: 21A.45.010 - Purpose<br><br>Amended: 21A.45.010 – Purpose | The purpose of this chapter is to enhance the visual environment of the City by:<br>(1) Establishing standards that regulate the type, number, location, size, and lighting of signs;<br>(2) Recognizing the private purposes of signs for the identification of businesses and promotion of products and services; and<br>(3) Recognizing the public purposes of signs that includes considerations of traffic safety, economic, and aesthetic welfare. (Ord. O99-29 § 1) | The purpose of this chapter is to enhance and protect the economic vitality and visual environment of the City, allow for the expression of free speech, and promote general safety and welfare by:<br>(1) ~~Establishing standards that regulate~~ Regulating the type, number, location, size, and illumination ~~lighting~~ of signs;<br>(2) Recognizing the ~~private~~ purpose~~s~~ of signs for the identification and economic well-being of businesses in Sammamish ~~of businesses and promotion of products and services~~; and<br>(3) ~~Recognizing the public purposes of signs that~~ Ensuring a safe driving environment; and ~~includes considerations of traffic safety, economic, and aesthetic welfare.~~<br>(4) Recognizing and protecting the use of the public right-of-way as a forum for non-commercial speech; and<br>(5) Facilitating fair and consistent content-neutral enforcement; and<br>(6) Safeguarding and enhancing property values, attracting new residents, and encouraging orderly city development; and<br>(7) Allowing for limited temporary commercial signage in the public right of way, to provide a flow of commercial information to consumers to enable them to make vital decision of purchasing a home, and to further the critical public goal of providing for equal access to housing; and<br>(8) Upholding the goals and policies of the Comprehensive Plan. | Strengthening the purpose section of the Sign Code is crucial for justifying the regulations that follow. |

| # | Section | Original | Amended | Rationale |
|---|---|---|---|---|
| 17 | Original: 21A.45.030 - Exempt Signs<br><br>Amended: 21A.45.030 - Exempt Signs | The following signs or displays are exempted from the regulations under this chapter:<br>(1) Historic site markers or plaques, gravestones, and address numbers;<br>(2) Signs required by law, including but not limited to:<br>(a) Official or legal notices issued and posted by any public agency or court; or<br>(b) Traffic directional or warning signs;<br>(3) Plaques, tablets, or inscriptions indicating the name of a building, date of erection, or other commemorative information, which are an integral part of the building structure or are attached flat to the face of the building, which are non-illuminated, and which do not exceed four square feet in surface area;<br>(4) Incidental signs, which shall not exceed two square feet in surface area; provided, that said size limitation shall not apply to signs providing directions, warnings, or information when established and maintained by a public agency;<br>(5) State or federal flags;<br>(6) Religious symbols; and<br>(7) The flag of a commercial institution, provided no more than one flag is permitted per business premises; and further provided the flag does not exceed 20 square feet in surface area. (Ord. O99-29 § 1) | The following signs or displays are exempted from the regulations under this chapter:<br>(1) Historic ~~site markers or~~ plaques, gravestones, and address numbers;<br>~~(2) Signs required by law, including but not limited to:~~<br>(2) ~~(a)~~ Official or legal notices issued and posted by any public agency or court; or<br>(3) ~~(b)~~ Traffic directional or warning signs as established by the Manual for Uniform Traffic Control Devices (MUTCD);~~;~~<br>(4~~3~~) Plaques, tablets, or inscriptions ~~indicating the name of a building, date of erection, or other commemorative information,~~ which are an integral part of the building structure or are attached flat to the face of the building, which are non-illuminated, and which do not exceed four square feet in surface area;<br>(5~~4~~) Incidental signs, which shall not exceed two square feet in surface area; provided, that said size limitation shall not apply to signs providing directions, warnings, or information when established and maintained by a public agency;<br>(6~~5~~) ~~State or federal~~ Government flags;<br>(6) Nonverbal Religious symbols attached to a place of worship~~; and~~<br>~~(7) The flag of a commercial institution, provided no more than one flag is permitted per business premises; and further provided the flag does not exceed 20 square feet in surface area. (Ord. O99-29 § 1)~~ | These changes were made to make the regulations content-neutral, and to clarify the City's jurisdiction over traffic directional and warning signs. Commercial flag provision removed to avoid promoting commercial speech over non-commercial speech. |
| 18 | Original: 21A.45.040(2) - Prohibited Signs<br><br>Amended: Removed | (2) Private signs on utility poles; | Removed. | Provision removed due to redundancy. Signs on utility poles are banned under provision (3) of the amended version this section. |

| # | Section | Original | Amended | Rationale |
|---|---|---|---|---|
| 19 | Original: 21A.45.050(1) - Sign area calculation<br><br>Amended: 21A.45.050(1) - Sign area calculation | (1) Sign area for nonmonument freestanding signs shall be calculated by determining the total surface area of the sign as viewed from any single vantage point, excluding support structures. | (1) Sign area for ~~nonmonument freestanding~~ pole signs shall be calculated by determining the total surface area of the sign as viewed from any single vantage point, excluding support structures. | Changed to clarify which type of sign falls under this regulation. Definition added for pole signs. |
| 20 | Original: 21A.45.060(1) General Sign Requirements – Off-Premises Directional Signs<br><br>Amended: Removed | All signs, except billboards, community bulletin boards, community identification signs, political signs, real estate signs, and special event signs shall be on-premises signs; provided, that uses located on lots without public street frontage in business and office zones may have one off-premises directional sign of no more than 16 square feet. | Section removed. | References to content-based sign categories removed, as these are no longer allowed. Off-premises directional sign provision removed due to confusion over such signs regarding permitted placement. |
| 21 | Original: 21A.45.060(11) – General sign requirements.<br><br>Amended: Removed | (11) Except as otherwise permitted by this chapter, off-premises directional signs shall not exceed four square feet in sign area. | Sub-section removed. | Contradicted SMC 21A.45.060(1). Unnecessary given presence of other directives on off-premises signs – all forms of off-premises directional signs are otherwise regulated. |

<table>
<tr><th>#</th><th>Section</th><th>Original</th><th>Amended</th><th>Rationale</th></tr>
<tr><td>22</td><td>Original: 21A.45.060(12) – General Sign Requirements and 21A.45.080(2)(b) – Residential Zone Signs<br><br>Amended: 21A.45.060(1) - Permanent signs</td><td>21A.45.060(12) - Mixed use developments in the NB, CB, or O zones are permitted one permanent residential identification sign not exceeding 32 square feet in addition to the maximum sign area requirements in the zone where the mixed use development is located.<br>21A.45.080(2)(b) - One permanent residential development identification sign not exceeding 32 square feet is permitted per development. The maximum height for the sign shall be six feet. The sign may be freestanding or mounted on a wall, fence, or other structure.</td><td>
<table>
<tr><th></th><th colspan="2">Permanent Residential Development Identification Signs</th></tr>
<tr><td></td><td>Residential Zone</td><td>Community Business Zone, Neighborhood Business Zone, Office Zone</td></tr>
<tr><td>Quantity</td><td>Two one-sided signs or one two-sided sign per major entrance</td><td>Two one-sided signs or one two-sided sign per major entrance (8)</td></tr>
<tr><td>Maximum Sign Area</td><td>32 sq ft per sign</td><td>32 sq ft per sign</td></tr>
<tr><td>Maximum Sign Height</td><td>6 ft per sign (9)</td><td>N/A</td></tr>
</table>
8. Permanent residential identification signs are only allowed in the NB, CB, and O-Zones as part of a mixed-use development.<br>9. Applicable only to freestanding signs.</td><td>Number of permanent residential identification signs per major entrance increased from one to two. This ensures readability by drivers coming from either direction towards the development.</td></tr>
<tr><td>23</td><td>Original: 21A.45.070 - Community bulletin board signs<br><br>Amended: Removed</td><td>One community bulletin board sign is permitted within the Sammamish Commons Comprehensive Plan designated center with the following limitations:<br>(1) Community bulletin board signs may not exceed 32 square feet and are only permitted at City Hall.</td><td>Section removed.</td><td>Section was removed in consultation with Parks and Recreation; there were plans for this originally but they did not materialize in the eventual adopted plan.</td></tr>
</table>

| # | Section | Original | Amended | Rationale |
|---|---|---|---|---|
| 24 | Original: 21A.45.080(1)(b) – School<br><br>Amended: Removed | (b) Schools are permitted one sign per school or school facility entrance, not exceeding 25 square feet and not exceeding six feet in height, which may be located in the setback. Two additional wall signs not exceeding 25 square feet attached directly to the school or school facility are permitted. | Provision removed. | School entrance sign provision merged with 21A.45.080(1)(a), which allows signs on "nonresidential uses," of which a school is one, with the dimensions and height restrictions. Additional school wall sign provision removed; City may not allow more square footage for schools than for any other institution. |
| 25 | 21A.45.120 – Signs or displays of limited duration – Preamble<br><br>Amended: 21A.45.070 | The following temporary signs or displays are permitted and except as required by the International Building Code, Chapter 16.20 SMC, Construction Administrative Code, or as otherwise required in this chapter, do not require building permits: | The following temporary signs or displays are permitted and except as required by the International Building Code, Chapter 16.20 SMC, Construction Administrative Code; ~~,~~ or as otherwise required in this chapter, do not require ~~building~~ a sign permit, ~~s:~~ subject to the requirements set out in this chapter. All temporary signs shall not obstruct sight distances and shall follow the regulations prescribed by Chapter 14.01 SMC, Public Works Standards Adopted, and by SMC 21A.25.220, Sight distance requirements. No temporary signs shall be located within center medians or within roundabouts, traffic circles, or islands. Temporary signs shall not be illuminated. | Added language to clarify that all temporary signs must follow Public Works regulations and may not be placed in certain locations in the public right-of-way. |

| # | Section | Original | Amended | Rationale |
|---|---|---|---|---|
| 26 | Original: 21A.45.120 – Signs or displays of limited duration.<br><br>Amended: 21A.45.070(1) – Non-Commercial Temporary Signs | None. | (1) Non-Commercial Temporary Signs.<br>No sign permit is required to post a non-commercial temporary sign in the public right-of-way or on private property if it meets the requirements in this section and in the following table. Non-commercial temporary signs not conforming to the regulations of this section may be approved through a right-of-way permit<br><br>a) Non-commercial temporary signs may be placed between the sidewalk and the right-of-way line. On roads that only have a shoulder and do not have a sidewalk, non-commercial temporary signs must be placed a minimum of 3 feet from the edge of the asphalt.<br>b) Non-commercial temporary signs shall not be placed in the right-of-way within a 150-foot radius of the center of an intersection.<br>c) The City Engineer, in consultation with the director of public works or their designee, and following review of applicable state and city codes, may approve non-commercial temporary sign placement in the improved portion of the public right-of-way or within a 150-foot radius of the center of an intersection provided that the location and sign characteristics will not present a traffic safety issue.<br>d) Non-commercial temporary signs shall not be placed in a manner that negatively affects the health of trees, shrubs, or other landscaping. | Restrictions added per Planning Commission directive to include restrictions on temporary sign placement in the right of way to reduce sign pollution. |

<table>
<tr><th>#</th><th>Section</th><th>Original</th><th>Amended</th><th>Rationale</th></tr>
<tr><td>27</td><td>Original: 21A.45.120(3), (5), and (7) – Signs or displays of limited duration – Political Signs, Community Event Signs, Fundraising Sign<br><br>Amended: 21A.45.070(1) – Non-Commercial Temporary Signs</td><td colspan="2">
<table>
<tr><th></th><th>Non-Commercial Temporary Sign Type I – Placed in Public Right-of-Way (Non-A-Frame)</th><th>Non-Commercial Temporary Sign Type II – Placed in Public Right-of-Way (A-Frame)</th><th>Non-Commercial Temporary Sign Type III – Private Property (All Sign Types) (1)</th></tr>
<tr><td>Size Limit</td><td>4 sq ft</td><td>6 sq ft</td><td>16 sq ft if located less than 50 feet from a street property line; 32 sq ft if located 50 feet or more from a street property line</td></tr>
<tr><td>Height Limit</td><td>3 ft above grade</td><td>3.5 ft</td><td>8 ft</td></tr>
<tr><td>Duration</td><td>180 consecutive days</td><td>2 consecutive days</td><td>180 consecutive days</td></tr>
</table>
1. Placement of off-premises non-commercial temporary signs on private property is subject to the landowner's authorization.
</td><td>See #30 (political signs), #36 (community events) and #38 (fundraising signs) for original categories.<br><br>New table added to replace content-based sign regulations. Intent for new table is to carry forward the framework from the content-based regulations while eliminating problematic categories.</td></tr>
<tr><td>28</td><td>Original: 21A.45.120(1) – Signs or displays of limited duration – Grand Opening Displays<br><br>Amended: 21A.45.070(2) – Temporary Commercial Displays</td><td>(1) Grand Opening Displays.<br>(a) Signs, posters, pennants, strings of lights, blinking lights, balloons, and searchlights are permitted for a period of up to one month to announce the opening of a new enterprise or the opening of an enterprise under new management; and<br>(b) All grand opening displays shall be removed upon the expiration of 30 consecutive days;</td><td>(1) ~~Grand Opening~~ Temporary Commercial Displays.<br>(a) Signs, posters, pennants, strings of lights, blinking lights, balloons, and searchlights are permitted for a period of up to 30 consecutive days once each calendar year at business located in Sammamish in the CB, NB, or O-Zones. ~~to one month to announce the opening of a new enterprise or the opening of an enterprise under new management~~; ~~and~~<br>~~(b) All grand opening displays shall be removed upon the expiration of 30 consecutive days;~~</td><td>Amended to read as content-neutral. Business are now allowed to have festive displays for up to 30 consecutive days once per year.</td></tr>
</table>

| # | Section | Original | Amended | Rationale |
|---|---|---|---|---|
| 29 | Original: 21A.45.120(2) – Signs or displays of limited duration – Construction Signs<br><br>Amended: 21A.45.070(3) - (3) Signs Located on Property with Active Construction | (2) Construction Signs.<br>(a) Construction signs identifying architects, engineers, planners, contractors, or other individuals or firms involved with the construction of a building and announcing the character of the building or the purpose for which the building is intended may be displayed;<br>(b) One non-illuminated, double-faced sign is permitted for each public street upon which the project fronts;<br>(c) No sign shall exceed 32 square feet in surface area or 10 feet in height, or be located closer than 30 feet from the property line of the adjoining property; and<br>(d) Construction signs must be removed by the date of first occupancy of the premises or one year after placement of the sign, whichever occurs first; | (~~2~~3) ~~Construction~~ Signs located on property with active construction.<br>~~(a) Construction signs identifying architects, engineers, planners, contractors, or other individuals or firms involved with the construction of a building and announcing the character of the building or the purpose for which the building is intended may be displayed;~~<br>(~~b~~a) One non-illuminated, double-faced sign is permitted for each public street upon which the project fronts;<br>(~~c~~b) No sign shall exceed 32 square feet in surface area or 10 feet in height, or be located closer than 30 feet from the property line of the adjoining property; and<br>(c~~d~~) ~~Construction s~~Signs must be removed by the date of first occupancy of the premises or one year after placement of the sign, whichever occurs first; | Amended to read as content-neutral. |

| # | Section | Original | Amended | Rationale |
|---|---|---|---|---|
| 30 | Original: 21A.45.120(3) – Signs or displays of limited duration – Political Signs<br><br>Amended: 21A.45.070(1) – Non-Commercial Temporary Signs | (3) Political Signs. Political signs are allowed, subject to the following requirements:<br>(a) Location. (i) Political signs may be displayed on private property with the consent of the property owner;<br>(ii) Political signs may be displayed within public easements or streets; provided, that signs shall not be located within the center median of principal, minor, and collector arterials (as defined) or within roundabouts, traffic circles, or islands;<br>(iii) Political signs located pursuant to subsection (3)(a)(i) or (ii) of this section shall not obstruct sight distances as prescribed by Chapter 14.01 SMC, Public Works Standards Adopted, or by SMC 21A.25.220, Sight distance requirements.<br>(b) Specifications. (i) Political signs located on private property may have a maximum sign area of up to 32 square feet;<br>(ii) Freestanding political signs on private property may be up to eight feet tall;<br>(iii) Political signs located on or within public easements or streets may have a maximum sign area of up to four square feet and may be up to three feet tall above grade;<br>(iv) Political signs located within 15 feet of a street corner or driveway, as further identified in Chapter 14.01 SMC, Public Works Standards Adopted, or by SMC 21A.25.220, Sight distance requirements, shall be further limited in sign area and height as necessary to satisfy sight distance limitations;<br>(c) Removal. (i) Political signs shall be removed within seven days following the election;<br>(ii) Property owners shall be responsible for the removal of political signs located on private property;<br>(iii) The campaign officer or responsible official shall be responsible for the removal of political signs located on or within public easements or streets; | Section removed; sign type covered under non-commercial temporary signs. | Political Sign section and definition removed to ensure content-neutrality. Permitted location, size, and duration are covered under the three non-commercial temporary sign categories. See #27. |

| # | Section | Original | Amended | Rationale |
|---|---|---|---|---|
| 31 | Original: 21A.45.120(4)(a)(i)(B) – Signs or displays of limited duration – Real Estate<br><br>Amended: 21A.45.070(4) - Signs Associated with Properties for Sale or Rent | (B) One off-site sign is allowed on private property or city street right-of-way between the effective date the ordinance codified in this section and December 31, 2010, subject to the following:<br>(1) The individual residential unit or property for sale or rent is not located adjacent to a public street;<br>(2) The off-site sign is located on private property or city street right-of-way, adjacent to the intersection of the primary vehicle entrance to the property and closest public street;<br>(3) When more than three off-site real estate signs are proposed for a location, the fourth proposed sign owner shall install and make available to other licensed real estate agents a frame to accommodate multiple signs;<br>(4) Off-site real estate signage displayed on private property shall be with the consent of the property owner; and<br>(5) Signs located in the city street right-of-way shall be located outside of the improved portion of the right-of-way (behind the sidewalk, roadway shoulder, drainage ditch, etc., whichever is furthest from the traveled roadway), and may be removed by the city if determined to be a hazard or if the placement is otherwise in conflict with the public use of the right-of-way; | Reference to pilot program end date removed; remainder of section merged with real estate-focused signs.<br><br>(2) The off-site sign is located on ~~private property or~~ city street right-of-way adjacent to the intersection of the primary vehicle entrance to the property and closest public street; | Reference to pilot program removed. Regulations were moved into real estate sign table and reorganized to be content-neutral. Private property removed as an approved location for off-site signs, as this type of sign would be covered under other temporary sign categories. |

| # | Section | Original | Amended | Rationale |
|---|---|---|---|---|
| 32 | Original: 21A.45.120(4)(c)– Signs or displays of limited duration – Real Estate<br><br>Amended: 21A.45.070(4) - Signs Associated with Properties for Sale or Rent | (c) On-site commercial (nonresidential) or industrial property for sale or rent signs shall be limited to one sign per street frontage, and shall not exceed 32 square feet in area. The sign shall not exceed 12 feet in height. The sign shall be removed within five days after closing of the sale, lease or rental of the property. A building permit is required and shall be issued for a one-year period. The permit is renewable for one-year increments up to a maximum of three years. | Regulations will be preserved, but no permit will be required. | Provision requiring a permit removed due to difficulty of enforcement. |
| 33 | Original: 21A.45.120(4)(d)– Signs or displays of limited duration – Real Estate<br><br>Amended: 21A.45.070(4) - Signs Associated with Properties for Sale or Rent | (d) On-site residential development for sale or rent signs shall be limited to one sign per development. The sign shall not exceed 32 square feet in area, and shall not exceed 12 feet in height. A building permit is required and shall be issued for a one-year period. The permit is renewable annually for up to a maximum of three years. | Regulations will be preserved, but no permit will be required. | Provision requiring a permit removed due to difficulty of enforcement. |

| # | Section | Original | Amended | Rationale |
|---|---|---|---|---|
| 34 | Original: 21A.45.120(4)(e)– Signs or displays of limited duration – Real Estate<br><br>Amended: 21A.45.070(4) - Signs Associated with Properties for Sale or Rent | (e) Off-site directional signs for residential developments shall be limited to six signs. Each sign shall not exceed 16 square feet in area, and shall include only the name of and directions to the residential development. The sign(s) shall be placed a maximum of two road miles from the nearest residential development entrance. No two signs for one residential development shall be located closer than 500 feet from one another on the same street. A single building permit is required for all signs and shall be issued for a one-year period. The permit number and the permit expiration date must be clearly displayed on the face of each sign. The permit is renewable for one-year increments up to a maximum of three years; provided, that extensions will only be granted if the sign permit applicant has complied with the applicable regulations. | Number of off-site signs allowed reduced to two, and no permit will be required.<br>~~The sign(s) shall be placed a maximum of two road miles from the nearest residential development entrance. No two signs for one residential development shall be located closer than 500 feet from one another on the same street. A single building permit is required for all signs and shall be issued for a one-year period. The permit number and the permit expiration date must be clearly displayed on the face of each sign. The permit is renewable for one-year increments up to a maximum of three years; provided, that extensions will only be granted if the sign permit applicant has complied with the applicable regulations.~~ | Number of off-site signs allowed reduced to two in the interest of reducing sign clutter. Provisions requiring a permit and establishing spacing requirements removed due to difficulty of enforcement. |
| 35 | Original: 21A.45.120(4)(f)– Signs or displays of limited duration – Real Estate<br><br>Amended: Removed | (f) Residential on-premises informational signs shall be limited to one sign per feature, including but not limited to signs for information centers, model homes, parking areas or announcing features such as parks, playgrounds, or trails. Each sign shall not exceed 16 square feet in area, and shall not exceed six feet in height; | Provision removed. | Provision removed due to inability to enforce. |

| | | | | |
|---|---|---|---|---|
| 36 | Original: 21A.45.120(5) – Signs or displays of limited duration – Community Event Signs<br><br>Amended: 21A.45.070(1) – Non-Commercial Temporary Signs | (5) Community Event Signs. Community event signs are allowed, subject to the following requirements:<br>(a) Location. (i) Community event signs may be displayed on private property with the consent of the property owner. (ii) Community event signs may be displayed within public easements or streets; provided, that:<br>(A) Signs shall be A-frame signs as specified in subsection (5)(b) of this section; and<br>(B) Signs shall not be located within the center median of principal, minor, and collector arterials (as defined) or within roundabouts, traffic circles or islands.<br>(iii) Community event signs located pursuant to subsection (5)(a)(i) or (ii) of this section shall not obstruct sight distances as prescribed by Chapter 14.01 SMC, Public Works Standards Adopted, or by SMC 21A.25.220, Sight distance requirements.<br>(iv) The director, in consultation with the City engineer, and following review of applicable state and City codes, may approve temporary sign placement in the public right-of-way on hardscape areas (i.e., concrete pads or other sidewalk areas not used for pedestrian travel); provided, that sign location does not conflict with subsection (5)(a)(i) or (ii) of this section.<br>(b) Specifications. (i) Community event signs on private property may have a maximum sign area of 32 square feet; (ii) Community event signs on public easements or streets shall be "A-frame" signs that shall not exceed six square feet in area for each sign, and shall not exceed 42 inches in height; (iii) Community event signs located within 15 feet of a street corner or driveway, as further identified in Chapter 14.01 SMC, Public Works Standards Adopted, or by SMC 21A.25.220, Sight distance requirements, shall be further limited in sign area and height as necessary to satisfy sight distance limitations; and (iv) Community event signs shall be stationary and shall not be illuminated. | Section removed; sign type covered under non-commercial temporary signs. | Community Event Sign section and definition removed to ensure content-neutrality. Permitted location, size, and duration are covered under the three non-commercial temporary sign categories. See #27. |

| # | Section | Original | Amended | Rationale |
|---|---|---|---|---|
| | | (c) Removal. (i) Community event signs shall be removed within seven days following the end of the community fair, festival, or event; provided, that the signs shall not be displayed for more than a total of 21 calendar days; and (ii) Sign removal shall be the responsibility of the event sponsor; | | |
| 37 | Original: 21A.45.120(6) - Community Banner Sign<br><br>Amended: 21B.45.140(4) – Community Banner Signs | a) Community banners shall only be located on public banner poles erected by the City for that use;<br>b) Letters on the sign shall not be less than 12 inches in height except for lettering associated with sponsor logos;<br>c) Banners shall not be illuminated or have any attention-getting lights; and<br>d) Sponsor logos shall be limited to the name and corporate symbol of the sponsor. | Provisions removed, moved to 21B.45.140(4). | Provision removed and moved to Chapter 21B.45 SMC, as the community banner poles are within the boundaries of Town Center. See #41 and #42. |

| | | | | |
|---|---|---|---|---|
| 38 | Original 21A.45.120(7) – Fundraising Signs<br><br>Amended: 21A.45.070(1) – Non-Commercial Temporary Signs | (7) Fundraising Sign. Fundraising signs are allowed subject to the following provisions:<br>(a) Location. (i) Fundraising signs may only be located on private property as follows:<br>(A) On any property zoned office (O), community business (CB), neighborhood business (NB), and Town Center A (TC-A); or (B) On property with a residential zoning designation (R), where such property abuts a principal, minor, or collector arterial. (ii) No more than one fundraising sign may be located on any one property;<br>(iii) Any fundraising sign authorized located on a street corner or driveway shall conform to Chapter 14.01 SMC, Public Works Standards, and SMC 21A.25.220, Sight distance requirements; and<br>(iv) All signs shall be located on private property with the written permission of the property owner.<br>(b) Specifications. Fundraising signs may be attached to a wall or be freestanding signs subject to the following design specifications:<br>(i) Fundraising signs located on property zoned O, CB, NB, and TC-A shall be limited to a maximum area of 32 square feet; (ii) Fundraising signs located on property zoned residential (R): (A) Shall be limited to a maximum area of 16 square feet if located less than 50 feet from a street property line; and<br>(B) Shall be limited to a maximum area of 32 square feet if located 50 feet or more from a street property line;<br>(iii) Signs shall not be illuminated; (iv) Freestanding signs shall not exceed a height of eight feet; (v) All signs shall be constructed of a solid opaque material; and<br>(vi) Freestanding signs shall be located outside of required zoning setbacks.<br>(c) Removal. (i) A permit is required and shall be issued for a six-month period. The permit number and the permit expiration date must be clearly displayed on the face of each sign. The permit may be renewed upon payment of | Section removed; sign type covered under non-commercial temporary signs. | Fundraising Sign section and definition removed to ensure content-neutrality. Permitted location, size, and duration are covered under the three non-commercial temporary sign categories. See #27. |

| # | Section | Original | Amended | Rationale |
|---|---|---|---|---|
| | | the required fee and subject to further review and approval under the requirements of this section;<br>(ii) Removal of the fundraising sign is the responsibility of the property owner and/or applicant. (Ord. O2011-305 § 1 (Att. A); Ord. O2009-258 § 1 (Att. A); Ord. O2009-249 § 1; O2005-180 § 1; Ord. O99-29 § 1) | | |
| 39 | Original: Article II. Electronic Reader Board Pilot Program - SMC 21A.45.130 – 180.<br><br>Amended: Removed | SMC 21A.45.130 – 180. | Article removed; electronic reader boards installed under pilot program will be covered under new non-conforming signs section of code. Council action is required to continue this program. | This pilot program ended in 2014. Rather than create a separate category for these specific signs (of which there are 3 currently operating), these will fall under the non-conforming sign section. The signs will be allowed to remain where they are provided they are not relocated, replaced, or otherwise altered in a structural way. |
| 40 | Original and Amended: 21B.45.110(1)(f) - general sign design standards. | (f) Total sign area for primary and secondary wall signs associated with uses occupying the ground level of a building shall not exceed 10 percent of the groundlevel building façade associated with the sign; | (f) Total sign area for primary and secondary wall signs associated with uses occupying the ground level of a building shall not exceed 10 percent of the groundlevel building façade associated with the sign; provided that there is a minimum allowed sign area of 10 square feet and a maximum allowed sign area of 320 square feet for primary and secondary wall signs. | Changed per direction from Planning Commission. |

| # | Section | Original | Amended | Rationale |
|---|---|---|---|---|
| 41 | Original and Amended: 21B.45.140 (4) – Community Banner Signs | (4) Community Banner Signs.<br>(a) Community banner signs shall only be located on public banner poles erected by the City for that use;(b) Letter on such signs shall not be less than 12 inches in height except for lettering associated with<br>sponsor logos;<br>(c) Community banner signs shall not be illuminated or have any attention-getting lights; and<br>(d) Sponsor logos shall be limited to the name and corporate symbol of the sponsor. | (4) Community Banner Signs.<br>(a) Community banner signs shall only be located on public banner poles erected by the City for that use;<br>(b) Letter on such signs shall not be less than 12 inches in height except for lettering associated with<br>sponsor logos;<br>(c) Community banner signs shall not be illuminated or have any attention-getting lights; and<br>~~(d) Sponsor logos shall be limited to the name and corporate symbol of the sponsor.~~<br>(d) Only City-sponsored events may be advertised using the Community Banner program | Changed per direction from Commission on March 16. |
| 42 | Original: 21B.45.180(8)<br><br>Amended: 21B.15.348 – Sign, community banner | "Sign, community banner" means a temporary sign, located on City banner poles, which advertises an event that would provide civic, cultural, educational, philanthropic, or service opportunities hosted or promoted by the City or a community group that is not-for-profit or nonprofit and nonpolitical with an IRS designation of Section 501(c) or (d). | "Sign, community banner" means a temporary sign, located on City banner poles, which advertises a City-sponsored or hosted event. ~~an event that would provide civic, cultural, educational, philanthropic, or service opportunities hosted or promoted by the City or a community group that is not-for-profit or nonprofit and nonpolitical with an IRS designation of Section 501(c) or (d).~~ | Definition changed to reflect new community banner restrictions. See #41. |
| 43 | Original: 21B.45.180(19)<br><br>Amended: 21B.15.349.9 – Sign, permanent residential development identification | "Sign, permanent residential development identification" means a permanent monument or wall sign identifying the residential development upon which the sign is located. | "Sign, permanent residential development identification" means a permanent sign identifying the residential development upon which the sign is located. | Replaced with definition from Chapter 21A.15 SMC for consistency. |

| # | Section | Original | Amended | Rationale |
|---|---|---|---|---|
| 44 | Original: 21B.45.180(25)<br><br>Amended: 21B.15.349.14 - Sign, temporary | "Sign, temporary" means a sign that is designed to be displayed for a limited amount of time and is not permanently placed or affixed such as to prevent its removal. | "Sign, temporary" means any sign, banner, pennant, or valance constructed of cloth, canvas, light fabric, cardboard, wallboard or other like materials not permanently attached to the ground, wall or building, intended to be displayed for a short period of time only. | Replaced with definition from Chapter 21A.15 SMC for consistency. |

## Chapter 21A.15

## TECHNICAL TERMS AND LAND USE DEFINITIONS

**21A.15.469.1 Flag.**
"Flag" means a fabric sheet of square, rectangular or triangular shape which is mounted on a pole, cable or rope at one (1) end.

**21A.15.469.2 Flag, government.**
"Flag, government" means any flag or badge or insignia of the United States, State of Washington, King County, City of Sammamish, or official historic plaque of any governmental jurisdiction or agency.

**21A.15.1085 Sign.**

"Sign" means any device, structure, fixture, or placard that is visible from a public right-of-way or surrounding properties and uses graphics, symbols, or written copy for the purpose of advertising or identifying any establishment, product, goods, or service. (Ord. O2003-132 § 10)

**21A.15.1086 Sign, A-Frame.**
"Sign, A-frame" means a freestanding 2-panel foldable, portable temporary sign made of rigid material.

**21A.15.1090 Sign, awning.**

"Sign, awning" means a sign painted on or attached directly to and supported by an awning. An awning may be constructed of rigid or nonrigid materials and may be retractable or nonretractable. (Ord. O2003-132 § 10)

**21A.15.1095 Sign, changing message center.**

"Sign, changing message center" means an electrically controlled sign that contains advertising messages that changes at intervals of three minutes or greater. (Ord. O2003-132 § 10)

**21A.15.~~1096~~1097 Sign, ~~community banner.~~**

**commercial.**

"Sign, ~~community banner~~Commercial" means a ~~temporary~~ sign~~, located on City banner poles, which advertises an event that would provide civic, cultural, educational, philanthropic,~~ erected for a business transaction or ~~service opportunities hosted or promoted by~~advertising the ~~City or a community group that is not-for-profit or nonprofit~~exchange of goods and ~~nonpolitical with an IRS designation of Section 501(c) or (d). (Ord. O2005-180 § 1)~~

~~21A.15.1100 Sign, community bulletin board.~~

~~"Sign, community bulletin board" means a permanent sign which may contain either electronic or permanent graphics, symbols, or words that is used to notify the public of community events and public~~ services~~, and which contains no commercial advertising.~~. ~~(Ord. O2004-153 § 1; Ord. O2003-132 § 10)~~

~~21A.15.1101 Sign, community event.~~

~~"Sign, community event" means a temporary sign announcing or promoting a nonprofit or not-for-profit sponsored community fair, festival, event (community events include but are not limited to regularly scheduled events or meetings by churches, homeowners' associations and other community groups).~~ ~~(Ord. O2005-180 § 1)~~

**21A.15.1105 Sign, directional.**

"Sign, directional" means a sign that is primarily designed to guide or direct pedestrian or vehicular traffic to an area, business, place, or convenience, and may include incidental graphics such as trade names and trademarks. ~~(Ord. O2003-132 § 10)~~

**21A.15.1110 Sign, freestanding.**

"Sign, freestanding" means a permanent sign ~~standing~~fixed directly ~~upon~~to the ground or having one or more supports ~~standing~~fixed directly ~~upon~~to the ground, and being detached from any building or fence. (Ord. O2003-132 § 10)

**21A.15.1115 Sign, fuel price.**

"Sign, fuel price" means a sign utilized to advertise the price of gasoline and/or diesel fuel. (Ord. O2003-132 § 10)

~~21A.15.1117 Sign, fundraising.~~

~~"Sign, fundraising" is a sign that is erected by a nonprofit organization for the purposes of raising money to support a cause or purpose promoted by the nonprofit or not-for-profit organization. (Ord. O2011-305 § 1 (Att. A))~~

**21A.15.1120~~-~~ Sign, incidental.**

"Sign, incidental" means a sign, emblem or decal designed to inform the public of goods, facilities, or services available on the premises, and may include but not be limited to signs designating:

(1) Restrooms;

(2) Hours of operation;

(3) Acceptable credit cards;

(4) Property ownership or management;

(5) Phone booths; and

(6) Recycling containers. (Ord. O2003-132 § 10)

**21A.15.1125 Sign, indirectly illuminated.**

"Sign, indirectly illuminated" means a sign that is illuminated entirely from an external artificial source. (Ord. O2003-132 § 10)

**21A.15.1130 Sign, monument.**

"Sign, monument" means a freestanding sign that is above ground level and is anchored to the ground by a solid base, with no open space between the sign and the ground. (Ord. O2003-132 § 10)

**21A.15.1131 Sign, non-commercial.**
"Sign, non-commercial" means any sign that is not a commercial sign. This definition also includes signs regarding fund raising or membership drive activities for noncommercial or nonprofit entities or groups.

**21A.15.1135 Sign, off-premises directional.**

"Sign, off-premises directional" means a sign that contains no advertising of a commercial nature that is used to direct pedestrian or vehicular traffic circulation to a facility, service, or business located on other premises within 660 feet of the sign. (Ord. O2003-132 § 10)

**21A.15.1140 Sign, on-premises.**

"Sign, on-premises" means a sign that displays a message that is incidental to and directly associated with the use of the property on which it is located. (Ord. O2003-132 § 10)

**21A.15.1144 Sign, permanent.**
"Sign, permanent" means any sign which is intended to be lasting and is constructed from an enduring material such as masonry and metal which remains unchanged in position, character, and condition (beyond normal wear), and is permanently affixed to the ground, wall or building, provided the sign is listed as a permanent sign in the ordinance.

**21A.15.1145 Sign, permanent residential development identification.**

"Sign, permanent residential development identification" means a permanent sign identifying the residential development upon which the sign is located. (Ord. O2003-132 § 10)

**21A.15.~~1148~~1146 Sign, ~~political.~~**

~~"Political sign~~**pole.**
"Sign, pole" means a freestanding sign ~~advertising a candidate~~having one or ~~candidates for public elective office,~~more supports standing directly upon the ground, and being detached from any building or ~~a political party, or signs urging a particular vote on a public issue decided by ballot. (Ord. O2005-180 § 1)~~fence.

**21A.15.1150 Sign, portable.**

"Sign, portable" means a sign that is capable of being moved and is not permanently affixed to the ground, a structure, or building. (Ord. O2003-132 § 10)

**21A.15.1155 Sign, projecting.**

"Sign, projecting" means any sign that is attached to and supported by the exterior wall of a building with the exposed face of the sign on a plane perpendicular to the wall of the building, projecting more than one foot from the wall of a building and vertical to the ground. (Ord. O2003-132 § 10)

~~21A.15.1160 Sign, time and temperature.~~

**21A.15.1159 Sign, temporary.**
"Sign, temporary" means any sign, banner, pennant, or valance constructed of cloth, canvas, light fabric, cardboard, wallboard or other like materials not permanently attached to the ground, wall or building, intended to be displayed for a short period of time only.

**21A.15.1160 Sign, time and temperature.**
"Sign, time and temperature" means an electrically controlled sign that contains messages for date, time, and temperature, which changes at intervals of one minute or less. (Ord. O2003-132 § 10)

**21A.15.1165 Sign, wall.**

"Sign, wall" means any sign painted on, or attached directly to and supported by, the wall of a building or structure~~, with the exposed face of the sign on a plane parallel to the portion of the building or structure to which it is attached, projecting no more than one foot from the building or structure, including window~~. All wall signs ~~that~~ are ~~permanently attached.~~building-mounted signs. (Ord. O2003-132 § 10)

**21A.15.1166 Sign, window.**
"Sign, window" means any sign applied to or mounted on a window.

**21A.15.1250 Street frontage.**
"Street frontage" means any portion of a lot or combination of lots that directly abut a public right-of-way.
(Ord. O2003-132 § 10)

**Chapter 21A.45**
**~~DEVELOPMENT STANDARDS – SIGNS~~**

**SIGNAGE**

Sections:

~~Article I. General Provisions~~

~~21A.45.010 Purpose.~~

~~21A.45.020 Permit requirements.~~

~~21A.45.030 Exempt signs.~~

~~21A.45.040 Prohibited signs.~~
~~21A.45.050~~ 21A.45.010 Purpose.
21A.45.020 Permit requirements.
21A.45.030 Exempt signs.
21A.45.040 Prohibited signs.
21A.45.050 Sign area calculation.

~~21A.45.060 General sign requirements.~~

~~21A.45.070 Community bulletin board signs.~~

~~21A.45.080 Residential zone signs.~~

~~21A.45.090 Office zone signs.~~

~~21A.45.100 Neighborhood business zone signs.~~

~~21A.45.110 Community business zone signs.~~

~~21A.45.120 Signs or displays of limited duration.~~

~~Article II. Electronic Reader Board Pilot Program~~

~~21A.45.130 Pilot program established – Applicability.~~

~~21A.45.140 Definition of electronic reader board sign.~~

~~21A.45.150 Location of electronic reader board signs.~~

~~21A.45.160 Specifications of electronic reader board signs.~~

~~21A.45.170 Pilot program monitoring.~~

~~21A.45.180 Duration of pilot program.~~

~~**Article I. General Provisions**~~

21A.45.060 Permanent signs.
21A.45.070 Temporary signs.
21A.45.080 Legal non-conforming signs.
21A.45.090 Variance.
21A.45.100 Enforcement.

**21A.45.010 Purpose.**

The purpose of this chapter is to enhance and protect the economic vitality and visual environment of the City, allow for the expression of free speech, and promote general safety and welfare by:

(1) ~~(1) Establishing standards that regulate~~Regulating the type, number, location, size, and ~~lighting~~illumination of signs; and
(2) ~~(2)~~ Recognizing the ~~private purposes~~purpose of signs for ~~the~~ identification and economic well-being of businesses ~~and promotion of products and services~~in Sammamish; and
(3) ~~(3)~~ Ensuring a safe driving environment; and
~~(3)~~(4) Recognizing and protecting the use of the public ~~purposes of signs that includes considerations of traffic safety, economic, and aesthetic welfare. (Ord. O99-29 § 1)~~right-of-way as a forum for non-commercial speech; and
(5) Facilitating fair and consistent content-neutral enforcement; and
(6) Safeguarding and enhancing property values, attracting new residents, and encouraging orderly development; and
(7) Allowing for limited temporary commercial signage in the public right of way, to provide a flow of commercial information to consumers to enable them to make vital decision of purchasing a home, and to further the critical public goal of providing for equal access to housing; and
(8) Upholding the goals and policies of the Comprehensive Plan.

**21A.45.020 Permit requirements.**

(1) ~~(1)~~ Except as otherwise ~~permitted by~~provided in this chapter, no sign shall be erected, altered, or relocated ~~without approval by~~within the City~~.~~ without a permit issued by the City.

(2) ~~(2)~~ No ~~building~~ permit shall be required for repainting, cleaning, or other normal maintenance and repair of a permitted sign, or for sign face and copy changes that do not alter the size or structure of the sign. ~~(Ord. O99-29 § 1)~~

**21A.45.030 Exempt signs.**

The following signs or displays are exempted from the ~~regulations under~~ permitting requirements of this chapter~~:~~, but shall conform to the other requirements set out in this chapter:

(1) ~~(1)~~ Historic ~~site markers or~~ plaques, gravestones, and address numbers;

~~(2) Signs required by law, including but not limited to:~~

~~(3)~~(2) ~~(a)~~ Official or legal notices issued and posted by any public agency or court; or

~~(b) Traffic directional or warning signs;~~

(3) ~~(3)~~ Traffic control signs established by the Manual on Uniform Traffic Control Devices (MUTCD) or authorized by City of Sammamish Department of Public Works;

~~(5)~~(4) Plaques, tablets, or inscriptions ~~indicating the name of a building, date of erection, or other commemorative information,~~ which are an integral part of the building structure or are attached flat to the face of the building, which are non-illuminated, and which do not exceed four square feet in surface area;

~~(6)~~(5) ~~(4)~~ Incidental signs, which shall not exceed two square feet in surface area; provided, that said size limitation shall not apply to signs ~~providing directions, warnings, or information~~ when established and maintained by a public agency;

~~(7)~~(6) ~~(5) State or federal~~Government flags; and

~~(6) Religious~~Nonverbal religious symbols~~; and~~

~~(9)~~(7) ~~(7) The flag~~ attached to a place of ~~a commercial institution, provided no more than one flag is permitted per business premises; and further provided the flag does not exceed 20 square feet in surface area. (Ord. O99-29 § 1)~~worship.

**21A.45.040 Prohibited signs.** SHARE

~~Except as indicated by this chapter, the following signs or displays are prohibited:~~

~~(2)~~(1) ~~(1)~~ Portable signs including, but not limited to, sandwich/A-frame signs and mobile readerboard signs, and excluding signs permitted under SMC ~~21A.45.120;~~ 21A.45.070;

~~(2) Private signs on utility poles;~~

~~(4)~~(2) ~~(3)~~ Signs which, by reason of their size, location, movement, content, coloring, or manner of illumination may be confused with traffic control signs or signals;

~~(5)~~(3) ~~(4)~~ Signs located in the public right-of-way, except where permitted in this chapter; provided, that in no case shall temporary signs permitted under SMC ~~21A.45.120~~ 21A.45.070 be located within travel lanes or sidewalks, or be attached to traffic control signs, utility or signal poles;

~~(6)~~(4) ~~(5)~~ Posters, pennants, strings of lights, blinking lights, balloons, searchlights, and other displays of a carnival nature; except as architectural features, or on a limited basis as seasonal decorations or as provided for in SMC ~~21A.45.120 as grand opening~~ 21A.45.070 as temporary commercial displays;

~~(7)~~(5) ~~(6)~~ Changing message center signs, where the message changes more frequently than every three minutes; and

~~(8)~~(6) ~~(7)~~ Billboards. ~~(Ord. O2005-180 § 1; Ord. O99-29 § 1)~~

**21A.45.050 Sign area calculation.** SHARE

~~(a)~~ ~~(1) Sign area for nonmonument freestanding signs shall be calculated by determining the total surface area of the sign as viewed from any single vantage point, excluding support structures.~~

(1) ~~(2)~~ Sign area for pole signs shall be calculated by determining the total surface area of the sign as viewed from any single vantage point, excluding support structures.

~~(1)~~(2) Sign area for letters or symbols painted or mounted directly on walls or monument signs or on the sloping portion of a roof shall be calculated by measuring the smallest single rectangle that will enclose the combined letters and symbols.

~~(2)~~(3) ~~(3)~~ Sign area for signs contained entirely within a cabinet and mounted on a wall, roof, or monument shall be calculated by measuring the entire area of the cabinet. (Ord. O99-29 § 1)

**21A.45.060 ~~General sign requirements.~~** SHARE

~~(1) All~~ **Permanent signs**~~, except billboards, community bulletin boards, community identification signs, political signs, real estate signs, and special event signs shall be on-premises signs; provided, that uses located on lots without public street frontage in business and office zones may have one off-premises directional sign of no more than 16 square feet.~~.

~~(2) Fuel price signs shall not be included in sign area or number limitations of SMC 21A.45.090 through 21A.45.110, provided such signs do not exceed 20 square feet per street frontage.~~

~~(3) Projecting and awning signs and signs mounted on the sloping portion of roofs shall not be permitted for uses in the residential zones. In other zones, projecting and awning signs and signs mounted on the sloping portion of roofs may be used in lieu of wall signs, provided:~~

~~(a) They maintain a minimum clearance of eight feet above finished grade;~~

~~(b) They do not project more than six feet perpendicular from the supporting building facade;~~

~~(c) They meet the standards of subsection (10) of this section if mounted on the roof of a building; and~~

~~(d) They shall not exceed the number or size permitted for wall signs in a zone.~~

~~(4) Changing message center signs and time and temperature signs, which can be wall or freestanding signs, shall not exceed the size permitted for wall or freestanding signs, and shall be permitted only in the NB, CB, and O zones, except that changing message center signs may be permitted in the R zone, subject to the provisions of SMC 21A.45.070. Changing message center signs and time and temperature signs shall not exceed the maximum sign height permitted in the zone.~~

(1) ~~(5)~~ Table of Permitted Signs

The table below outlines the regulations for permanent signs in the City of Sammamish. All permanent signs must be approved through the permitting process. Unless otherwise stated herein, all permanent signs must be on-site. No permanent sign may be placed in the City's right-of-way.

Key

X – Prohibited

N/A – Not Applicable – Sign Type Not Allowed in Zone

| | Residential Zone | Community Business Zone(1)(2) | Neighborhood Business Zone(1)(2) | Office Zone(1)(2) |
|---|---|---|---|---|
| | Freestanding Signs(3) | | | |
| Quantity(4) | X | One per street frontage(5) | | One per street frontage |
| Maximum Sign Area | N/A | 85 sq ft, + 20 sq ft for each additional business in a multiple tenant structure up to 145 sq ft. | 50 sq ft | |
| Combined Sign Area Limit for Lots with Multiple Freestanding Signs(6) | N/A | 250 sq ft | 150 sq ft | 80 sq ft |
| Maximum Height | N/A | 20 feet | 15 feet | |
| | Home Business Signs | | | |
| Maximum Sign Area(7) | 6 sq ft | N/A | | |
| | Permanent Residential Development Identification Signs | | | |
| Quantity | Two one-sided signs or one two-sided sign per major entrance | Two one-sided signs or one two-sided sign per major entrance (8) | | |
| Maximum Sign Area | 32 sq ft per sign | 32 sq ft per sign | | |
| Maximum Sign Height | 6 ft per sign (9) | N/A | | |
| | Projecting or Awning Signs Mounted on the Sloping Portion of Roofs (10) | | | |
| Quantity (11) | X | One Allowed in Lieu of Wall Signs | | |
| Maximum Sign Area | N/A | No greater than 15 percent of building façade | No greater than 10 percent of building façade | |

| | Residential Zone | Community Business Zone(1)(2) | Neighborhood Business Zone(1)(2) | Office Zone(1)(2) |
|---|---|---|---|---|
| Minimum Clearance above Finished Grade (12) | N/A | 8 ft | | |
| Maximum Projection, Perpendicular from Supporting Building Façade | N/A | 6 ft | | |
| | Signs on Property with Public Agency Facilities (13) | | | |
| Quantity | 2 per Facility | X | | |
| Maximum Sign Area | 30 sq ft | N/A | | |
| Maximum Height | 6 ft | N/A | | |
| | Sign on Residentially Zoned Property with Nonresidential Use (14) | | | |
| Quantity | One | X | | |
| Maximum Sign Area | 25 sq ft | N/A | | |
| Maximum Height | 6 ft | N/A | | |
| | Wall Signs | | | |
| Maximum Sign Area (15) | N/A (16) | 15 percent of building façade | 10 percent of building façade | 10 percent of building façade (17) |

Development Conditions

1. Directional signs for surface parking areas or parking structures located in the R-, CB, NB, and O-Zones shall not be included in the sign area or number ~~limitation of SMC 21A.45.080 through 21A.45.110, provided~~limitations stated in this table, provided that they shall not exceed six square feet in surface area and are limited to one for each entrance or exit ~~to surface parking areas or parking structure.~~.

~~(6) Sign Illumination and Glare.~~

2. ~~(a) All~~Fuel price signs shall not be included in ~~the NB, CB,~~sign area or ~~O zones,~~number limitations referenced in this table, provided such signs do not exceed 20 square feet per street frontage.

3. Changing message center signs and time and ~~community bulletin boards~~temperature signs can be wall or freestanding signs, and shall not exceed the size permitted for wall or freestanding signs.

4. Corner lots with a street frontage of less than 100 feet on each street shall be permitted only one freestanding sign.

~~2.~~5. Multiple tenant developments in the ~~R~~CB and NB zone~~,~~ that have more than 300 feet of street frontage on one street may ~~be internally illuminated;~~have one additional freestanding sign for each 300 feet of street frontage, or portion thereof. Such signs shall be separated from one another by a minimum of 150 feet, if located on the same street frontage.

~~(b) Unless otherwise provided for in subsection (6)(a) of this section, signs in the R zones may only be indirectly illuminated, provided the light source for indirectly illuminated signs shall be no farther away from the sign than the height of the sign;~~

~~(c) Indirectly illuminated signs shall be arranged so that no direct rays of light are projected from such artificial source into residences or any street right-of-way;~~

~~(d) Electrical requirements for signs shall be governed by Chapter 19.28 RCW and Chapter 296-46-910 WAC; and~~

~~(e) Signs with an on/off operation shall be permitted only in the CB zone.~~

~~(7) Maximum height for wall signs shall not extend above the highest exterior wall or structure upon which the sign is located.~~

~~(8) Maximum height for projecting signs shall not extend above the highest exterior wall upon which the projecting sign is located.~~

~~(9) Maximum height for awning signs shall not extend above the height of the awning upon which the awning sign is located.~~

6. ~~(10)~~ On lots where more than one freestanding sign is permitted, the sign area permitted for individual freestanding signs may be combined.

7. Home business signs may only be wall signs.

8. Permanent residential identification signs are only allowed in the NB, CB, and O-Zones as part of a mixed-use development.

9. Applicable only to freestanding signs.

~~3.~~10. Any sign attached to the sloping surface of a roof shall be installed or erected in such a manner that there are no visible support structures, shall appear to be part of the building itself, and shall not extend above the roof ridge line of the portion of the roof upon which the sign is attached.

~~(11) Except as otherwise permitted by this chapter, off-premises directional~~ Maximum height for awning signs shall not ~~exceed four square feet in sign area.~~

~~(12) Mixed use developments in~~ extend above the ~~NB, CB, or O zones are permitted one permanent residential identification sign not exceeding 32 square feet in addition to the maximum sign area requirements in the zone where the mixed use development is located. (Ord. O2004-153 § 2; Ord. O99-29 § 1)~~

## ~~21A.45.070 Community bulletin board signs.~~

~~One community bulletin board sign is permitted within the Sammamish Commons Comprehensive Plan designated center with the following limitations:~~

~~(1) Community bulletin board signs may not exceed 32 square feet and are only permitted at City Hall. (Ord. O2004-153 § 3; Ord. O99-29 § 1)~~

## ~~21A.45.080 Residential zone signs.~~

~~Signs in the R zone are limited as follows:~~

~~(1) Nonresidential Use.~~

~~(a) One sign identifying nonresidential uses on the same residential parcel, not otherwise regulated by this section, not exceeding 25 square feet and not exceeding six feet in height is permitted;~~

~~4.~~11. ~~(b) Schools are permitted one sign per school or school facility entrance, not exceeding 25 square feet and not exceeding six feet in~~ height~~,~~ of the awning upon which ~~may be located in the setback. Two additional wall signs not exceeding 25 square feet attached directly to the school or school facility are permitted;~~the awning sign is located.

~~(c) Public agency facilities, including but not limited to civic centers, community centers, public agency offices, and public utility yards, are permitted two signs for each facility. Each sign shall be limited to a sign area of not more than 30 square feet and not exceeding a height of more than six feet for freestanding signs;~~

~~(d) Home occupation and home industry signs are limited to wall signs not exceeding six square feet.~~

~~(2) Residential Use.~~

12. ~~(a) One~~ Maximum height for projecting signs shall not extend above the highest exterior wall upon which the projecting sign is located.

13. See SMC 21A.15.915 for a list of permitted public agencies.

Non-residential ~~identification sign not exceeding two square feet is permitted; and~~

~~5.~~14. ~~(b) One permanent~~ uses of residential ~~development identification sign not exceeding 32 square feet is permitted per development. The maximum height for the sign shall be six feet. The sign may be freestanding or mounted on a wall, fence, or other structure. (Ord. O2009-249 § 1; Ord. O2005-180 § 1; Ord. O99-29 § 1)~~property as outlined in Chapter 21A.20 SMC.

## ~~21A.45.090 Office zone signs.~~

~~Signs in the O zones shall be limited as follows:~~

15. ~~(1)~~ Maximum height for wall signs and changing message center signs shall not extend above the highest exterior wall or structure upon which the sign is located.

16. Wall signs are ~~permitted, provided they do not total an area more than 10 percent of the building facade on which they are located and provided they are limited to~~ allowed in Residential zones to identify schools, home businesses, and other non-residential uses, subject to the regulations listed in this table.

~~6.~~17. Only on building facades with street frontage.

~~(1)~~(2) ~~(2) Freestanding~~Illumination of Permanent Signs~~.~~

~~(a) One freestanding sign not exceeding 50 square feet is permitted for each street frontage of the lot, provided corner lots with a street frontage of less than 100 feet on each street shall be permitted only one freestanding sign;~~

~~(b) On lots where more than one freestanding sign is permitted, the sign area permitted for individual freestanding signs may be combined; provided the combined sign does not exceed 80 square feet; and~~

~~(c) The maximum height for freestanding signs shall be 15 feet. (Ord. O99-29 § 1)~~

## ~~21A.45.100 Neighborhood business zone signs.~~

~~Signs in the NB zones shall be limited as follows:~~

~~(1) Wall signs are permitted, provided they do not total an area more than 10 percent of the building facade on which they are located;~~

~~(2) Freestanding Signs.~~

~~(a) One freestanding sign not exceeding 50 square feet is permitted for each street frontage of the lot, provided corner lots with a street frontage of less than 100 feet on each street shall be permitted only one freestanding sign;~~

~~(b) Multiple tenant developments that have more than 300 feet of street frontage on one street may have one additional freestanding sign for each 300 feet of street frontage, or portion thereof. Such signs shall be separated from one another by a minimum of 150 feet, if located on the same street frontage;~~

~~(c) On lots where more than one freestanding sign is permitted, the sign area permitted for individual freestanding signs may be combined; provided the combined sign does not exceed 150 square feet; and~~

~~(d) The maximum height for freestanding signs shall be 15 feet. (Ord. O99-29 § 1)~~

The table below outlines the regulations for illumination of permanent signs in the City of Sammamish. Temporary signs, governed by SMC21A.45.070, shall not be illuminated. All permanent signs, including the requested illumination, must be approved through the permitting process. All electrical components for signs shall be governed by Chapter 19.28 RCW and Chapter 296-46-910 WAC.

Key

P – Permitted, pursuant to Permit issued by City

X – Prohibited

| | R-Zone | CB-Zone | NB-Zone | Office Zone |
|---|---|---|---|---|
| Internal Illumination (1) | X | P | | |
| Indirect Illumination (1)(2) | P | | | |
| Signs with an On/Off Operation | X | P | X | |

Development Conditions

1. The light source for indirectly illuminated signs shall be no farther away from the sign than the height of the sign.

2. Indirectly illuminated signs shall be arranged so that no direct rays of light are projected from such artificial source into residences or any street right-of-way.

**21A.45.~~110 Community business zone~~070 Temporary signs.** SHARE

~~Signs in the CB zone shall be limited as follows:~~

~~(1) Wall signs are permitted, provided they do not total an area more than 15 percent of the building facade on which they are located;~~

~~(2) Freestanding Signs.~~

~~(a) One freestanding sign not exceeding 85 square feet, plus an additional 20 square feet for each additional business in a multiple tenant structure but not to exceed 145 square feet total, is permitted for each street frontage of the lot, provided corner lots with a street frontage of less than 100 feet on each street shall be permitted only one freestanding sign;~~

~~(b) Multiple tenant developments that have more than 300 feet of street frontage on one street may have one additional freestanding sign for each 300 feet of street frontage, or portion thereof. Such signs shall be separated from one another by a minimum of 150 feet, if located on the same street frontage;~~

~~(c) On lots where more than one freestanding sign is permitted, the sign area permitted for individual freestanding signs may be combined provided the combined sign area does not exceed 250 square feet; and~~

~~(d) The maximum height for freestanding signs shall be 20 feet. (Ord. O99-29 § 1)~~

## ~~21A.45.120 Signs or displays of limited duration.~~

The following temporary signs or displays are permitted and, except as required by the International Building Code~~, Chapter 16.20~~; Chapter 16.20 SMC, Construction Administrative Code~~,~~; or as otherwise required in this chapter, do not require ~~building permits:~~a sign permit, subject to the requirements set out in this chapter. All temporary signs shall not obstruct sight distances and shall follow the regulations prescribed by Chapter 14.01 SMC, Public Works Standards Adopted, and by SMC 21A.25.220, Sight distance requirements. No temporary signs shall be located within center medians or within roundabouts, traffic circles, or islands. Temporary signs shall not be illuminated.

(1) ~~(1) Grand Opening~~Non-Commercial Temporary Signs.
No sign permit is required to post a non-commercial temporary sign in the public right-of-way or on private property if it meets the requirements in this section and in the following table. Non-commercial temporary signs not conforming to the regulations of this section may be approved through a right-of-way permit.

a) Non-commercial temporary signs may be placed between the sidewalk and the right-of-way line. On roads that only have a shoulder and do not have a sidewalk, non-commercial temporary signs must be placed a minimum of 3 feet from the edge of the asphalt.
b) Non-commercial temporary signs shall not be placed in the right-of-way within a 150-foot radius of the center of an intersection.
c) The City Engineer, in consultation with the director of public works or their designee, and following review of applicable state and city codes, may approve non-commercial temporary sign placement in the improved portion of the public right-of-way or within a 150-foot radius of the

center of an intersection provided that the location and sign characteristics will not present a traffic safety issue.

d) Non-commercial temporary signs shall not be placed in a manner that negatively affects the health of trees, shrubs, or other landscaping.

| | Non-Commercial Temporary Sign Type I – Placed in Public Right-of-Way (Non-A-Frame) | Non-Commercial Temporary Sign Type II – Placed in Public Right-of-Way (A-Frame) | Non-Commercial Temporary Sign Type III – Private Property (All Sign Types) (1) |
|---|---|---|---|
| Size Limit | 4 sq ft | 6 sq ft | 16 sq ft if located less than 50 feet from a street property line; 32 sq ft if located 50 feet or more from a street property line |
| Height Limit | 3 ft above grade | 3.5 ft | 8 ft |
| Duration | 180 consecutive days | 2 consecutive days | 180 consecutive days |

Development Conditions

1. Placement of off-premises non-commercial temporary signs on private property is subject to the landowner's authorization.

~~(1)~~(2) Temporary Commercial Displays~~.~~

~~(a)~~ Signs, posters, pennants, strings of lights, blinking lights, balloons, and searchlights are permitted for a period of up to ~~one month to announce the opening of a new enterprise or the opening of an enterprise under new management; and~~30 consecutive days once each calendar year at businesses located in Sammamish in the CB, NB, or O-Zones.

~~(b) All grand opening displays shall be removed upon the expiration of 30 consecutive days;~~

~~(2)~~(3) ~~(2)~~ Signs Located on Property with Active Construction ~~Signs.~~

~~(a) Construction signs identifying architects, engineers, planners, contractors, or other individuals or firms involved with the construction of a building and announcing the character of the building or the purpose for which the building is intended may be displayed;~~

(a) ~~(b)~~ One non-illuminated, double-faced sign is permitted for each public street upon which the project fronts;
(b) ~~(c)~~ No sign shall exceed 32 square feet in surface area or 10 feet in height, or be located closer than 30 feet from the property line of the adjoining property; and

~~(d) Construction signs~~Signs must be removed by the date of first occupancy of the premises or one year after placement of the sign, whichever occurs first~~;~~

(c) ~~(3) Political~~ .

(4) Signs~~. Political signs are~~ Associated with Properties for Sale or Rent

| | Signs Located On Property with Individual Unit for Sale or Rent |
|---|---|
| Sign Quantity | One per public street frontage |
| Permitted Location | Public street frontage |
| Permitted Duration | Signs shall be removed within five days after closing of the sale, lease or rental of the property. |
| Maximum Sign Area | 8 sq ft |
| Maximum Height | 6 ft |
| | Signs Located Off-Site of Property with Individual Unit for Sale or Rent (1) |
| Sign Quantity | One (2) |
| Permitted Location | Public right-of-way adjacent to the intersection of the primary vehicle entrance to the property and closest public street. |
| Permitted Duration | Signs shall be removed within five days after closing of the sale, lease or rental of the property. |
| Maximum Sign Area | 4 sq ft |
| | Portable Off-Premises Residential Directional Signs for Active Open Houses for Sale or Rent (3) |
| Maximum Sign Area | 6 sq ft |
| Maximum Height | 42 inches |
| | Signs on Property with Commercial or Industrial Property for Sale or Rent |
| Sign Quantity | One |
| Permitted Location | Public street frontage |
| Maximum Sign Area | 32 sq ft |
| Maximum Height | 12 ft |
| | Signs on Newly Constructed Residential Developments for Sale |
| Sign Quantity | One |
| Permitted Location | Public street frontage |
| Maximum Sign Area | 32 sq ft |
| Maximum Height | 12 ft |
| | Directional Signs Located Off-site Of Newly Constructed Residential Developments for Sale |
| Sign Quantity | Two |
| Permitted Location | Private property (with permission); public right-of-way |
| Maximum Sign Area | 16 sq ft |

Development Conditions

Only allowed~~, subject to the following requirements:~~

( for properties with a) Location.

(i) Political signs may be displayed on private property with the consent of the property owner;

(ii) Political signs may be displayed within public easements or streets; provided, that signs shall not be located within the center median of principal, minor, and collector arterials (as defined) or within roundabouts, traffic circles, or islands;

(iii) Political signs located pursuant to subsection (3)(a)(i) or (ii) of this section shall not obstruct sight distances as prescribed by Chapter 14.01 SMC, Public Works Standards Adopted, or by SMC 21A.25.220, Sight distance requirements.

(b) Specifications.

(i) Political signs located on private property may have a maximum sign area of up to 32 square feet;

(ii) Freestanding political signs on private property may be up to eight feet tall;

(iii) Political signs located on or within public easements or streets may have a maximum sign area of up to four square feet and may be up to three feet tall above grade;

(iv) Political signs located within 15 feet of a street corner or driveway, as further identified in Chapter 14.01 SMC, Public Works Standards Adopted, or by SMC 21A.25.220, Sight distance requirements, shall be further limited in sign area and height as necessary to satisfy sight distance limitations;

(c) Removal.

(i) Political signs shall be removed within seven days following the election;

(ii) Property owners shall be responsible for the removal of political signs located on private property;

(iii) The campaign officer or responsible official shall be responsible for the removal of political signs located on or within public easements or streets;

~~(4) Real Estate Signs. All temporary real estate signs may be single- or double-faced signs:~~

~~(a) Signs advertising an individual residential~~ unit for sale or rent ~~are allowed without city permits, subject to the following:~~

~~(i) Location.~~

~~(A) One on-site sign per street frontage;~~

~~(B) One off-site sign is allowed on private property or city street right-of-way between the effective date the ordinance codified in this section and December 31, 2010, subject to the following:~~

1. ~~(1) The individual residential unit or property for sale or rent~~ that is not located adjacent to a public street~~;~~.

~~(2) The off-site sign is located on private property or city street right-of-way, adjacent to the intersection of the primary vehicle entrance to the property and closest public street;~~

~~(3)~~ When more than three off-site real estate signs are proposed for a location, the fourth proposed sign owner shall install and make available to other licensed real estate agents a frame, designed to allow for a minimum of six signs to be hung in a stacked fashion, to accommodate multiple signs;

~~(4) Off-site real estate signage displayed on private property shall be with the consent of the property owner; and~~

~~(5) Signs located in the city street right-of-way shall be located outside of the improved portion of the right-of-way (behind the sidewalk, roadway shoulder, drainage ditch, etc., whichever is furthest from the traveled roadway), and may be removed by the city if determined to be a hazard or if the placement is otherwise in conflict with the public use of the right-of-way;~~

~~(C) All signs located on a street corner or driveway shall conform with Chapter~~ 14.01 ~~SMC, Public Works Standards Adopted, and SMC~~ 21A.25.220~~, Sight distance requirements.~~

~~(ii) Specifications.~~

~~(A) On-site signs shall not exceed eight square feet in area;~~

~~(B) On-site signs shall not exceed six feet in height;~~

~~(C) Individual off-site signs shall not exceed an area of four square feet;~~

~~(D)~~ Frames installed to hold multiple real estate signs shall not exceed a height of six feet~~;~~

~~(E) Off-site signs located on a frame shall be designed to allow for a minimum of six signs to be hung, in a stacked fashion;~~

~~(F) Real estate offices or individual realtors that are advertising the sale or lease of more than one property at a corner shall be limited to one sign; and~~

2. ~~(G)~~ . Off-site signs located on a frame shall individually not exceed a height of one and a half feet, a width of two feet, and an area of three square feet.

~~(iii) Removal.~~

~~(A) Signs shall be removed within five days after closing of the sale, lease or rental of the property.~~

~~(b) Portable off-premises residential directional signs announcing directions to an open house at a specified residence that is offered for sale or rent shall not exceed six square feet in area for each sign, and shall not exceed 42 inches in height.~~

3. Such signs shall be permitted only when the agent or seller is in attendance at the property for sale or rent and may be located on the right-of-way outside of vehicular and bicycle lanes.

~~(c) On-site commercial (nonresidential) or industrial property for sale or rent signs shall be limited to one sign per street frontage, and shall not exceed 32 square feet in area. The sign shall not exceed 12 feet in height. The sign shall be removed within five days after closing of the sale, lease or rental of the property. A building permit is required and shall be issued for a one-year period. The permit is renewable for one-year increments up to a maximum of three years.~~

~~(d) On-site residential development for sale or rent signs shall be limited to one sign per development. The sign shall not exceed 32 square feet in area, and shall not exceed 12 feet in height. A building permit is required and shall be issued for a one-year period. The permit is renewable annually for up to a maximum of three years.~~

~~(e) Off-site directional signs for residential developments shall be limited to six signs. Each sign shall not exceed 16 square feet in area, and shall include only the name of and directions to the residential development. The sign(s) shall be placed a maximum of two road miles from the nearest residential development entrance. No two signs for one residential development shall be located closer than 500 feet from one another on the same street. A single building permit is required for all signs and shall be issued for a one-year period. The permit number and the permit expiration date must be clearly displayed on the face of each sign. The permit is renewable for one-year increments up to a maximum of three years; provided, that extensions will only be granted if the sign permit applicant has complied with the applicable regulations.~~

~~(f) Residential on-premises informational signs shall be limited to one sign per feature, including but not limited to signs for information centers, model homes, parking areas or announcing features such as parks, playgrounds, or trails. Each sign shall not exceed 16 square feet in area, and shall not exceed six feet in height;~~

~~(5) Community Event Signs. Community event signs are allowed, subject to the following requirements:~~

~~(a) Location.~~

~~(i) Community event signs may be displayed on private property with the consent of the property owner.~~

~~(ii) Community event signs may be displayed within public easements or streets; provided, that:~~

~~(A) Signs shall be A-frame signs as specified in subsection (5)(b) of this section; and~~

~~(B) Signs shall not be located within the center median of principal, minor, and collector arterials (as defined) or within roundabouts, traffic circles or islands.~~

~~(iii) Community event signs located pursuant to subsection (5)(a)(i) or (ii) of this section shall not obstruct sight distances as prescribed by Chapter 14.01 SMC, Public Works Standards Adopted, or by SMC 21A.25.220, Sight distance requirements.~~

~~(iv) The director, in consultation with the City engineer, and following review of applicable state and City codes, may approve temporary sign placement in the public right-of-way on hardscape areas~~

~~(i.e., concrete pads or other sidewalk areas not used for pedestrian travel); provided, that sign location does not conflict with subsection (5)(a)(i) or (ii) of this section.~~

~~(b) Specifications.~~

~~(i) Community event signs on private property may have a maximum sign area of 32 square feet;~~

~~(ii) Community event signs on public easements or streets shall be "A-frame" signs that shall not exceed six square feet in area for each sign, and shall not exceed 42 inches in height;~~

~~(iii) Community event signs located within 15 feet of a street corner or driveway, as further identified in Chapter 14.01 SMC, Public Works Standards Adopted, or by SMC 21A.25.220, Sight distance requirements, shall be further limited in sign area and height as necessary to satisfy sight distance limitations; and~~

~~(iv) Community event signs shall be stationary and shall not be illuminated.~~

~~(c) Removal.~~

~~(i) Community event signs shall be removed within seven days following the end of the community fair, festival, or event; provided, that the signs shall not be displayed for more than a total of 21 calendar days; and~~

~~(ii) Sign removal shall be the responsibility of the event sponsor;~~

~~(6) Community Banners Sign. Community banners are allowed subject to the following provisions:~~

~~(a) Community banners shall only be located on public banner poles erected by the City for that use;~~

~~(b) Letters on the sign shall not be less than 12 inches in height except for lettering associated with sponsor logos;~~

~~(c) Banners shall not be illuminated or have any attention-getting lights; and~~

~~(d) Sponsor logos shall be limited to the name and corporate symbol of the sponsor.~~

~~(7) Fundraising Sign. Fundraising signs are allowed subject to the following provisions:~~

~~(a) Location.~~

~~(i) Fundraising signs may only be located on private property as follows:~~

~~(A) On any property zoned office (O), community business (CB), neighborhood business (NB), and Town Center A (TC-A); or~~

~~(B) On property with a residential zoning designation (R), where such property abuts a principal, minor, or collector arterial.~~

~~(ii) No more than one fundraising sign may be located on any one property;~~

~~(iii) Any fundraising sign authorized located on a street corner or driveway shall conform to Chapter 14.01 SMC, Public Works Standards, and SMC 21A.25.220, Sight distance requirements; and~~

~~(iv) All signs shall be located on private property with the written permission of the property owner.~~

~~(b) Specifications. Fundraising signs may be attached to a wall or be freestanding signs subject to the following design specifications:~~

~~(i) Fundraising signs located on property zoned O, CB, NB, and TC-A shall be limited to a maximum area of 32 square feet;~~

~~(ii) Fundraising signs located on property zoned residential (R):~~

~~(A) Shall be limited to a maximum area of 16 square feet if located less than 50 feet from a street property line; and~~

~~(B) Shall be limited to a maximum area of 32 square feet if located 50 feet or more from a street property line;~~

~~(iii) Signs shall not be illuminated;~~

~~(iv) Freestanding signs shall not exceed a height of eight feet;~~

~~(v) All signs shall be constructed of a solid opaque material; and~~

~~(vi) Freestanding signs shall be located outside of required zoning setbacks.~~

~~(c) Removal.~~

~~(i) A permit is required and shall be issued for a six-month period. The permit number and the permit expiration date must be clearly displayed on the face of each sign. The permit may be renewed upon payment of the required fee and subject to further review and approval under the requirements of this section;~~

~~(ii) Removal of the fundraising sign is the responsibility of the property owner and/or applicant. (Ord. O2011-305 § 1 (Att. A); Ord. O2009-258 § 1 (Att. A); Ord. O2009-249 § 1; O2005-180 § 1; Ord. O99-29 § 1)~~

## ~~Article II. Electronic Reader Board Pilot Program~~

### ~~21A.45.130 Pilot program established – Applicability.~~

~~A pilot program is hereby established to allow high schools located on the east side of 228th Avenue, between the intersections of SE 13th Way and 228th Avenue SE and NE 8th Street and 228th Avenue NE, to install one freestanding electronic reader board sign as provided in this article. (Ord. O2009-266 § 1)~~

### ~~21A.45.140 Definition of electronic reader board sign.~~

~~For the purposes of this article, "electronic reader board sign" means an electronically controlled sign that contains temporary text messages that can be changed from time to time. (Ord. O2009-266 § 2)~~

### ~~21A.45.150 Location of electronic reader board signs.~~

~~Any electronic reader board sign located on a street corner or driveway shall conform with Chapter 14.01 SMC, Public Works Standards Adopted, and SMC 21A.25.220, Sight distance requirements. (Ord. O2009-266 § 3)~~

### ~~21A.45.160 Specifications of electronic reader board signs.~~

~~Electronic reader board signs authorized by this article may be attached to the school wall or be freestanding signs, subject to the following design specifications:~~

~~(1) All signs shall be limited to an area of 32 square feet;~~

~~(2) Freestanding signs shall not exceed a height of 10 feet;~~

~~(3) Signs shall be designed to prevent light and glare from being visible to adjacent residential properties;~~

~~(4) Signs shall automatically dim during hours of darkness;~~

~~(5) Signs shall be turned off between the hours of 10:00 p.m. and 6:00 a.m. except during emergencies;~~

~~(6) Signs shall not contain moving graphics, text, or video;~~

~~(7) Sign messages shall not change more than once every 60 seconds;~~

~~(8) The interval between successive messages shall be zero seconds;~~

~~(9) Message sequencing is prohibited;~~

~~(10) Telephone numbers, website addresses, and instructions are prohibited;~~

~~(11) Letter height on the signs shall be between 10 and 24 inches;~~

~~(12) Freestanding signs shall be located within 50 feet of the school entrance on 228th Avenue;~~

~~(13) Sign messages shall be limited to providing school-related information, announcing or promoting a school or community fair, festival, event, or in the case of emergencies, emergency information; and~~

~~(14) If the City public works department determines that a sign constitutes a health and safety hazard, additional conditions may be imposed to address the hazard(s). (Ord. O2009-266 § 4)~~

## ~~21A.45.170 Pilot program monitoring.~~ SHARE

~~The department of community development shall monitor the effect of any sign installed pursuant to the provisions of this pilot program. Such monitoring may include tracking any increase in traffic incidents, citizen comments or complaints, and any other information related to the viability of long-term authorization of the electronic signs. (Ord. O2009-266 § 5)~~

## ~~21A.45.180 Duration of pilot program.~~ SHARE

~~The duration of the pilot program shall be five years from the effective date of the ordinance codified in this article, or as otherwise may be established by City council. Electronic reader board signs constructed in compliance with this article shall be considered legally established, nonconforming signs subject to the provisions of Chapter 21A.70 SMC. (Ord. O2009-266 § 6)~~

**21A.45.080 Legal non-conforming signs**

(1) Any sign located within the city limits on the date of adoption of the ordinance codified in this title, or located in an area annexed to the city thereafter, which does not conform with the provisions of this code, shall be considered a legal nonconforming sign and is permitted, provided it also meets the following requirements:
   a) The sign was covered by a permit on the date of adoption of the ordinance codified in this title if one was required under applicable law; or
   b) If no permit was required under applicable law for the sign in question, the sign was in all respects compliant with applicable law on the date of adoption of the ordinance codified in this title.

(2) Loss of Legal Nonconforming Status.

Nonconforming signs shall not be altered in size, shape, height, location, or structural components without being brought to compliance with the requirements of this code. Repair and maintenance are allowable, but may require a permit if structural components require repair or replacement.

**21A.45.090 Variance**

(1) A sign variance is categorized as a Type 1 land use application and shall be subject to the requirements of SMC 21A.110.030. Variances from the terms of this chapter may be granted by Director of Community Development upon proper application. Variances may be granted when, because of unique circumstances applicable to the property, including size, shape, topography, location, or surroundings, the strict interpretation of the regulations of this chapter deprives such property of privileges enjoyed by other property in the vicinity and under identical zoning classifications.

(2) The variance shall not constitute a grant of special privilege inconsistent with a limitation upon uses of other properties in the vicinity and zone in which such property is situated.

**21A.45.100 – Enforcement**

(1) Compliance with other applicable codes.
All signs erected or altered under this chapter must comply with all applicable federal, state and local regulations relating to signs, including without limitation the provisions of the International Building Code as adopted in SMC 16.05.010 by the city. If any provision of this code is found to be in conflict with any provision of any zoning, building, fire, safety or health ordinance or code of the city, the provision which establishes the higher standard shall prevail.

(2) Sign maintenance.
All permanent and temporary signs must be kept in good repair and in a safe manner at all times. The sign owner must repair damaged or deteriorated signs within 30 days of notification by the City. The area surrounding freestanding signs must be kept free of litter and debris at all times.

(3) Inspection.
Code enforcement officers are authorized to inspect any sign covered by this chapter for the purpose of inspection of the sign, its structural and electrical connections, and to ensure compliance with the provisions of this code. Such inspections shall be carried out during business hours, unless an

emergency exists.

(4) Abatement.
In addition to the abatement authority provided by proceedings under SMC 21A.115.030, the City or its agents may summarily remove any sign placed on a right-of-way or public property in violation of the terms of this chapter under the following circumstances:

(a) When a sign is determined by the City Engineer or Director of Community Development to present an immediate threat to the safety, health, and welfare of the public;

(b) When a sign is illegally placed within the public right-of-way, within a landscape median, landscape island, traffic circle, attached to a utility pole or city traffic sign, upon public sidewalks or roadway, or on any public building or structure when such facilities are located on public property or within public right-of-way;

(c) When a sign is determined by the City to be abandoned; provided, that the city must first provide fourteen days' notice to the underlying property owner or business owner that the sign is deemed abandoned;

(d) Disposal of Signs. When a sign has been removed by the City as authorized by this section, the City shall take the following actions:

i. The City shall hold a sign for at least seven days. After seven days the City may dispose of the sign without prior notice to the sign owner. The City shall not be responsible for damage or loss during removal or storage of any signs in violation of this code. Sign owners wishing to reacquire possession of removed signs prior to their disposal shall pay an impoundment fee pursuant to SMC 23.100.010.

ii. For signs with a fair market value exceeding five hundred dollars, the City shall provide notice by mail to the following:

A. Sign Owner. If the mailing address can be determined by the City after reasonable efforts in investigation. "Reasonable efforts" shall include investigation efforts that take no longer than one-half hour of staff time.

B. Underlying Property Owner. If the address of the sign owner cannot be reasonably ascertained, the City shall mail the notice to the underlying real property owner, as identified in the records of the King County Assessor's Office.

**23.100.010 Assessment schedule**

| Code Enforcement Penalties: | |
|---|---|
| Infraction | up to $500 |
| Stop Work Order | up to $500 |
| Noncompliance: | |

| | |
|---|---|
| 1 – 15 days | $100 up to $250 per day |
| 16 – 31 days | $250 up to $500 per day |
| 31+ days | $500 up to $1,000 per day (up to $50,000 maximum) |
| Environmental Damage/Critical Areas Violations: | |
| Up to $25,000 plus the cost of restoration. | |
| Unlawful Tree Removal or Damage: | |
| $1,500 per inch of diameter at breast height of tree removed or damaged. | |
| $25 fee per sign illegally placed on public property or in the City's right-of-way. | |

## Chapter 21B.15

## TECHNICAL TERMS AND LAND USE DEFINITIONS

**[…]**

**21B.15.341 Sign.**
"Sign" means any medium, device, structure, fixture, or placard, including any necessary supporting structure and component parts, that is visible from a public right-of-way or surrounding properties, and uses graphics, symbols, or written copy to convey a message, attract attention to, or advertise a product, place, activity, business, event, good, service, or land use.

**21B.15.341.1 Sign, A-Frame.**
"Sign, A-frame" means a freestanding 2-panel foldable, portable temporary sign made of rigid material.

**21B.15.342 Sign, awning/marquee.**
"Sign, awning/marquee" means a sign painted on or attached directly to and supported by an awning or marquee. An awning may be constructed of rigid or nonrigid materials and may be retractable or nonretractable. A marquee is a roof-like shelter, as of glass, projecting above an outer door and over a

sidewalk or a terrace, which may be attached to a building or be freestanding.

**21B.15.343 Sign, blade.**
"Sign, blade" means a small, pedestrian-oriented building-mounted sign that is attached to and supported by the exterior wall of a building with the exposed face of the sign on a plane perpendicular to the wall of the building, projecting more than one foot from the wall of a building and vertical to the ground.

**Figure 21B.15.343. Blade sign examples.**

**21B.15.344 Sign, box/cabinet.**
"Sign, box/cabinet" means a building-mounted sign that is attached to and supported by the exterior wall of a building with the exposed face of the sign on a plane parallel to the wall of the building and where the sign or individual letters are contained within a box or cabinet and are internally illuminated.

**Figure 21B.15.344. Cabinet sign examples.**

**21B.15.345 Sign, building-mounted.**
"Sign, building-mounted" means a sign that is attached directly to a building or indirectly attached to a building by a support structure. Building-mounted signs may include, but are not limited to, wall, hanging, blade, awning, marquee, opaque, channel, painted, shadow, and window signs.

**21B.15.346 Sign, changing message.**
"Sign, changing message" means a sign that contains electronically controlled digital or illuminated text, or a sign that contains text that can be manually changed.

**Figure 21B.15.347. Changing message sign examples.**

**21B.15.347 Sign, channel letter.**
"Sign, channel letter" means a wall sign that is comprised of lettering that is attached to and supported by the exterior wall of a building or a structure with the exposed face of the lettering or graphics on a plane

parallel to the wall of the building, and where the letters contain an open channel into which neon lighting is inserted.

**Figure 21B.15.348. Channel letter sign examples.**

**21B.15.348 Sign, community banner.**
"Sign, community banner" means a temporary sign, located on City banner poles, which advertises a City-sponsored or hosted event.

**21B.15.349 Sign, directional.**
"Sign, directional" means a sign that is primarily designed to guide or direct pedestrian or vehicular traffic to an area, business, place, or convenience, and may include incidental graphics such as trade names and trademarks.

**Figure 21B.15.349.1. Directional sign examples.**

**21B.15.349.1 Sign, hanging.**
"Sign, hanging" means a small, pedestrian-oriented sign that is hung beneath an awning, canopy, or marquee sign or other structure.

**Figure 21B.15.349.2, Hanging sign examples.**

**21B.15.349.2 Sign, incidental.**
"Sign, incidental" means a sign, emblem or decal designed to inform the public of goods, facilities, or services available on the premises, and may include but not be limited to signs designating:

(a) Restrooms;
(b) Hours of operation;
(c) Acceptable credit cards;
(d) Property ownership or management;
(e) Phone booths; and
(f) Recycling containers.

**21B.15.349.3 Sign, freestanding.**
"Sign, freestanding" means a sign standing directly upon the ground or having one or more supports standing directly upon the ground, and being detached from any building or fence.

**21B.15.349.4 Sign, fuel price.**
"Sign, fuel price" means a sign utilized to advertise the price of gasoline and/or diesel fuel.

**21B.15.349.5 Sign, logo.**
"Sign, logo" means a sign, graphic representation, or symbol of a company name, trademark, or abbreviation, uniquely designed for ready recognition. A logo sign may be a wall sign or a freestanding sign.

**21B.15.349.6 Sign, monument.**
"Sign, monument" means a freestanding sign that is above ground level and is anchored to the ground by a solid base, with no open space between the sign and the ground.

**21B.15.349.7 Sign, opaque.**
"Sign, opaque" means a building-mounted sign that is attached to and supported by the exterior wall of a building or a structure where the surface of the sign is generally comprised of two or more opaque

materials on the same plane. Where internally illuminated, the opaque material that comprises the lettering of the sign may be translucent such that it allows limited light to shine through the sign letters.

**Figure 21B.15.349.8, Opaque sign examples.**

**21B.15.349.8 Sign, painted.**
"Sign, painted" means a sign, mural or graphic design painted directly onto a building facade or onto a flat wood or metal surface that is then attached to the building facade.

**Figure 21B.15.349.9, Painted sign examples.**

**21B.15.349.9 Sign, permanent residential development identification.**
"Sign, permanent residential development identification" means a permanent sign identifying the residential development upon which the sign is located.

**21B.15.349.10 Sign, pedestal.**
"Sign, pedestal" means a temporary, pedestrian-oriented sign placed atop a pedestal that is affixed to a heavy horizontal base.

**Figure 21B.15.349.11, Pedestal sign examples.**

**21B.15.349.11 Sign, primary.**
"Sign, primary" means a painted, opaque, awning, marquee, or channel letter sign that is designed to be the primary source of business identification to both pedestrian and vehicular traffic.

**21B.15.349.12 Sign, secondary.**
"Sign, secondary" means a window, logo, blade, or hanging sign that generally contains secondary, pedestrian-oriented business identification, business product information, or hours of operation.

**21B.15.349.13 Sign, shadow.**
(24) "Sign, shadow" means a wall sign comprised of individual letters or graphics that is attached to and supported by the exterior wall of a building with the exposed face of the sign lettering or graphics on a plane parallel to the wall of the building, where the surface of the sign is generally comprised of a

completely opaque material. The sign lettering or graphics are separated from the building facade such that during daylight hours the lettering generates a shadow on the building facade.

**Figure 21B.15.349.14. Shadow sign examples.**

**21B.15.349.14 Sign, temporary.**
"Sign, temporary" means a sign that is designed to be displayed for a limited amount of time and is not permanently placed or affixed such as to prevent its removal;

**21B.15.349.15 Sign, window.**
"Sign, window" means a sign that is constructed of neon, stained glass, gold leaf, cut vinyl, etched glass, or similar material in a window.

**21B.15.349.16 Sign, wall.**
"Sign, wall" means any sign painted on, or attached directly to and supported by, the wall of a building or structure. All wall signs are building-mounted signs. Wall signs may include, but are not limited to, window, opaque, shadow, painted, channel letter, and logo signs. (Ord. O2010-293 § 1 (Att. A))

## Chapter 21B.45

## SIGNAGE

Sections:

~~21B.45.010~~ 21B.45.010 Purpose and intent.

~~21B.45.020 Applicability.~~

~~21B.45.030 Permit required.~~

~~21B.45.040~~ 21B.45.020 Applicability.

21B.45.030 Permit required.

21B.45.040 Application information.

~~21B.45.050 Prohibited signs.~~

~~21B.45.060 Exempt signs.~~

~~21B.45.070~~ 21B.45.050 Prohibited signs.

21B.45.060 Exempt signs.

21B.45.070 Interpretation of tables and design standards.

~~21B.45.080~~ 21B.45.080 Table of allowed sign types and design review.

~~21B.45.090~~ 21B.45.090 Review and modifications to standards.

~~21B.45.100 Measurement methods.~~

~~21B.45.110~~ 21B.45.100 Sign area calculation.

21B.45.110 General sign design standards.

~~21B.45.120~~ 21B.45.120 Design standards for specific sign types.

~~21B.45.130 Community bulletin board signs.~~

~~21B.45.140 Compatibility and design review.~~

~~21B.45.150 Temporary signs.~~

~~21B.45.160 Compliance clause.~~

~~21B.45.170 Electronic reader board pilot program adopted.~~

~~21B.45.180 Definitions.~~

21B.45.130 Design and compatibility review.

21B.45.140 Temporary signs.

21B.45.150 Legal non-conforming signs.

21B.45.160 Variance.

21B.45.170 Enforcement.

**21B.45.010 Purpose and intent.**

The purpose of this chapter is to enhance and protect the economic vitality and visual environment of the Town Center ~~sign code chapter is to:~~, allow for the expression of free speech, and promote general safety and welfare by:

(1) Regulating the type, number, location, size, and illumination of signs; and

(2) Recognizing the purpose of signs for identification and economic well-being of businesses in the Town Center by supporting a full range of signs necessary for commercial services in the Town Center; and

(3) Ensuring a safe driving environment; and

(4) Recognizing and protecting the use of the public right-of-way as a forum for non-commercial

speech; and

(5) Facilitating fair and consistent content-neutral enforcement; and

(6) Safeguarding and enhancing property values, attracting new residents, and encouraging orderly development; and

(7) Allowing for limited temporary commercial signage in the public right of way to provide commercial information to consumers to enable them to make vital decision of purchasing a home, and to further the critical public goal of providing for equal access to housing; and

(8) Upholding the goals and policies of the Sammamish Comprehensive Plan and the Town Center Subarea Plan.

(9)~~(1) Promote~~ Promoting signs within the Town Center that contribute to the character of the Town Center, are integrated with natural surroundings and landscaping, and exhibit an intimate human scale;

~~(2) Provide~~(10) Providing necessary signage to support central gathering places, increase social interaction, and encourage walkability;

~~(3) Support a full range of signs necessary to support commercial services in the Town Center;~~

~~(4) Regulate~~(11) Regulating signs in a manner that is timely, flexible, predictable, fair to all and that results in superior development; and

(~~5) Create~~12) Creating a ~~"sense of place"~~vibrant and inviting commercial node that is reflected in the character and design of Town Center ~~signs~~signage. (Ord. O2010-293 §~~-~~ 1 (Att. A))

**21B.45.020~~-~~ ___Applicability.**

Except as provided for in SMC ~~21B.45.060,~~ 21B.45.060, Exempt signs, all signs shall be subject to the design provisions of this chapter; provided, that specific sign standards and design requirements may be further established through a unified zone development plan ~~or building permit review~~ and shall be ~~determined during~~established through the ~~applicable review process.~~unified zone development plan approval, pursuant to . (Ord. O2010-293 §~~-~~ 1 (Att. A))

**21B.45.030~~-~~ ___Permit required.**

(1)~~-~~ Except as otherwise ~~permitted~~provided in by this chapter, no sign shall be erected, altered, or relocated within the Town Center without ~~approval~~a permit issued by the ~~director~~City.

(2)~~-~~ No ~~building~~ permit shall be required for repainting in like colors, cleaning, or other normal maintenance and repair of a permitted sign, ~~including replacement~~or of ~~portions of the~~ sign face and copy changes that do not alter the size or structure of the sign or compliance with the design standards. (Ord. O2010-293 §~~-~~ 1 (Att. A))

**21B.45.040~~-~~ ___Application information.**

The applicant shall have the burden of demonstrating that a proposed sign(s) complies with this chapter as follows:

(1)~~-~~ All new signs requiring a permit or approval pursuant to SMC ~~21B.45.030~~ 21B.45.030 shall provide, in a form established by the City, at a minimum an accurate plan with complete dimensions, location, size, color, shape, materials, type of illumination, size and style of lettering, copy design and the proposed manner of installation. Additional information may be required as reasonably necessary for approval by the director.

(2)~~-~~ The size and location of every existing sign on the premises shall be noted ~~on the application form~~.

(3)~~-~~ If a unified ~~site~~zone development plan was previously approved by the City and included sign approvals, an applicant whose sign conforms to that plan may refer to it in the application and may omit detailed drawings unless specifically requested to provide them.

(4) If design and compatibility ~~and design~~ review is required pursuant to SMC 21B.45.080, the applicant shall submit a compatibility analysis addressing the design criteria enumerated in SMC ~~21B.45.140, Compatibility~~ 21B.45.130, Design and ~~design~~compatibility review. (Ord. O2010-293 § 1 (Att. A))

**21B.45.050 Prohibited signs.**
Except as indicated by this chapter, the following signs or displays are prohibited:

~~Except as indicated by this chapter, the following signs or displays are prohibited:~~

(1) Any sign that is otherwise allowed, but does not comply with the provisions of this chapter;

(2) Signs attached to a fence;

(3) Signs which, by reason of their size, location, movement, content, coloring, or manner of illumination, may be confused with traffic control signs or signals;

(4) Temporary signs except as specifically allowed in SMC ~~21B.45.150;~~ 21B.45.140;

(5) Except as specifically allowed, signs located in the public right-of-way, or within travel lanes or sidewalks, or attached to traffic control signs, utility or signal poles;

(6) Changing message center signs or signs containing moving graphics, text, or video, or that are flashing, moving, rotating, animated, or inflated~~, except as allowed pursuant to SMC 21B.45.130, Community bulletin board signs, or as part of the pilot program established pursuant to Ordinance O2009-266~~;

(7) A sign that extends higher than the peak of the roof, ridge line, or parapet of a building to which it is attached;

(8) Visible ballast boxes or other sign equipment;

(9) Posters, pennants, strings of lights, moving/flashing/blinking lights, balloons, searchlights, exposed electrical conduits, and other displays of a carnival nature, except on a limited basis as ~~seasonal decorations or as~~ provided for in SMC ~~21B.45.150 as grand opening~~ 21B.45.140 as temporary business displays;

(10) Box or cabinet signs;

(11) Pole-mounted freestanding signs;

(12) Roof-mounted signs; and

(13) Billboards. (Ord. O2010-293 § 1 (Att. A))

**21B.45.060 Exempt signs.**
The following signs or displays are exempted from the regulations under this chapter:

~~**Exempt signs.**~~
~~The following signs or displays are exempted from the regulations under this chapter:~~

(1) Historic ~~site markers or~~ plaques not exceeding 3 square feet in area, and address numbers;

(2) ~~Signs required by law, including but not limited to:~~

~~(a)~~ Official or legal notices issued and posted by any public agency or court; ~~or~~

~~(b) Traffic directional or warning signs;~~

~~(3)~~ (3) Traffic control signs established by the Manual on Uniform Traffic Control Devices (MUTCD) or authorized by City of Sammamish Department of Public Works;

(3) Plaques, tablets, or ~~inscriptions indicating the name of a building, date of erection, or other commemorative information, which are an integral part of the building structure or~~, which are attached flat to the face of the building, which are nonilluminated, and which do not exceed four square feet in surface area;

(4) Incidental signs, which shall not exceed two square feet in surface area; provided, that said size limitation shall not apply to signs providing directions, warnings, or information when established and maintained by a public agency;

(5) ~~State or federal~~ Government flags; and

(6) ~~Religious~~ Nonverbal religious symbols~~; and~~

~~(7) The flag~~ attached to a place of ~~a commercial institution, provided no more than one flag is permitted per business premises; and further provided the flag does not exceed 20 square feet in surface area. (Ord. O2010-293 § 1 (Att. A))~~worship.

(Ord. O2010-293 § 1 (Att. A))

**21B.45.070 Interpretation of tables and design standards.**
~~(1) SMC 21B.45.080~~ (1) SMC 21B.45.080 determines whether a specific sign type is allowed in a zone district. The zone district and the public right-of-way are identified in the vertical column and the specific sign type is located on the horizontal row of these tables.

(2) If no symbol appears in the box at the intersection of the column and the row, the sign type is not allowed in that district, except for certain signs allowed pursuant to SMC ~~21B.45.150,~~ 21B.45.140, Temporary signs.

(3) ~~All reviews are~~ The review of all sign permit applications is administrative, and shall be conducted by the director of community development, subject to the review requirements identified below.

(4) If the number "1" appears in the box at the intersection of the column and the row, the sign type is allowed in that district subject to the sign design standards specified in SMC ~~21B.45.110, 21B.45.120,~~ 21B.45.110, 21B.45.120, and the general requirements of the code.

(5) If the number "2" appears in the box at the intersection of the column and the row, the sign type is allowed subject to the sign design standards, general requirements, and the Design and compatibility ~~and design~~ review specified in SMC ~~21B.45.140.~~ 21B.45.130. (Ord. O2010-293 § 1 (Att. A))

**21B.45.080 Table of allowed sign types and design review.**
(1) Table of Allowed Sign Types and Design Review for Town Center Zones.

| | TOWN CENTER ZONES | | | | | |
|---|---|---|---|---|---|---|
| **Sign Types** | **ROW** | **TC-A** | **TC-B** | **TC-C** | **TC-D** | **TC-E** |
| Building-Mounted Signs: | | | | | | |
| Blade | 2(~~a~~1) | 1 | 2 | 2 | 2 | 2 |
| Opaque/Painted | | 2 | 2 | 2 | 2 | 2 |
| Channel Letter/Shadow | | 2 | 2 | | | |
| Hanging | | 1 | 2 | | | |

| | TOWN CENTER ZONES | | | | | |
|---|---|---|---|---|---|---|
| **Sign Types** | **ROW** | **TC-A** | **TC-B** | **TC-C** | **TC-D** | **TC-E** |
| Marquee/Awning | | 2 | 2 | | | |
| Window | | 1 | 2 | | | |
| Freestanding Signs: | | | | | | |
| Community Banner | 1 | | | | | |
| Directional (Pedestrian) | 2 | 1 | 1 | 1 | 1 | 1 |
| Directional (Vehicle) | 2 | 1 | 1 | 1 | 1 | 1 |
| Monument | | 2(~~b~~2) | 2 | 2 | 2 | 2 |
| Changing Message Center | | | | | 2~~(c)~~ | |

~~(2) Sign~~
Development Conditions~~.~~

(~~a)~~ 1) Only allowed as part of a unified zone development plan application approved pursuant to Chapter 21B.95 SMC; and provided, that no sign shall extend into the vehicle travel lanes.

(~~b)~~ 2) Only allowed in the TC-A-4 and in the TC-A-5 zones.

~~(c) Also subject to the community bulletin board standards of SMC 21B.45.130.~~ (Ord. O2010-293 § 1 (Att. A))

**21B.45.090 Review and modifications to standards.**
(1) All sign permits shall be approved administratively ~~as part of building permit review~~, subject to the permit review requirements of Chapter 20.05 SMC; provided, that:

(a) Signs subject to the Level 1 sign review shall be reviewed for compliance with this chapter but shall not be subject to the provisions of SMC ~~21B.45.140, Compatibility and design~~ 21B.45.130, Design and compatibility review;

(b) Signs subject to the Level 2 ~~review~~Design and Compatibility Review requirements shall be reviewed for compliance with this chapter, including the provisions of SMC ~~21B.45.140, Compatibility and design~~ 21B.45.130, Design and compatibility review;

(2) Sign design may be reviewed and approved as part of a unified ~~site~~zone development plan review consistent with Chapter 21B.95 SMC, provided:

(a) Specific sign designs approved as part of a unified ~~site~~zone development plan will require a ~~building~~sign permit, but will not require additional design review at the time of ~~building~~ permit application when in accordance with the approved unified ~~site~~zone development plan; or

(b) Additional design standards and guidelines may be adopted through the review process, subject to specific design review of signs at the time of building permit application. Additional design standards and guidelines adopted through the review process shall govern all subsequent sign design reviews including replacement signs.

(3) The director may approve applicant-proposed modifications of up to ~~50~~25 percent of the sign area, height, width, and other dimensional standards as part of the Level 2 ~~design~~Design and ~~compatibility review~~Compatibility Review process ~~(, pursuant to~~ SMC ~~21B.45.140);~~ 21B.45.130; provided, that any such approval shall be based upon an overall sign concept that is integrated with the building and is consistent

with the ~~purpose of SMC 21B.45.140, Compatibility and design review. The director shall not approve applicant~~goals of SMC 21B.45.130, Design and Compatibility Review. Applicant-proposed modifications to the number of signs allowed, illumination standards, the types of signs allowed, or sign modifications that would result in a sign that is not designed consistent with this purpose of this chapter shall not be considered; and

(4) Applicants proposing a sign that ~~would normally be~~is subject to the Level 1 basic sign review may choose to request a Level 2 ~~design sign review~~Design and Compatibility Review in order to take advantage of the director's ability to modify sign standards~~.~~, pursuant to SMC 21B.45.090(3). (Ord. O2010-293 § 1 (Att. A))

**21B.45.100** ~~Measurement methods.~~

~~(1)~~ **Sign area calculation.**

(1) Sign area shall be calculated as follows:

(a) Sign area for nonmonument freestanding signs shall be calculated by determining the total surface area of the sign as viewed from any single vantage point, excluding support structures.

(b) Sign area for pole signs shall be calculated by determining the total surface area of the sign as viewed from any single vantage point, excluding support structures.

~~(b)~~(c) Sign area for letters or symbols painted or mounted directly on walls or monument signs or on the sloping portion of a roof shall be calculated by measuring the smallest single rectangle that will enclose the combined letters~~, graphics,~~ and symbols.

~~(2) Sign Maximum Height.~~

(d) ~~(a)~~ Sign area for signs contained entirely within a cabinet and mounted on a wall, roof, or monument shall be calculated by measuring the entire area of the cabinet.

(2) maximum sign height.

(a) For a freestanding sign, the vertical distance measured from the ~~curb grade~~surface of the ~~nearest street~~ground to the highest point of the sign or sign structure; and

(b) For a building-mounted sign, the vertical distance measured from the building grade to the highest point of the sign or structure designed to support a sign.

(3) Sign clearance is measured from the surface of the ground to the lowest portion of the sign structure.

(4) Area of building ~~facade~~façade is calculated by multiplying the width of the building, or tenant space associated with the commercial use, by the height of the building or tenant space.

(5) The lineal feet of building ~~facade~~façade is calculated by measuring the width of the building or tenant space associated with the commercial use. Building modulation(s) are not included in the lineal feet of building ~~facade~~façade. (Ord. O2010-293 § 1 (Att. A))

**21B.45.110 General sign design standards.**

~~Pictures and figures included in each subsection below are intended to illustrate part or all of the design requirements and limitations discussed in the subsection containing each picture. Care has been taken to ensure that the pictures are consistent with the standards. However, where the picture includes features that are not consistent with design standards contained within the written standard, the written standard prevails.~~

(1) General Requirements.

(a) All signs shall be constructed primarily of nonreflective materials;

(b) Building-mounted sign frames and other support structures shall be concealed or integrated into the building's architectural character in terms of form, color, and materials such that they are not easily visible;

(c) Building-mounted signs must be in proportion to the size and design of the architectural features of the building ~~facade (see pictures contained in SMC 21B.45.140, Compatibility and design review);~~façade;

(d) All signs, except directional signs and community banners, shall be on-premises signs;

(e) Maximum height for building-mounted signs shall not extend above the highest exterior wall upon which the sign is located; provided, that blade signs shall not exceed the roofline of the building along the ~~facade~~façade that the blade sign is attached to;

(f) Total sign area for primary and secondary wall signs associated with uses occupying the ground level of a building shall not exceed 10 percent of the ground-level building ~~facade~~façade associated with the sign; provided~~,~~ that ~~no single~~there is a minimum allowed sign ~~shall exceed an~~ area of ~~24~~10 square feet and a maximum allowed sign area of 320 square feet;

(g) Total sign area for primary and secondary wall signs associated with uses that do not occupy the ground level of a building (e.g., the use is on the second or third story) shall not exceed five percent of the building ~~facade~~façade associated with the use; ~~provided, that no single sign shall exceed an area of 20 square feet;~~

(h) Tenants are allowed one primary sign regulated by this chapter per building ~~facade~~façade that contains a public entry (open during all business hours), up to a maximum of two ~~facades~~façades;

(i) Tenants are allowed three secondary signs regulated by this chapter per building ~~facade~~façade that contains a public entry (open during all business hours);

(j) Wall sign width shall not exceed a width of two-thirds of the lineal width of the building ~~facade~~façade associated with the sign;

(k) Signs shall not cover windows, building trim, or architectural ornamentation~~;~~.

No (Sign too high, internal illumination)

~~**Figure 21B.45.110a. Acceptable and unacceptable sign examples.**~~

(2) Illumination. Signs may be illuminated as follows:

(a) Illumination shall be limited to indirect lighting unless otherwise specifically allowed by the specific sign type design standards; provided, that no sign may be both internally and indirectly illuminated;

(b) Indirect sign illumination shall be no further away from the sign than the height of the sign;

(c) Externally illuminated signs shall be arranged so that no direct rays of light are projected from such artificial source into residences or any street right-of-way;

(d) External sign light fixtures shall complement the design of the sign and building ~~facades~~façades or structures associated with the sign;

(e) External sign lighting shall be “full cutoff” and shall not result in direct illumination of the sky and adjacent properties and structures, and shall be designed to minimize reflected glare to adjacent properties and structures;

(f) Sign illumination shall automatically turn off within one hour of the close of the business, use, or activity; and

(g) Additional illumination standards may be contained in SMC ~~21B.45.120,~~ 21B.45.120, Design standards for specific sign types, or adopted through the approval of a unified zone application pursuant to Chapter 21B.95 SMC.

Yes

Yes

No (internal illumination, glare to adjacent properties)

Yes

Yes

No (Fixtures do not complement design of building)

~~Figure 21B.45.110b. Acceptable and unacceptable sign examples.~~

(3) Location. All signs shall be located as follows:

(a) Building-Mounted Signs.

(i) Shall be attached to the building ~~facade~~façade of the business or commercial enterprise they are advertising;

(ii) Shall be located on the same floor as the business or commercial enterprise they are advertising; provided, that businesses that occupy more than one floor shall place the sign on the lowest floor occupied by the business;

(iii) Shall not exceed a height of 15 feet above grade if associated with a business located on the bottom floor of a building;

(iv) Shall not conflict with the ability to view any other sign associated with the building to which the sign is attached;

(v) Shall not conflict with vehicle travel lanes if blade or hanging signs extend into the street right-of-way as otherwise allowed by the City; and

(vi) May extend over the sidewalk if they are hanging or blade signs otherwise approved by the City.

(b) Freestanding Signs.

(i) May be located on private property with the consent of the private property owner, unless otherwise allowed in this chapter;

(ii) May be located in the public right-of-way ~~subject~~pursuant to ~~the table of allowed sign types and design review (SMC 21B.45.080)~~SMC21B.45.080(1) and with the written approval by the City of Sammamish;

(iii) Located on private property shall be no further than five feet from the street; and

(iv) Shall not obstruct sight distances as prescribed by Chapter 14.01 SMC, Public Works Standards Adopted, or by SMC 21B.25.200, Sight distance requirements.

(4) Sign Standards along 228th Avenue SE.

(a) The only signs visible from 228th Avenue SE shall be either monument signs no taller than six feet above grade or wall signs less than 30 square feet or 18 inches multiplied by the length of the front ~~facade~~façade measured parallel to 228th Avenue SE (whichever is smaller);

(b) Except for wall signs on pedestrian-oriented ~~facades~~façades built up to the sidewalk, all signs visible from 228th Avenue SE are limited to signs that advertise a commercial node or group of businesses rather than a single business; and

(c) For other design standards, see Chapter 21B.30 SMC. (Ord. O2010-293 § 1 (Att. A))

**21B.45.120 Design standards for specific sign types.**

~~Pictures and figures included in each subsection below are intended to illustrate part or all of the design requirements and limitations discussed in the subsection containing each picture. Care has been taken to ensure that the pictures are consistent with the standards. However, where the picture includes features that are not consistent with design standards contained within the written standard, the written standard prevails.~~

(1) Blade and Hanging Signs. Blade signs may be allowed ~~as noted in~~pursuant to SMC ~~21B.45.080;~~ 21B.45.080(1); provided, that blade signs:

(a) Shall provide a minimum clearance of eight feet;

(b) With horizontally oriented text or graphics shall not project or be located more than five feet from the building ~~facade~~façade;

(c) With vertically oriented text or graphics shall not project more than three feet from the building ~~facade~~façade;

(d) Shall be limited to two square feet of sign area per each 10 lineal feet of applicable building frontage;

(e) Buildings that contain multiple tenants shall use a similar shape and mounting technique to hanging or blade signs;

(f) Sign text and graphics may use neon lettering, subject to provisions of SMC ~~21B.45.110(~~ 21B.45.110(2); and further provided, that neon signs shall not be visible from 228th Avenue; and

(g) May be opaque signs containing internal illumination consistent with SMC ~~21B.45.110;~~ 21B.45.110;

Yes

Yes

No (exceeds height)

Yes

Yes (Opaque sign)

No (exceeds height, cabinet sign)

~~**Figure 21B.45.120a. Acceptable and unacceptable blade and hanging signs.**~~

(2) Channel Letter, Opaque, Painted, and Shadow Signs. Channel letter, opaque, painted, and shadow signs may be allowed ~~as noted in~~pursuant to SMC ~~21B.45.080;~~ 21B.45.080(1); provided, that:

(a) Channel letter, opaque, painted, or shadow signs that are also wall signs shall be attached directly to the building ~~facade~~façade, such that there is a maximum protrusion of one foot unless the sign incorporates sculptural elements or architectural devices. The sign frame shall be concealed or integrated into the building's architectural character in terms of form, color, and materials;

(b) Channel letter and shadow signs shall only be wall signs. Opaque and painted signs may be wall signs, hanging, or blade signs;

(c) Lettering on opaque signs may be internally illuminated where the light only shines through the letters;

(d) Buildings that contain multiple tenants shall use a consistent sign design in terms of lettering, size, color, and style;

(e) Shadow signs may be illuminated by reflected lighting against the building ~~facade~~façade located behind the sign letters or graphics;

(f) Channel letter signs shall be open, such that internal neon lighting is visible;

(g) Painted signs may be illuminated by indirect fully cutoff lighting;

(h) Wall sign lettering and graphics shall not exceed a maximum height of two feet;

Yes

Yes

No (Inconsistent sign design, lettering, graphics)

~~Figure 21B.45.120b. Acceptable and unacceptable sign examples.~~

Yes

Yes

~~**Figure 21B.45.120c. Acceptable and unacceptable sign examples.**~~

(3) Marquee/Awning Signs. Marquee/awning signs may be allowed ~~as noted in~~pursuant to SMC ~~21B.45.080;~~ 21B.45.080(1); provided, that:

(a) The sign shall provide a minimum clearance of eight feet;

(b) The face of the sign (lettering and graphics) on a marquee or awning shall be on a parallel plane to the building ~~facade~~façade;

(c) The awning or marquee supporting the sign shall extend at least three feet from the face of the building, shall be located over a pedestrian walkway or sidewalk, and shall be designed to provide protection from the weather, in addition to supporting the sign;

(d) Sign may be comprised of channel lettering, opaque, or shadow signs;

(e) Sign lettering and graphics shall not exceed two feet in height;

(f) Sign width shall be limited to no more than two-thirds of the width of the awning ~~width~~; and

(g) Marquee signs may be placed on the front, above, or below the marquee associated with the sign;

(h) Marquee and awning signs may be externally illuminated~~;~~

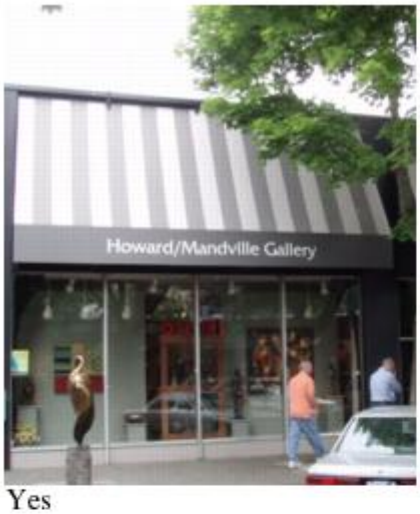


Yes

Yes

No (internally illuminated, cabinet box sign)

Yes

Yes

No (awning over landscaping)

Yes

Yes

No (sign face not parallel to building)

~~**Figure**~~, pursuant to SMC 21B.45.~~**120d. Acceptable and unacceptable marquee/awning signs.**~~110(2);

(4) Window Signs. Window signs may be allowed ~~as noted in SMC 21B.45.080;~~pursuant to SMC 21B.45.080(1); provided, that:

(a) Permanent and temporary window signs are limited to a maximum of 25 percent of the window area in addition to the size limitations of SMC ~~21B.45.110(~~ 21B.45.110(1);

(b) Signs shall be constructed of neon, stained glass, gold leaf, cut vinyl, or etched glass;

(c) Signs shall not be illuminated, except that a single internally lit neon or stained glass window sign is allowed;

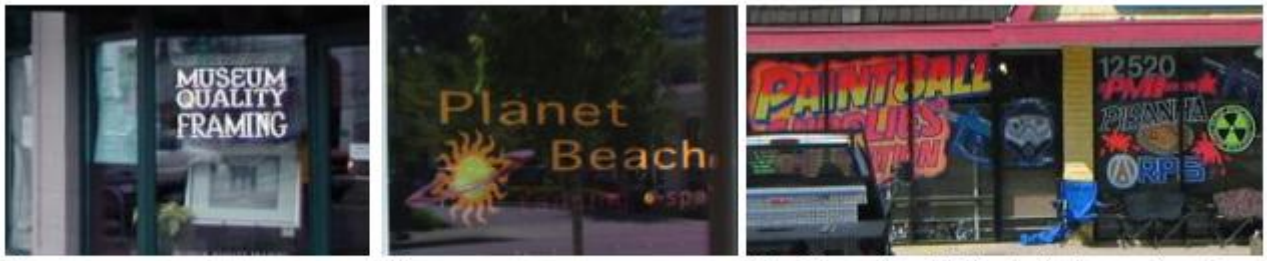


Yes | Yes | No (More than 25% of window, painted signs)

~~**Figure 21B.45.120e. Acceptable and unacceptable window signs.**~~

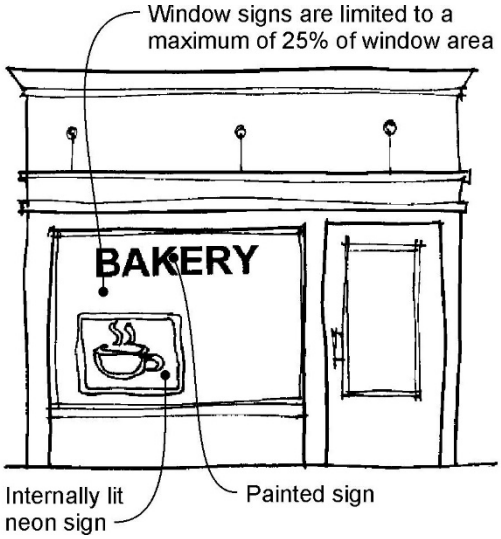

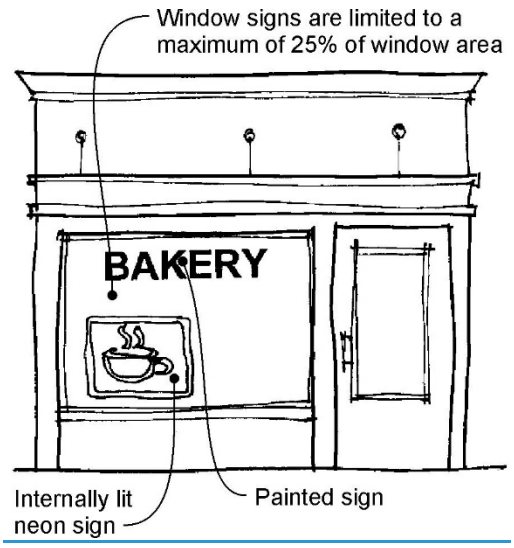


**Figure 21B.45.120f. Window sign example.**

(5) Monument Signs. Monument signs may be allowed ~~as noted in~~pursuant to SMC ~~21B.45.080;~~ 21B.45.080(1); and provided, that:

(a) One monument sign is allowed per commercial, institutional, or mixed-use building subject to the following:

(i) The sign may be up to six feet tall;

(ii) Monument signs for individual businesses should include the street address number with six-inch minimum lettering that is clearly readable from the street;

(iii) Lettering style, form, size, dimension, and color shall be consistent on signs identifying multiple tenants;

(b) One monument sign is allowed associated with a single-family subdivision or multifamily residential development, provided the sign shall not exceed a height of 48 inches;

(c) Monument signs may only be indirectly illuminated;

(d) Monument signs shall be designed incorporating natural materials (e.g., granite or basalt stone facing, wood, landscaping), muted colors, and design styles characteristic to the Northwest;

(e) The total sign area contained within a monument sign shall not exceed ~~24~~48 square feet;

(6) Directional Signs. Directional signs may be allowed ~~as noted in~~pursuant to SMC ~~21B.45.080;~~ 21B.45.080(1); provided, that:

(a) Pedestrian-Oriented Directional signs.

(i) Signs shall be located within 10 feet of the intersection of two or more pedestrian sidewalks or paths;

(ii) Signs shall not exceed a height of eight feet;

(iii) Sign lettering and graphics shall not exceed a height of ~~two~~six inches;

(b) Vehicle-Oriented Directional signs.

(i) Signs shall be located within 20 feet of one of the following intersections:

(A) SE 4th Street and 228th Avenue SE;

(B) SE 8th and 228th Avenue SE; and

(C) As otherwise identified through a unified zone development plan application.

(ii) Signs shall not exceed a height of eight feet;

(iii) Sign lettering and graphics shall not exceed a height of 10 inches; and

(iv) All signs located on a street corner or driveway shall conform with Chapter 14.01 SMC, Public Works Standards Adopted, and SMC 21B.25.200, Sight distance requirements. (Ord. O2010-293 § 1 (Att. A))

Yes | Yes | No (Too tall)

~~**Figure 21B.45.120g. Acceptable and unacceptable directional signs.**~~

~~(Ord. O2010-293 § 1 (Att. A))~~

**21B.45.130** ~~Community bulletin board signs.~~

~~One community bulletin board sign is permitted within the Sammamish Commons Comprehensive Plan designated center with the following limitations:~~

~~(1) A community bulletin board sign, which may be a changing message center sign, may not exceed 32 square feet and is only permitted at City Hall. (Ord. O2010-293 § 1 (Att. A))~~

~~21B.45.140~~ **Design and Compatibility ~~and design review~~Review.**
(1) The goal of ~~this section~~the Level 2 Design and Compatibility Review is:

(~~1)~~ a) To encourage interesting, creative, and unique sign design that is consistent with the character of the Town Center;

(~~2)~~ b) To encourage signs that are timeless, create an intimate pedestrian environment, and incorporate natural materials (e.g., granite or basalt stone, wood, landscaping) or colors (muted earthen tones) associated with the Northwest; and

(~~3)~~ c) To ensure that signs are part of, and consistent with, the overall design approach of a project.

~~The pictures and figures contained at the end of this section are intended to illustrate signs that meet these design goals.~~(2) The following criteria are the parameters that will be used for reviewing signs for compatibility and design to achieve the goals listed above and the purpose of this chapter; these criteria are in addition to the sign design standards contained within SMC ~~21B.45.110 and 21B.45.120:~~ 21B.45.110 and 21B.45.120:

(~~4)~~ a) Architectural Compatibility. The signs shall be compatible in size, proportion, shape, character, and quality of design with the exterior architecture of the premises and other structures in the immediate area.

(~~5)~~ b) Simplicity. To the extent feasible, the sign should be graphic and with limited use of words, with the design emphasis on simplicity of style. A simple design or abstract graphic design is preferred. Similarly, a simple sign frame and supporting structure is preferred.

(~~6)~~ c) Target Audience. Only one sign per building ~~facade~~façade should be designed for vehicle and pedestrian use. Signs that are targeted primarily to serve pedestrians are generally preferred over signs targeted for both pedestrian and vehicle audiences.

(~~7)~~ d) Identification. A commercial sign should be designed for the primary purpose of identifying a business or office.

(~~8)~~ e) Fewer Signs. In the use of the total sign allowance at a particular premises, the use of a minimum number of signs is preferred to the use of many signs, so that a cluttered effect is avoided.

(~~9)~~ f) Shape, Size, and Orientation. The shape of a sign should not conflict with the architectural lines of its setting. Signs should be directed toward the passing motorist or pedestrian. No sign should be designed to be readable or to attract motorists from a great distance.

(~~10)~~ g) Illumination and Colors. A sign must not overpower its surroundings through hue, saturation, or brilliance or close combination of incompatible colors. Sources of illuminations shall be screened from public view and shall be designed to avoid glare onto a street or adjacent property.

(~~11)~~ h) Landscaping. Signs shall be placed with consideration for existing and future growth of trees and other landscaping. A monument sign reviewed under this section must be placed in a landscaped area or planter, with landscaping maintained.

(~~12)~~ i) Compatibility with Adjacent Uses. The design, illumination, and location of a sign shall not impair the visibility or the design quality of existing, conforming signs, adjacent buildings, or adjacent uses.

**Figure 21B.45.140a. Acceptable sign examples.**

**Figure 21B.45.140b. Acceptable sign examples.**

~~Figure 21B.45.140c. Acceptable sign examples.~~

(Ord. O2010-293 § 1 (Att. A))

**21B.45.~~150~~ 140 Temporary signs.**

The following temporary signs or displays are permitted and, except as required by the International Building Code; Chapter 16.20 SMC, Construction Administrative Code; or as otherwise required in this chapter, do not require ~~building permits:~~a sign permit, subject to the requirements set out in this chapter. All temporary signs shall not obstruct sight distances and shall follow the regulations prescribed by Chapter 14.01 SMC, Public Works Standards Adopted, and by SMC 21A.25.220, Sight distance requirements. No temporary signs shall be located within center medians or within roundabouts, traffic circles, or islands. Temporary signs shall not be illuminated.

(1) ~~(1) Grand Opening~~Non-Commercial Temporary Signs.
No sign permit is required to post a non-commercial temporary sign in the public right-of-way or on private property if it meets the requirements in this section and in the following table. Non-commercial temporary signs not conforming to the regulations of this section may be approved through a right-of-way permit

a) Non-commercial temporary signs may be placed between the sidewalk and the right-of-way line. On roads that only have a shoulder and do not have a sidewalk, non-commercial temporary signs must be placed a minimum of 3 feet from the edge of the asphalt.
b) Non-commercial temporary signs shall not be placed in the right-of-way within a 150-foot radius of the center of an intersection.
c) The City Engineer, in consultation with the director of public works or their designee, and following review of applicable state and city codes, may approve non-commercial temporary sign placement in the improved portion of the public right-of-way or within a 150-foot radius of the center of an intersection provided that the location and sign characteristics will not present a traffic safety issue.
d) Non-commercial temporary signs shall not be placed in a manner that negatively affects the health of trees, shrubs, or other landscaping.

| | Non-Commercial Temporary Sign Type I Public Right-of-Way (Non-A-Frame) | Non-Commercial Temporary Sign Type II Public Right-of-Way (A-Frame) | Non-Commercial Temporary Sign Type III – Private Property (All Sign Types)(1) |
|---|---|---|---|

| | | | |
|---|---|---|---|
| Size Limit | 4 sq ft | 6 sq ft | 16 sq ft if located less than 50 feet from a street property line; 32 sq ft if located 50 feet or more from a street property line |
| Height Limit | 3 ft above grade | 3.5 ft | 8 ft |
| Duration | 180 consecutive days | 2 consecutive days | 180 consecutive days |

Development Conditions

(1) Placement of off-premises temporary signs on private property is subject to the landowner's authorization.

(2) Commercial Temporary Signs.

(a) Temporary Commercial Displays.

~~(a) Signs~~On-premises signs, posters, pennants, strings of lights, blinking lights, balloons, and searchlights are permitted for a period of up to ~~one month to announce the opening of a new enterprise or the opening of an enterprise under new management; and~~30 consecutive days once each calendar year for businesses located in Sammamish Town Center.

(b) ~~All grand opening displays shall be removed upon the expiration of 30 consecutive days;~~

~~(2) Construction~~ Signs~~.~~

~~(a) Construction signs identifying architects, engineers, planners, contractors, or other individuals or firms involved~~ located on property with ~~the~~active construction ~~of a building and announcing the character of the building or the purpose for which the building is intended may be displayed;~~.

~~(b)~~ 1.One ~~nonilluminated~~non-illuminated, double-faced sign is permitted for each public street upon which the project fronts;

~~(c)~~ 2.No sign shall exceed 32 square feet in surface area or 10 feet in height, or be located closer than 30 feet from the property line of the adjoining property; and

~~(d) Construction signs~~ 3. Signs must be removed by the date of first occupancy of the premises or one year after placement of the sign, whichever occurs first;

(3) ~~Political~~ Signs~~. Political signs are~~ Associated with Properties for Sale or Rent.

| | Signs Located On Property with Individual Unit for Sale or Rent |
|---|---|
| Sign Quantity | One (1) per public street frontage |
| Permitted Location | Public street frontage |
| Permitted Duration | Signs shall be removed within five days after closing of the sale, lease or rental of the property. |
| Maximum Size Area | 8 sq ft |
| Maximum Height | 6 ft |

| | |
|---|---|
| | Signs Located Off-Site of Property with Individual Unit for Sale or Rent[1] |
| Sign Quantity | One (1)[2] |
| Permitted Location | Public right-of-way adjacent to the intersection of the primary vehicle entrance to the property and closest public street. |
| Permitted Duration | Signs shall be removed within five days after closing of the sale, lease or rental of the property. |
| Maximum Size Area | 4 sq ft |
| | Signs on Property with Commercial or Industrial Property For Sale or Rent |
| Sign Quantity | One (1) |
| Permitted Location | Public street frontage |
| Maximum Size Area | 32 sq ft |
| Maximum Height | 12 ft |
| | Signs on Newly Constructed Residential Developments for Sale |
| Sign Quantity | One (1) |
| Permitted Location | Public street frontage |
| Maximum Size Area | 32 sq ft |
| Maximum Height | 12 ft |
| | Directional Signs Located Off-site Of Newly Constructed Residential Developments for sale |
| Sign Quantity | Two (2) |
| Permitted Location | Private property (with permission); public right-of-way |
| Maximum Sign Area | 16 sq ft |

Development Conditions

(1) Only allowed~~, subject to the following requirements:~~

~~(~~ for properties with a~~) Location.~~

~~(i) Political signs may be displayed on private property with the consent of the property owner;~~

~~(ii) Political signs may be displayed within public easements or streets; provided, that signs shall not be located within the center median of principal, minor, and collector arterials (as defined) or within roundabouts, traffic circles, or islands;~~

~~(iii) Political signs located pursuant to subsection (3)(a)(i) or (ii) of this section shall not obstruct sight distances as prescribed by Chapter 14.01 SMC, Public Works Standards Adopted, or by SMC 21B.25.200, Sight distance requirements.~~

~~(b) Specifications.~~

~~(i) Political signs located on private property may have a maximum sign area of up to 32 square feet;~~

~~(ii) Freestanding political signs on private property may be up to eight feet tall;~~

~~(iii) Political signs located on or within public easements or streets may have a maximum sign area of up to four square feet and may be up to three feet tall above grade;~~

~~(iv) Political signs located within 15 feet of a street corner or driveway, as further identified in Chapter 14.01 SMC, Public Works Standards Adopted, or by SMC 21B.25.200, Sight distance requirements, shall be further limited in sign area and height as necessary to satisfy sight distance limitations;~~

~~(c) Removal.~~

~~(i) Political signs shall be removed within seven days following the election;~~

~~(ii) Property owners shall be responsible for the removal of political signs located on private property;~~

~~(iii) The campaign officer or responsible official shall be responsible for the removal of political signs located on or within public easements or streets;~~

~~(4) Real Estate Signs. All temporary real estate signs may be single- or double-faced signs:~~

~~(a) Signs advertising an individual residential~~ unit for sale or rent ~~are allowed without City permits, subject to the following:~~

~~(i) Location.~~

~~(A) One on-site sign per street frontage;~~

~~(B) One off-site sign is allowed on private property or in City street right-of-way between the effective date of Ordinance O2009-XXX (adopting ordinance) and December 31, 2010, subject to the following:~~

~~(1) The individual residential unit or property for sale or rent~~ that is not located adjacent to a public street~~;~~.

~~(2) The off-site sign is located on private property or City street right-of-way, adjacent to the intersection of the primary vehicle entrance to the property and the closest public street;~~

~~(3)~~ (2) When more than three off-site real estate signs are proposed for a location, the fourth proposed sign owner shall install and make available to other licensed real estate agents a frame, designed to allow for a minimum of six signs to be hung in a stacked fashion, to accommodate multiple signs; ~~and~~

~~(4) Off-site real estate signage displayed on private property shall be with the consent of the property owner.~~

~~(5) Signs located in the City street right-of-way shall be located outside of the improved portion of the right-of-way (behind the sidewalk, roadway shoulder, drainage ditch, etc., whichever is furthest from the traveled roadway), and may be removed by the City if determined to be a hazard or if the placement is otherwise in conflict with the public use of the right-of-way.~~

~~(C) All signs located on a street corner or driveway shall conform with Chapter 14.01 SMC, Public Works Standards Adopted, and SMC 21B.25.200, Sight distance requirements.~~

~~(ii) Specifications.~~

~~(A) On-site signs shall not exceed eight square feet in area;~~

~~(B) On-site signs shall not exceed six feet in height;~~

~~(C) Individual off-site signs shall not exceed an area of four square feet;~~

~~(D)~~ Frames installed to hold multiple real estate signs shall not exceed a height of six feet~~;~~

~~(E) Off-site signs located on a frame shall be designed to allow for a minimum of six signs to be hung, in a stacked fashion;~~

~~(F) Real estate offices or individual realtors that are advertising the sale or lease of more than one property at a corner shall be limited to one sign; and~~

~~(G)~~ . Off-site signs located on a frame shall individually not exceed a height of one and ~~one~~ a half feet, a width of two feet, and an area of three square feet.

~~(iii) Removal. Signs shall be removed within five days after closing of the sale, lease or rental of the property.~~

~~(b) Portable off-premises residential directional signs announcing directions to an open house at a specified residence that is offered for sale or rent shall not exceed six square feet in area for each sign, and shall not exceed 42 inches in height. Such signs shall be permitted only when the agent or seller is in attendance at the property for sale or rent and may be located on the right-of-way outside of vehicular and bicycle lanes.~~

~~(c) On-site commercial (nonresidential) or industrial property for sale or rent signs shall be limited to one sign per street frontage, and shall not exceed 32 square feet in area. The sign shall not exceed 12 feet in height. The sign shall be removed within five days after closing of the sale, lease or rental of the property. A building permit is required and shall be issued for a one-year period. The permit is renewable for one-year increments up to a maximum of three years.~~

~~(d) On-site residential development for sale or rent signs shall be limited to one sign per development. The sign shall not exceed 32 square feet in area, and shall not exceed 12 feet in height. A building permit is required and shall be issued for a one-year period. The permit is renewable annually for up to a maximum of three years.~~

~~(e) Off-site directional signs for residential developments shall be limited to six signs. Each sign shall not exceed 16 square feet in area, and shall include only the name of and directions to the residential development. The sign(s) shall be placed a maximum of two road miles from the nearest residential development entrance. No two signs for one residential development shall be located closer than 500 feet from one another on the same street. A single building permit is required for all signs and shall be issued for a one-year period. The permit number and the permit expiration date must be clearly displayed on the face of each sign. The permit is renewable for one-year increments up to a maximum of~~

~~three years; provided, that extensions will only be granted if the sign permit applicant has complied with the applicable regulations.~~

~~(f) Residential on-premises informational signs shall be limited to one sign per feature, including but not limited to signs for information centers, model homes, parking areas or announcing features such as parks, playgrounds, or trails. Each sign shall not exceed 16 square feet in area, and shall not exceed six feet in height;~~

~~(5) Community Event Signs. Community event signs are allowed, subject to the following requirements:~~

~~(a) Location.~~

~~(i) Community event signs may be displayed on private property with the consent of the property owner.~~

~~(ii) Community event signs may be displayed within public easements or streets; provided, that:~~

~~(A) Signs shall be A-frame signs as specified in subsection (5)(b) of this section; and~~

~~(B) Signs shall not be located within the center median of principal, minor, and collector arterials (as defined) or within roundabouts, traffic circles or islands.~~

~~(iii) Community event signs located pursuant to subsection (5)(a)(i) or (ii) of this section shall not obstruct sight distances as prescribed by Chapter 14.01 SMC, Public Works Standards Adopted, or by SMC 21B.25.200, Sight distance requirements.~~

~~(iv) The director, in consultation with the City engineer, and following review of applicable state and City codes, may approve temporary sign placement in the public right-of-way on hardscape areas (i.e., concrete pads or other sidewalk areas not used for pedestrian travel); provided, that sign location does not conflict with subsection (5)(a)(i) or (ii) of this section.~~

~~(b) Specifications.~~

~~(i) Community event signs on private property may have a maximum sign area of 32 square feet;~~

~~(ii) Community event signs on public easements or streets shall be "A-frame" signs that shall not exceed six square feet in area for each sign, and shall not exceed 42 inches in height;~~

~~(iii) Community event signs located within 15 feet of a street corner or driveway, as further identified in Chapter 14.01 SMC, Public Works Standards Adopted, or by SMC 21B.25.200, Sight distance requirements, shall be further limited in sign area and height as necessary to satisfy sight distance limitations; and~~

~~(iv) Community event signs shall be stationary and shall not be illuminated.~~

~~(c) Removal.~~

~~(i) Community event signs shall be removed within seven days following the end of the community fair, festival, or event; provided, that the signs shall not be displayed for more than a total of 21 calendar days; and~~

~~(ii) Sign removal shall be the responsibility of the event sponsor;~~

~~(6)~~ (4) Community Banner Signs. ~~Community banners are allowed subject to the following provisions:~~

(a) ~~(a)~~ Community ~~banners~~banner signs shall only be located on public banner poles erected by the City for that use;
(b) ~~(b) Letters~~Letter on ~~the sign~~such signs shall not be less than 12 inches in height except for lettering associated with sponsor logos;
(c) ~~(c) Banners~~Community banner signs shall not be illuminated or have any attention-getting lights; and

~~(d) Sponsor logos shall be limited to the name and corporate symbol of the sponsor;~~

(d) ~~(7)~~ Only City-sponsored events may be advertised using the Community Banner program

(5) Pedestal Signs. Temporary pedestal signs are allowed in the TC-A and TC-B zones, subject to the following provisions:

(a) The sign shall be placed such that there is a minimum of a six-foot-wide pedestrian access around the sign;

(b) The sign shall not exceed a height of six feet;

(c) The sign face shall not exceed an area of three square feet;

(d) Sign lettering and graphics shall not exceed a height of four inches;

(e) The frames and other support structures shall be consistent with the building's architectural character in terms of form, color, and materials such that there is a consistent design theme.

Yes | Yes | No (not a pedestal sign)

~~**Figure 21B.45.150a. Acceptable and unacceptable pedestal signs.**~~

(Ord. O2010-293 § 1 (Att. A))

## ~~21B.45.160 Compliance clause.~~

~~Legally established signs that do not conform to the design standards of SMC 21B.45.110, General sign design standards, or 21B.45.120, Design standards for specific sign types, shall be brought into compliance when there is a change in use associated with the sign or when the sign is entirely removed or replaced. (Ord. O2010-293 § 1 (Att. A))~~

## ~~21B.45.170 Electronic reader board pilot program adopted.~~

~~The provisions of Chapter 21A.45 SMC, Article II, shall apply to the Town Center sub-area, including SMC 21A.45.130 through 21A.45.180. (Ord. O2010-293 § 1 (Att. A))~~

## ~~21B.45.180 Definitions.~~

~~Pictures contained in the sign definition section are intended to provide examples of the sign described.~~

~~(1) "Sign" means any medium, device, structure, fixture, or placard, including any necessary supporting structure and component parts, that is visible from a public right-of-way or surrounding properties, and uses graphics, symbols, or written copy to convey a message, attract attention to, or advertise a product, place, activity, business, event, good, service, or land use.~~

~~(2) "Sign, awning/marquee" means a sign painted on or attached directly to and supported by an awning or marquee. An awning may be constructed of rigid or nonrigid materials and may be retractable or nonretractable. A marquee is a roof-like shelter, as of glass, projecting above an outer door and over a sidewalk or a terrace, which may be attached to a building or be freestanding.~~

~~(3) "Sign, blade" means a small, pedestrian-oriented building-mounted sign that is attached to and supported by the exterior wall of a building with the exposed face of the sign on a plane perpendicular to the wall of the building, projecting more than one foot from the wall of a building and vertical to the ground.~~

**~~Figure~~ 21B.45.~~180a. Blade~~150 Legal non-conforming signs.**

(1) Any sign located within the city limits on the date of adoption of the ordinance codified in this title, or located in an area annexed to the city thereafter, which does not conform with the provisions of this code, shall be considered a legal nonconforming sign and is permitted, provided it also meets the following requirements:

(a) The sign was covered by a permit on the date of adoption of the ordinance codified in this title if one was required under applicable law; or

(b) If no permit was required under applicable law for the sign ~~examples.~~in question, the sign was in all

~~(4) "Sign, box/cabinet" means a building-mounted sign that is attached to and supported by the exterior wall of a building with the exposed face of the sign on a plane parallel to the wall of the building and where the sign or individual letters are contained within a box or cabinet and are internally illuminated.~~

respects compliant with applicable law on the date of adoption of the ordinance codified in this title.

(2) Loss of legal nonconforming status. Nonconforming signs shall not be altered in size, shape, height, location, or structural components without being brought to compliance with the requirements of this code. Repair and maintenance are allowable, but may require a permit if structural components require repair or replacement. (Ord.

~~Figure~~ O2010-293 § 1 (Att. A))

**21B.45.~~180b. Cabinet~~160 Variance.**

(1) A sign variance is categorized as a Type 1 land use application and shall be subject to the requirements of SMC 21A.110.030. Variances from the terms of this chapter may be granted by

director of community development upon complete application. Variances may be granted when, because of unique circumstances applicable to the property, including size, shape, topography, location, or surroundings, the strict interpretation of the regulations of this chapter deprives such property of privileges enjoyed by other property in the vicinity and under identical zoning classifications.

(2) The variance shall not constitute a grant of special privilege inconsistent with a limitation upon uses of other properties in the vicinity and zone in which such property is situated.

**21B.45.170 Enforcement.**

(1) Compliance with other applicable codes. All signs erected or altered under this chapter must comply with all applicable federal, state and local regulations relating to signs, including without limitation the provisions of the International Building Code as adopted in SMC 16.05.010 by the city. If any provision of this code is found to be in conflict with any provision of any zoning, building, fire, safety or health ordinance or code of the city, the provision which establishes the higher standard shall prevail.

(2) Sign maintenance. All permanent and temporary signs must be kept in good repair and in a safe manner at all times. The sign owner must repair damaged or deteriorated signs within 30 days of notification by the city. The area surrounding freestanding signs must be kept free of litter and debris at all times.

(3) Inspection. Code enforcement officers are authorized to inspect any sign ~~examples.~~covered by this chapter for the purpose of inspection of the sign, its structural and electrical connections, and to ensure compliance with the provisions of this code. Such inspections shall be carried out during business hours, unless an emergency exists.

~~(5) "Sign, building-mounted" means a sign that is attached directly to a building or indirectly attached to a building by a support structure. Building-mounted signs may include, but are not limited to, wall, hanging, blade, awning, marquee, opaque, channel, painted, shadow, and window signs.~~

~~(6) "Sign, changing message" means a sign that contains electronically controlled digital or illuminated text, or a sign that contains text that can be manually changed.~~

~~**Figure 21B.45.180c. Changing message sign examples.**~~

~~(7) "Sign, channel letter" means a wall sign that is comprised of lettering that is attached to and supported by the exterior wall of a building or a structure with the exposed face of the lettering or graphics on a~~

~~plane parallel to the wall of the building, and where the letters contain an open channel into which neon lighting is inserted.~~

~~**Figure 21B.45.180d. Channel letter sign examples.**~~

~~(8) "Sign, community banner" means a temporary sign, located on City banner poles, which advertises an event that would provide civic, cultural, educational, philanthropic, or service opportunities hosted or promoted by the City or a community group that is not-for-profit or nonprofit and nonpolitical with an IRS designation of Section 501(c) or (d).~~

~~(9) "Sign, community event" means a temporary sign announcing or promoting a nonprofit or not-for-profit sponsored community fair, festival, event (community events include but are not limited to regularly scheduled events or meetings by churches, homeowners' associations and other community groups).~~

~~(10) "Sign, directional" means a sign that is primarily designed to guide or direct pedestrian or vehicular traffic to an area, business, place, or convenience, and may include incidental graphics such as trade names and trademarks.~~

~~**Figure 21B.45.180e. Directional sign examples.**~~

~~(11) "Sign, hanging" means a small, pedestrian-oriented sign that is hung beneath an awning, canopy, or marquee sign or other structure.~~

~~**Figure 21B.45.180f. Hanging sign examples.**~~

~~(12) "Sign, incidental" means a sign, emblem or decal designed to inform the public of goods, facilities, or services available on the premises, and may include but not be limited to signs designating:~~

~~(a) Restrooms;~~

~~(b) Hours of operation;~~

~~(c) Acceptable credit cards;~~

~~(d) Property ownership or management;~~

~~(e) Phone booths; and~~

~~(f) Recycling containers.~~

~~(13) "Sign, freestanding" means a sign standing directly upon the ground or having one or more supports standing directly upon the ground, and being detached from any building or fence.~~

~~(14) "Sign, fuel price" means a sign utilized to advertise the price of gasoline and/or diesel fuel.~~

~~(15) "Sign, logo" means a sign, graphic representation, or symbol of a company name, trademark, or abbreviation, uniquely designed for ready recognition. A logo sign may be a wall sign or a freestanding sign.~~

~~(16) "Sign, monument" means a freestanding sign that is above ground level and is anchored to the ground by a solid base, with no open space between the sign and the ground.~~

~~(17) "Sign, opaque" means a building mounted sign that is attached to and supported by the exterior wall of a building or a structure where the surface of the sign is generally comprised of two or more opaque~~

~~materials on the same plane. Where internally illuminated, the opaque material that comprises the lettering of the sign may be translucent such that it allows limited light to shine through the sign letters.~~

~~**Figure 21B.45.180g. Opaque sign examples.**~~

~~(18) "Sign, painted" means a sign, mural or graphic design painted directly onto a building facade or onto a flat wood or metal surface that is then attached to the building facade.~~

~~**Figure 21B.45.180h. Painted sign examples.**~~

~~(19) "Sign, permanent residential development identification" means a permanent monument or wall sign identifying the residential development upon which the sign is located.~~

~~(20) "Sign, pedestal" means a temporary, pedestrian-oriented sign placed atop a pedestal that is affixed to a heavy horizontal base.~~

~~**Figure 21B.45.180i. Pedestal sign examples.**~~

~~(21) "Sign, political" means a sign advertising a candidate or candidates for public elective office, or a political party, or signs urging a particular vote on a public issue decided by ballot.~~

~~(22) "Sign, primary" means a painted, opaque, awning, marquee, or channel letter sign that is designed to be the primary source of business identification to both pedestrian and vehicular traffic.~~
~~(23) "Sign, secondary" means a window, logo, blade, or hanging sign that generally contains secondary, pedestrian-oriented business identification, business product information, or hours of operation.~~
~~(24) "Sign, shadow" means a wall sign comprised of individual letters or graphics that is attached to and supported by the exterior wall of a building with the exposed face of the sign lettering or graphics on a plane parallel to the wall of the building, where the surface of the sign is generally comprised of a completely opaque material. The sign lettering or graphics are separated from the building facade such that during daylight hours the lettering generates a shadow on the building facade.~~

~~**Figure 21B.45.180j. Shadow sign examples.**~~
~~(25) "Sign, temporary" means a sign that is designed to be displayed for a limited amount of time and is not permanently placed or affixed such as to prevent its removal;~~
~~(26) "Sign, window" means a sign that is constructed of neon, stained glass, gold leaf, cut vinyl, etched glass, or similar material in a window.~~

~~(27) "Sign, wall" means any sign painted on, or attached directly to and supported by, the wall of a building or structure. All wall signs are building mounted signs. Wall signs may include, but are not limited to, window, opaque, shadow, painted, channel letter, and logo signs. (Ord. O2010-293 § 1 (Att. A))~~

(4) Abatement. In addition to the abatement authority provided by proceedings under SMC 21A.115.030, the city or its agents may summarily remove any sign placed on a right-of-way or public property in violation of the terms of this chapter under the following circumstances:

(a) When a sign is determined by the city engineer or director of community development to present an immediate threat to the safety, health, and welfare of the public;

(b) When a sign is illegally placed within the public right-of-way, within a landscape median, landscape island, traffic circle, attached to a utility pole or city traffic sign, upon public sidewalks or roadway, or on any public building or structure when such facilities are located on public property or within public right-of-way;

(c) When a sign is determined by the city to be abandoned; provided, that the city must first provide fourteen days' notice to the underlying property owner or business owner that the sign is deemed abandoned;

(d) Disposal of signs. When a sign has been removed by the city as authorized by this section, the city shall take the following actions:

(i) The city shall hold a sign for at least seven days. After seven days the city may dispose of the sign without prior notice to the sign owner. The city shall not be responsible for damage or loss during removal or storage of any signs in violation of this code. Sign owners wishing to reacquire possession of removed signs prior to their disposal shall pay an impoundment fee pursuant to SMC 23.100.010.

(ii) For signs with a fair market value exceeding five hundred dollars, the city shall provide notice by mail to the following:

(A) Sign owner. If the mailing address can be determined by the city after reasonable efforts in investigation. "Reasonable efforts" shall include investigation efforts that take no longer than one-half hour of staff time.

(B) Underlying property owner. If the address of the sign owner cannot be reasonably ascertained, the city shall mail the notice to the underlying real property owner, as identified in the records of the King County Assessor's Office.

Exhibit 4

Exhibit 5

Michael R. Kenyon
Rachel B. Turpin
Ann Marie J. Soto
Kim Adams Pratt
Robert F. Noe
David A. Linehan
Amy S. Blue
Charlotte A. Archer
Alexandra L. Kenyon

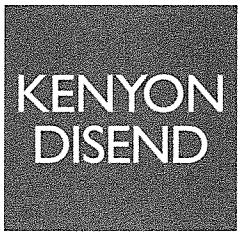


Bruce L. Disend
Doug F. Mosich
*Of Counsel*

Shelley M. Kerslake
*1967 - 2014*

# MEMORANDUM

TO: David Goodman; City of Sammamish Planning Commission

FROM: Charlotte A. Archer, Kenyon Disend PLLC CAA

DATE: February 14, 2017

RE: Regulation of Banners

---

## I. ISSUE PRESENTED AND SHORT ANSWER

The City has requested an analysis of the legal issues surrounding the City's Community Banner program, in the context of traditional free speech jurisprudence and the recent decision issued by the U.S. Supreme Court in Reed v. Town of Gilbert, AZ, which changed the landscape for municipal regulations of speech regarding regulations governing signage on public and private property. The answer to the City's query depends upon which legal doctrine the Court applies to the City's program. The Courts are divided as to whether banner programs (and comparable programs of various formats) constitute traditional or limited public fora, or government speech.

## II. BACKGROUND ON BANNER PROGRAM

The City hosts a "Community Banner" program which allows certain entities to post banners that span 228th Avenue Southeast at certain places for a short period. SMC 21A.45.120(6) states, in pertinent part:

> (6) Community Banners Sign. Community banners are allowed subject to the following provisions:
>
> > (a) Community banners shall only be located on public banner poles erected by the City for that use;
> >
> > (b) Letters on the sign shall not be less than 12 inches in height except for lettering associated with sponsor logos;

(c) Banners shall not be illuminated or have any attention-getting lights; and

(d) Sponsor logos shall be limited to the name and corporate symbol of the sponsor.

## III. AUTHORITY AND ANALYSIS

### A. Traditional Public Fora, Limited Public Fora and Nonpublic Forum.

Jurisprudence from the U.S. Supreme Court recognizes the right of a citizen to engage in expressive activity on public property, but the Court has divided public property into three categories: traditional public forums, limited public forums, and nonpublic forums. *See* Cornelius v. NAACP Leg. Def. Fund, 473 U.S. 788 (1985).

Traditional public fora are those places which, "by long tradition or by government fiat, have been devoted to assembly and debate." Perry Educ. Ass'n v. Perry Educators' Ass'n, 460 U.S. 37, 45 (1983). Public streets and parks fall into this category. *See* Hague v. CIO, 307 U. S. 496 (1939).

A limited public forum, or a designated public forum, is "created by government designation of a place or channel of communication for use by the public at large for assembly and speech, for use by certain speakers, or for the discussion of certain subjects." Perry Education Assn., 460 U. S. at 46, n. 7.

A nonpublic forum is traditionally identified by clear evidence of a contrary intent by government to create a public forum; *i.e.*, when the nature of the property is inconsistent with expressive activity. *See* Jones v. North Carolina Prisoners' Labor Union, 433 U. S. 119 (1977). For example, the courts have held that the following are nonpublic forums: the airspace above a City; a School District's internal mail system; a military installation; and jailhouse grounds. *See* Ctr. for Bio-Ethical Reform, Inc. v. City & Cty. of Honolulu, 345 F. Supp. 2d 1123, 1131 (D. Haw. 2004), *aff'd*, 448 F.3d 1101 (9th Cir. 2006); Perry Education Assn., 460 U. S. at 46; Greer v. Spock, 424 U. S. 828 (1976); Adderley v. Florida, 385 U. S. 39 (1966).

Whether a municipal banner program falls into one of these three categories is a fact-intensive query. Public streets are traditional public fora, while at least one court has held that the airspace above a city is a nonpublic forum. In contrast, a nonpublic forum that is opened to public speech with limitations on speakers – such as a public university that provides a forum exclusively for students of that university – constitutes a limited public forum.

### B. Governing Principles for the Regulation of Speech in Traditional Public Fora.

A municipality may not place a time, place and manner restriction on public speech in a traditional public forum absent a compelling reason. See Morse v. Frederick, 551 U.S. 393, 403 (2007). In the "traditional public forum," primarily the streets and parks, the "strict scrutiny" test

applies: no content-based restrictions on speech are allowed unless necessary to serve a compelling state interest and narrowly tailored to that end. *See* Perry Education Assn., 460 U. S. at 46.

The regulations of speech in the traditional public forum must be content-neutral, and apply uniformly regardless of the speaker. For example, the U.S. Supreme Court held that the First Amendment required Ohio to permit the KKK to display a cross in the statehouse square. *See* Capital Square Review & Advisory Bd. v. Pinette, 515 U.S. 753, 777 (1995). Similarly, cities may not prohibit speech activities in a traditional forum that are not endorsed by the public agency, including political protests. Id. at 770. Notably, however, traditional public forum rights are not without limits for groups with a track record of law breaking. *See* Thomas v. Chi. Park Dist., 534 U.S. 316 (2002) (holding that Park District could deny permit to Hempfest based on past violations of park regulations).

### C. Governing Principles for the Regulation of Speech in Limited Public Fora.

The government may set reasonable content limitations on the types of speakers and subject matter allowed, so long as the limits are viewpoint neutral, when regulating speech in a limited or designated public forum. Christian Legal Soc. Chapter of the Univ. of California, Hastings Coll. of the Law v. Martinez, 561 U.S. 661, (2010); Pleasant Grove City v. Summum, 555 U.S. 460, 470 (2009).

While this test appears to give the government flexibility to tailor public programs involving private speech, the Courts have dramatically curtailed that flexibility when reviewing policies pertaining to limited fora. This issue has arisen primarily in the contexts of advertising on the sides of municipality owned buses and in meeting room use policies. The Courts have rejected Cities' attempts to use "content" restrictions to screen out public controversy, hate groups, advocates of discrimination, and religious practices, and attempts at carving out sectarian religious speech.[1] In contrast, the Courts have uniformly permitted cities to exclude commercial speech.

For example, the Court invalidated a public school's decision to exclude a Christian children's club from meeting after hours at the school, based on its religious nature of the proposed meeting. *See* Good News Club v. Milford Central School, 533 U.S. 98 (2001). The Court held that the school had opened its limited public forum to activities serving a variety of purposes, including events "pertaining to the welfare of the community," and had interpreted its policy to permit discussions of subjects such as "the development of character and morals from a religious perspective," but excluded the club on the ground that its activities, which included learning Bible verses, the relation of Bible stories to the members' lives, and prayer, were "the equivalent of religious instruction itself." In short, speech discussing otherwise permissible subjects cannot be

[1] *See* Boy Scouts of Am. v. Dale, 530 U.S. 640 (2000) (invalidating school board's termination of the Boy Scouts' use of school meeting rooms, based on the board's dislike of the Scouts' intolerance of homosexuality); Cuffley v. Mickes, 208 F.3d 702 (8th Cir. 2000), *cert. denied sub nom.* 534 U.S. 903 (2001) (rejecting Missouri's attempt to exclude the Ku Klux Klan from participation in the Adopt-a-Highway Program); Hopper v. City of Pasco, 241 F.3d 1067, 1080 (9th Cir. 2001) (court found city hall art gallery a designated forum, then struck down restriction on "no controversial art" based on unconstitutionality of "'censorship by public opinion.'"); Rosenberger v. Rector & Visitors of University of Virginia, 515 U.S. 819, 828 (1995) (invalidating university's denial of funding to paper that published news from an evangelical perspective, where university had policy to fund student newspapers).

excluded from a limited public forum on the ground that the subject is discussed from a religious viewpoint.

To determine if a restriction is reasonable, the Court will examine whether the restrictions imposed leave open alternative channels of communication. If not, then the restriction is not reasonable. Similarly, while a City is entitled to establish a specific purpose for the banner program and limit its use to that purpose, that City bears a significant burden in justifying that purpose. *See* Edwards v. District of Columbia, 755 F.3d 996 (D.C. Cir. 2014). The government must demonstrate, through evidence and not speculation and conjecture, that "the harms it recites are real," and that the restrictions it places on the purpose of the program "will in fact alleviate them to a material degree." Id.

**D. Issues Pertaining to Government Speech.**

A government entity has a right to speak for itself; in so doing, it is entitled to say what it wishes, and to select the views that it wants to express. This is commonly understood as the "government speech doctrine" and thereunder a government entity may exercise the same freedom to express its views, even when it receives assistance from private sources (including funding) for the purposes of delivering a government-controlled message. If a government is deemed to be promoting its own message, the message is not restricted by either the reasonableness standard or the viewpoint neutrality requirement discussed above. Government speech often involves the selection, and coopting, of private speech, such as selecting among applicants for a community art display, or promoting certain viewpoints by placing hyperlinks on the City's website to certain organizations.

The following are examples of government speech:

- City choosing which privately funded monuments (including a statute of the Ten Commandments) to place in the city park. *See* Summum, 555 U.S. at 470.

- Government expressing substantive policy on abortion by funding only those clinics which agreed not to counsel patients on abortion. *See* Rust v. Sullivan, 500 U.S. 573 (1991).

- Government allocating federal arts funding on the basis of "artistic merit" can incorporate values, such as decency, as part of its evaluations. *See* Under National Endowment of the Arts v. Finlay, 524 U.S. 569 (1998).

- The Town creating a website to convey information about the Town to its citizens and chose certain hyperlinks to place on that website to certain events and organizations. *See* Sutliffe v. Epping Sch. Dist., 584 F.3d 314, 331 (1st Cir. 2009)

To show government speech, a municipality must show that it has actively screened each potential private speaker and allowed only those which the administrators conclude further program goals. *See* Gentala v. City of Tucson, 244 F.3d 1065, 1068-70 (9th Cir. 2001).

Exhibit 6

City of Sammamish Washington

# Memorandum

**Date:** April 20, 2017

**To:** City Council

**From:** Shanna Collins, Chair, Planning Commission

**Re:** Summary of Planning Commission Recommendation on Sign Code

On behalf of the Planning Commission, I am pleased to forward to the City Council this recommendation on amendments to Chapters 21A.15, 21A.45, 21B.15, and 21B.45 of the Sammamish Municipal Code (SMC) related to sign regulations.

**Project Scope**

The Department of Community Development (DCD) has proposed amendments to Chapters 21A.15, 21A.45, 21B.15, and 21B.45 of the SMC, which contain sign regulations for the City as a whole as well as the Town Center subarea. This effort is in response to the decision in the 2015 United States Supreme Court case of Reed v Gilbert, which found content-based sign regulations, of which the SMC contains many, an unconstitutional restriction of free speech.

More specifically, DCD proposed and presented a partial re-write and a full re-organization of the sign code. The partial re-write focuses on changing content-based regulations into content-neutral regulations, improving enforcement mechanisms, addressing expired programs, and reforming Town Center commercial sign regulations. The goal of this re-organization is to create a more concise, easy-to-understand sign code that will be more useful to code enforcement officials, planning staff, and the public.

In many cases, the general framework of the content-based regulations has been preserved (for example, permitted location, duration, and quantity), but in other cases regulations and sign categories have been merged, amended, or eliminated.

**Project History**

The Planning Commission has been working on this issue since December 2016. Below is a summary of the public meetings that have been held for this effort:

1. At a joint meeting on December 13, 2016, the City Council and Planning Commission were presented with background information on the Reed v. Gilbert case and its implications for Sammamish's sign code.
2. On December 15, 2016, staff presented to the Planning Commission the specific sections of the SMC that contain content-based sign regulations, and offered examples of how other cities have transitioned from content-based to content-neutral regulations in response to the Reed v. Gilbert decision.
3. On January 19, 2017, Planning Commission provided input on the scope and focus of the proposed amendments.

4. On February 23, 2017 staff presented a full draft of the proposed amendments to Chapters 21A.15 and 21A.45 SMC to the Planning Commission and sought input on the proposed amendments.
5. On March 16, 2017 staff presented a full draft of the proposed amendments to Chapter 21B.15 and 21B.45 SMC to the Planning Commission.
6. On April 6, 2017 the Planning Commission held a public hearing on the proposed sign code amendments, taking public comment related to the draft regulations. Following the public hearing, the Planning Commission voted 5-0 to recommend a draft version of a partially re-written and re-organized sign code to send to City Council for deliberation.

**Summary of Sign Code Recommended by Planning Commission**

On April 6, 2017 the Planning Commission held a public hearing, deliberated on, and recommended to the City Council the following substantive amendments to the sign code by a vote of 5-0:

- *Non-commercial temporary signs (Chapters 21A.45 and 21B.45 SMC).* As a result of Reed v Gilbert, the political, fundraising, and community event temporary sign categories in Sammamish's code are no longer permissible. Staff worked with the Commission to revise the code in such a way that the spirit of the regulations was preserved in a content-neutral way. These temporary sign types were condensed into one non-commercial temporary sign category which generally follows the duration, location, size, and material restrictions of the originals.
- *Reducing temporary sign "pollution" (Chapters 21A.45 and 21B.45 SMC).* Members of the Planning Commission expressed an interest in regulations designed to reduce temporary sign "pollution" along streets. Staff proposed, and the Commission supported, a ban on temporary signs within a 150-foot radius of the center of an intersection in addition to the existing regulations prohibiting placement of temporary signs on medians, roundabouts, and sidewalks. The code will include a process by which a right-of-way permit may be issued for placement of temporary signs within the 150-foot radius for unique situations.
- *Community banner program (Chapter 21B.45 SMC).* As a result of Reed v Gilbert, the City has less control over who may utilize the community banner program. The Planning Commission was presented with a range of options for revising the community banner program in the context of Reed v. Gilbert, and determined that limiting use of the banner to events sponsored or hosted by the City is the most appropriate approach.
- *Town Center wall signs (Chapter 21B.45 SMC).* In response to concerns about the wall sign area allowed in Town Center, staff proposed and Planning Commission recommends amendments to allow a minimum guaranteed wall sign area of 10 square feet and a maximum of 320 square feet to supplement limit of 10% of the size of the building façade. Previously, wall signs within Town Center were limited to 10% of the size of the building façade, with a maximum allowable size of 24 square feet.
- *Other minor amendments (Chapter 21A.45).* In response to an issue brought up during the citizen comment portion of the March 16 Planning Commission meeting, staff proposed, and the Planning Commission recommends, increasing the number of permanent residential development identification signs allowed per major entrance to a residential development from one to either one double-sided sign or two single-sided signs in order to improve visibility for drivers coming from either direction. Additionally, the number of temporary off-site directional signs allowed per residential development has been reduced from six to two.

**Potential Future Work Items Identified**

Several individuals and groups have provided comments during Planning Commission meetings regarding areas of the sign code that were beyond the scope of work for this update. Their written comments have been included in Planning Commission packets, while oral comments made during public comment at previous Planning Commission meetings are found in the meeting minutes. The Planning Commission informally offers the following issues to the City Council as potential future work plan items.

- *Public art and murals*. Murals are currently regulated in the City as wall signs. While this has not changed in the amendments proposed by staff in this sign code update, there has been interest in discussing options for expanding the program in the future.
- *Electronic Reader Board Program*. The Electronic Reader Board Pilot program, which was established in 2009 and expired in 2014, allowed high schools on the east side of 228th Ave to install electronic reader boards. Two of the three high schools installed electronic reader board signs. Because the program has expired, City Council direction and action is required for its renewal.
- *Community Banner Program*. While the Commission produced a recommendation regarding future use of the Community Banner program, they also urged the City Council to consider enhancing the criteria for banner designs to make them more attractive, and possibly transferring it to the Arts Commission to serve as a place for public art.

Shanna Collins 4-20-2017

Shanna Collins

Chair, City of Sammamish Planning Commission

Exhibit 6

Exhibit 7

# Sammamish Plateau Water

1510 228th Avenue SE
Sammamish, WA 98075
Main: 425.392.6256
Fax: 425.391.5389
www.spwater.org

April 25, 2017

Sammamish City Council
801 228th Ave SE
Sammamish, WA 98075

Re: **Proposed Sign Code - Public Hearing Comment for May 2, 2017**

Dear Councilmembers:

The Sammamish Plateau Water & Sewer District (District) has eight water storage tanks ranging from 600,000 to 7 million gallons. Six of these tanks currently have murals painted on their sides. Three are located within the City of Sammamish. To date the District has not requested or obtained a sign permit associated with painting these tanks.

The District has concerns that the Sammamish Sign Code, as currently proposed, would affect the ability of the District to include murals on our water storage tanks as part of the District's maintenance program.

When the sign code amendment was brought to our attention, the District attempted to clarify that these murals would not be considered signs under the sign code. However, City Staff indicated they might be wall signs, subject to the code. Per the code as proposed, the District's existing murals would not have been allowed.

The District made a request to the Planning Commission to add some specific language that would very explicitly exempt murals located on public agency facilities, such as water reservoir murals. During Planning Commission discussions it was noted that art was a very broad subject and they did not want to rush a decision, and that it should be included in a future work item.

The District may be undertaking recoating of one or more tanks in the next 2-5 years. Tank coatings are an integral part of the tank and maintenance of the tank coating is part of normal maintenance. Murals on top of the base coating are not necessary, but they do provide a means of making the tank more attractive and breaking up the mass of a single color tank. Our murals enhance the urban environment and contain no advertising or lettering. The District has received no complaints on any of the murals that have been created to date, and some people have stopped specifically to photograph the murals.

The SEPA Checklist was reviewed and the response to question A.7. *Do you have any plans for future additions, expansion or further activity related to or connected with this proposal?*, the City response was, "There are **no** plans at this time for future additions, expansion, or further activity related to or connected with this proposal beyond sharing information about the new regulations with the public once they have been adopted."

Therefore, even though the sign code amendment was initiated in response to the changes required by a lawsuit, since the City staff have indicated a tank mural may be subject to the sign code, the District respectfully requests the addition of the following specific language that will exempt Public Agency murals from the Sign Code.

---

**Proposed City of Sammamish sign code amendments for Murals located on public agency facilities.**

The intent of the proposed amendments is to remove from sign code regulation murals located on District facilities, such as water reservoir murals. To do this, the District proposes the following amendments to SMC 21A.45.060 and SMC 21B.45.060:

**1. Proposed Amendments to Chapter 21A.45 SMC, "Signs"**

The District understands that a new section entitled "Permanent Signs" under SMC 21A.45.060 is being proposed as part of the City's sign code update. The District requests that the following sentence be added to proposed footnote 13 of SMC 21A.45.060, as shown in the following underlined text:

**21A.45.060 – Permanent Signs (table)**
* * *

Signs on Property with Public Agency Facilities – 13
* * *

13. See SMC 21A.15.915 for a list of permitted public agencies. <u>Murals located on public agency facilities, such as water reservoir murals, are exempted from the regulations under this chapter.</u>

**2. Proposed Amendments to Chapter 21B.45 SMC, "Signage" in Town Center**

The District proposes to add the following exemption to SMC 21B.45.060, Exempt Signs.
**21B.45.060 Exempt signs.** The following signs or displays are exempted from the regulations under this chapter.
* * *

<u>(7) Murals located on public agency facilities, such as water reservoir murals.</u>

---

Thank you for your consideration.

Sincerely

Jay Regenstreif, P.E.
Planning Engineer

c: Lyman Howard, City Manager

Sammamish Plateau Water

# Water Storage Tank Murals

Exhibit 7

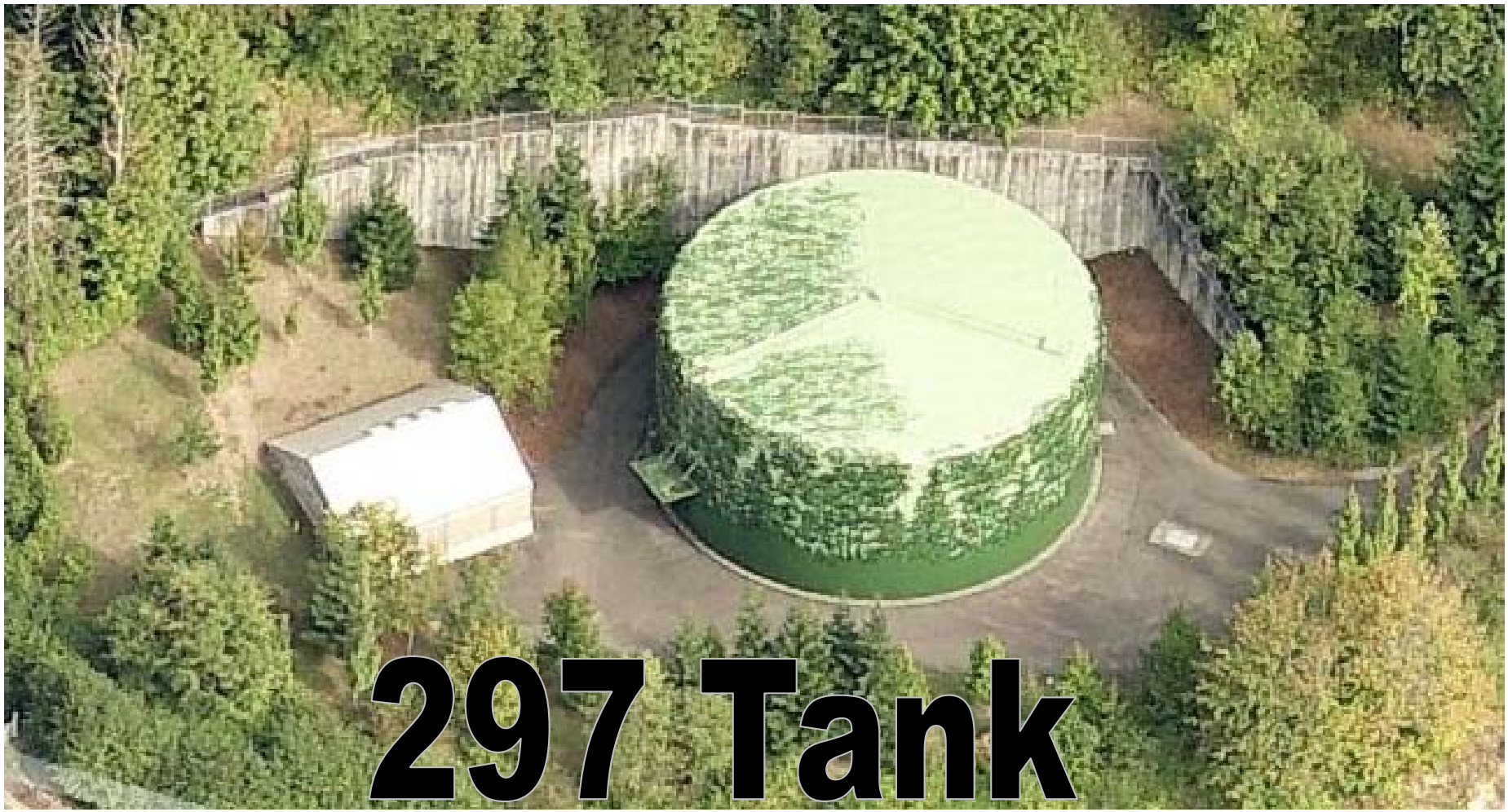


**2.25 Million Gallons**

EXHIBIT #1

Exhibit 7

EXHIBIT #1

Exhibit 7

EXHIBIT #1

Exhibit 7

EXHIBIT #1

Exhibit 7

EXHIBIT #1

Exhibit 7

EXHIBIT #1

Exhibit 7

**8 Million Gallons**

EXHIBIT #1

Exhibit 7

EXHIBIT #1

Exhibit 7

EXHIBIT #1

Exhibit 7

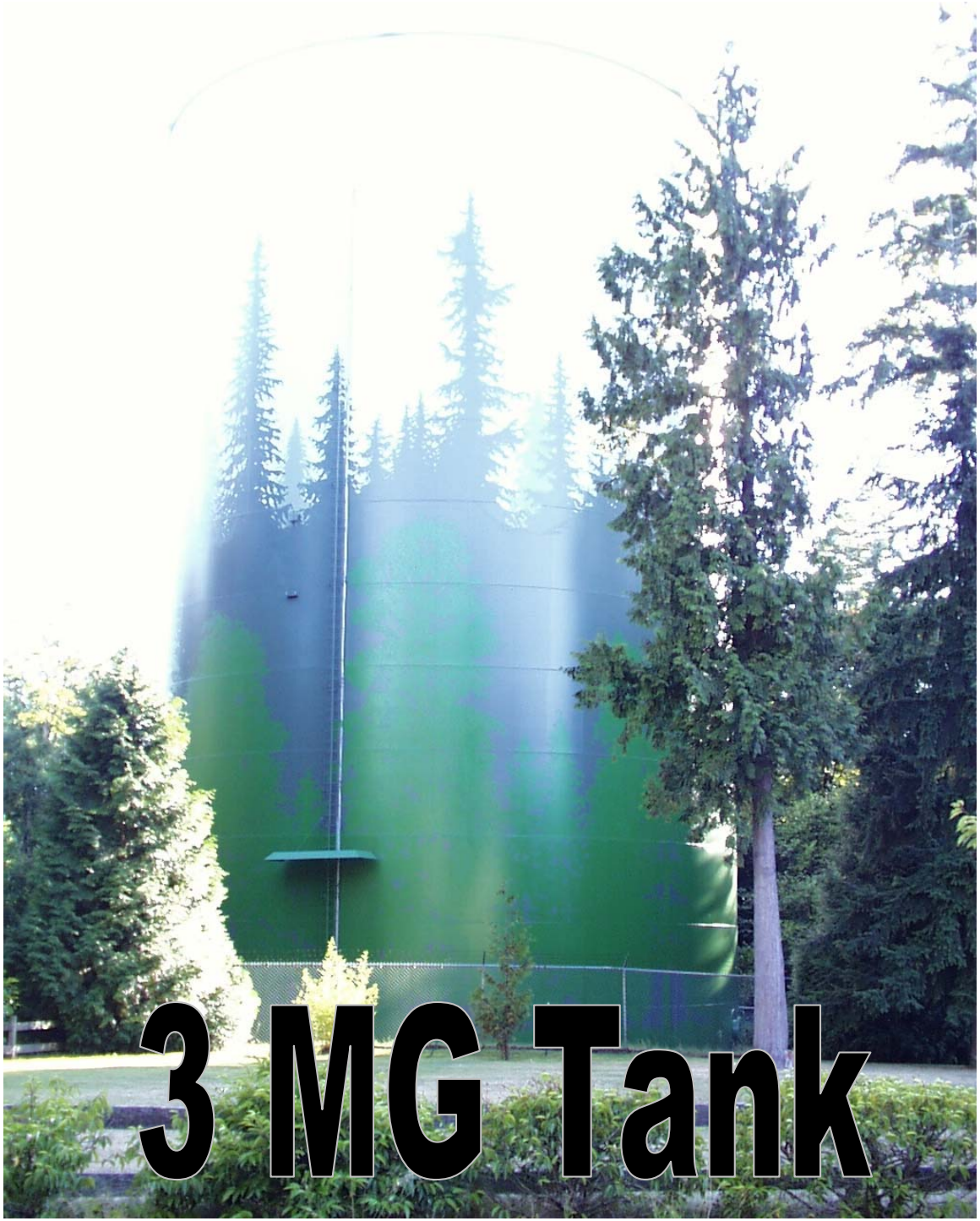


EXHIBIT #1

Exhibit 7

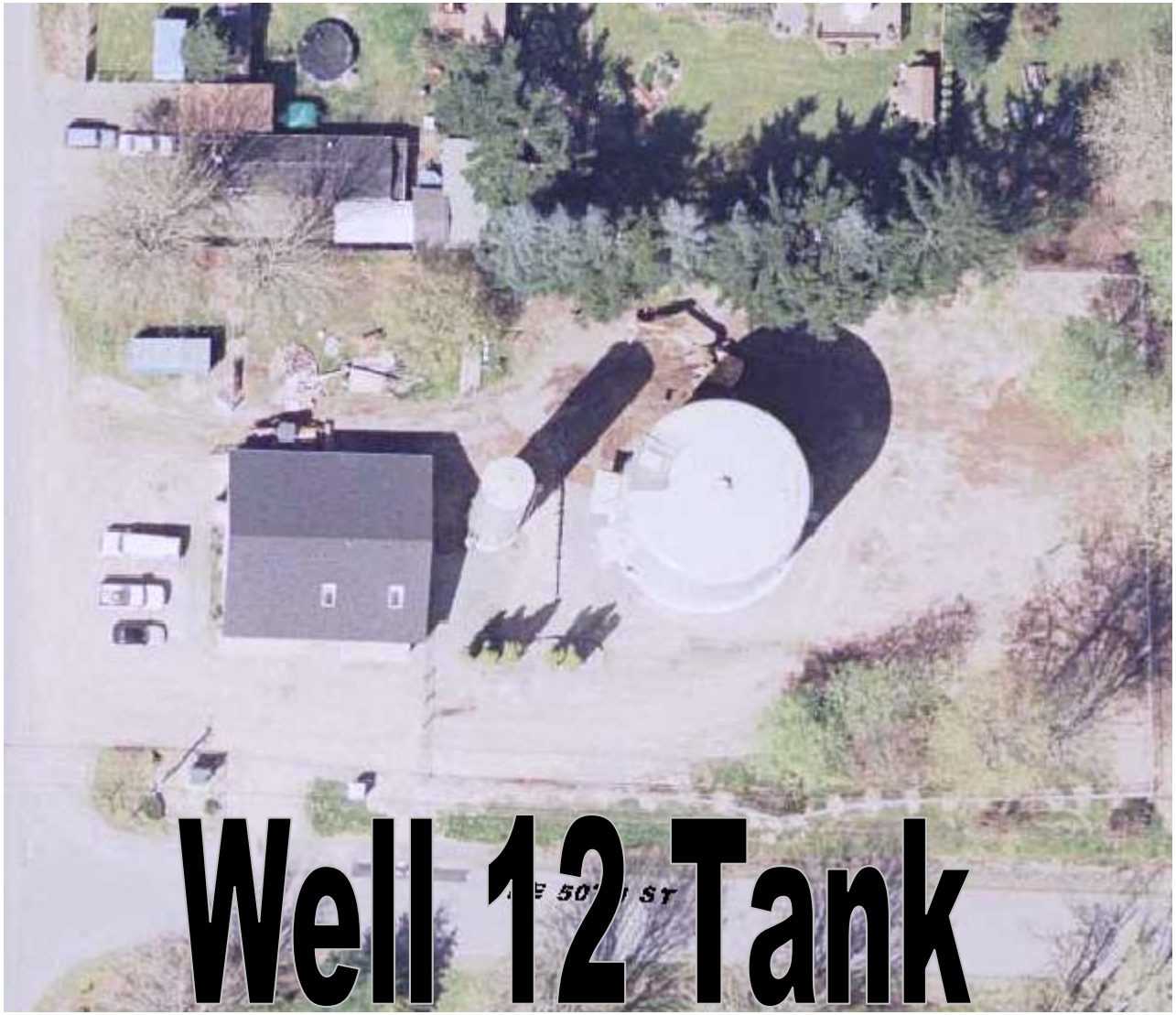


EXHIBIT #1

Exhibit 7

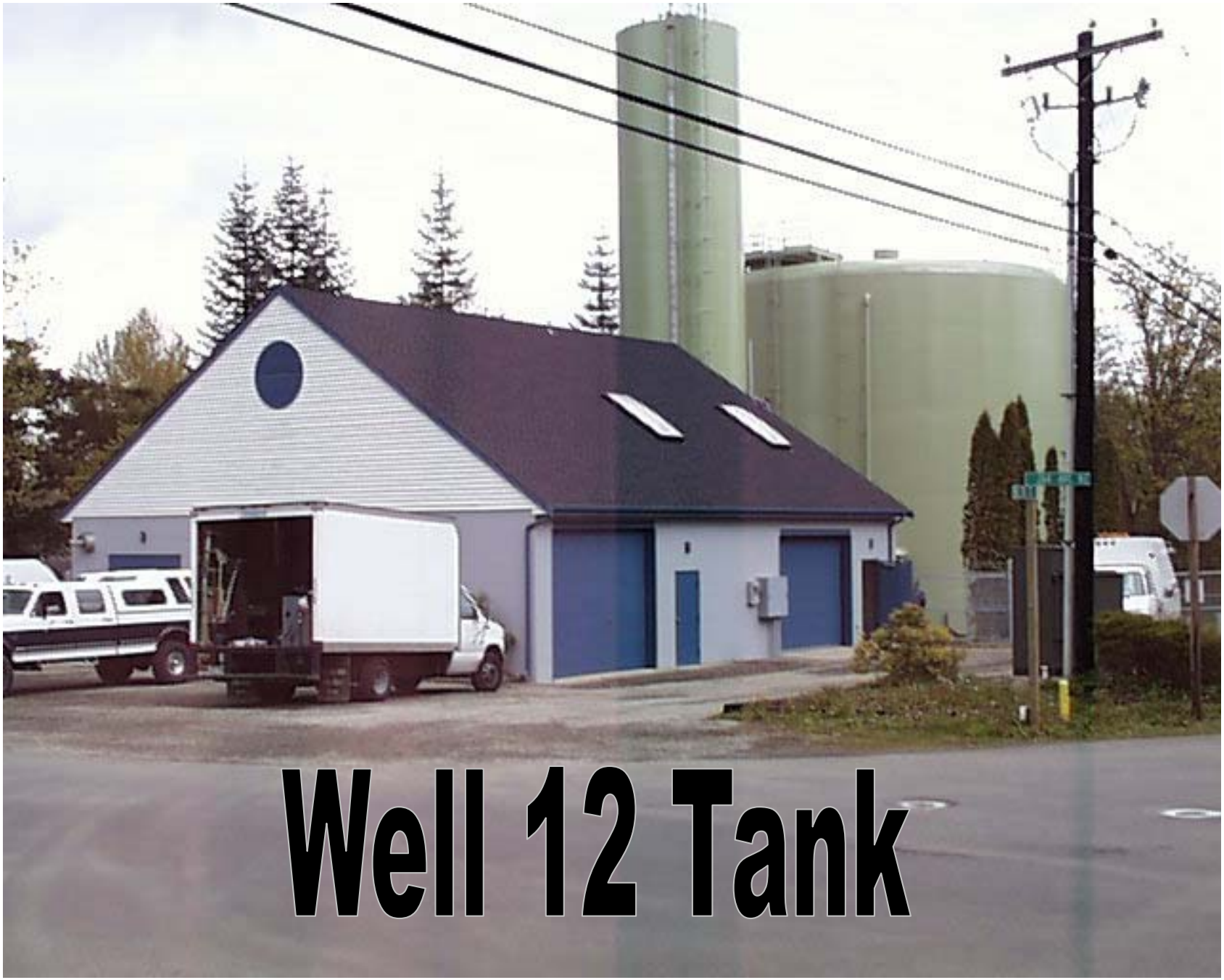


EXHIBIT #1

# City Council Agenda Bill

**Meeting Date:** May 2, 2017 Date Submitted: 4/26/2017

**Originating Department:** Public Works

**Clearances:**

- ☑ Attorney
- ☐ Community Development
- ☐ Public Safety
- ☐ Admin Services
- ☐ Finance & IT
- ☑ Public Works
- ☑ City Manager
- ☐ Parks & Recreation

**Subject:** Ordinance Reading Approving a fiber optic service non-exclusive franchise agreement between the City of Sammamish and the Zayo Group, LLC

**Action Required:** Conduct the first reading on an ordinance establishing a non-exclusive franchise agreement for a fiber-optic telecommunications system with the Zayo Group, LLC to install, construct, maintain, repair and operate a utility system within the public rights of way of the City of Sammamish.

**Exhibits:**

1. Ordinance granting the Zayo Group, LLC a non-exclusive franchise agreement with Exhibit A.

**Budget:** Not Applicable

**Summary Statement:**

This ordinance establishes a non-exclusive franchise agreement with the Zayo Group, LLC for a fiber-optic telecommunications system. Franchise agreements are powerful tools in managing the occupants within our public right of ways (ROW). These agreements outline the rules, rights, and fees associated with using public property for private purpose. By definition, franchise agreements are applicable for those rights of way occupants that provide services to the local community. Franchise agreements are important as they clearly define what a franchise can and cannot do within the City's ROW. Staff recommends that the Council adopt the Ordinance for the agreement entering into a franchise agreement with the Zayo Group, LLC.

**Background:**

Staff and the City Attorney have been working diligently with the Zayo Group, LLC on a new, non-exclusive franchise agreement for a telecommunications system.

Items to review relative to franchise agreements:

- A "Franchise Agreement" is adopted via an ordinance and grants a service provider general permission to enter, use, and occupy all or parts of the public rights-of-way (Streets, alleys, bridges, etc.) of the City for the purpose of construction, installing, maintaining, and operation of its facilities and equipment.

- There is no current franchise agreement with The Zayo Group.

**Financial Impact:**

There is no financial impact to the City.

**Recommended Motion:** Conduct first reading of the ordinance and take public comment. No action is recommended at this reading.

Exhibit 1

# CITY OF SAMMAMISH
## WASHINGTON
### ORDINANCE NO. O2017-___

---

**AN ORDINANCE OF THE CITY OF SAMMAMISH, WASHINGTON, GRANTING TO ZAYO GROUP, LLC, A NONEXCLUSIVE FRANCHISE TO INSTALL, CONSTRUCT, MAINTAIN, REPAIR, AND OPERATE A BROADBAND TELECOMMUNICATIONS SYSTEM WITHIN THE PUBLIC RIGHTS-OF-WAY; PROVIDING FOR SEVERABILITY; AND ESTABLISHING AN EFFECTIVE DATE**

WHEREAS, Zayo Group, LLC, a Delaware limited liability company ("Franchisee"), has applied to the City to construct, install, maintain, repair, and operate a fiber optic-based telecommunications system within the public rights-of-way of the City; and

WHEREAS, Franchisee represents that it has the legal, technical, and financial qualifications to operate in the rights-of-way of the City as a wireline telephone business and a telecommunications company within the meaning of Title 80 RCW; and

WHEREAS, based on representations and information provided by Franchisee, and in response to its request for the grant of a franchise, the City Council has determined that the grant of a nonexclusive franchise, on the terms and conditions herein and subject to applicable law, are consistent with the public interest; and

WHEREAS, the City is authorized by applicable law to grant such a nonexclusive franchises within the boundaries of the City;

**NOW, THEREFORE, THE CITY COUNCIL OF THE CITY OF SAMMAMISH, WASHINGTON, DO ORDAIN AS FOLLOWS:**

Table of Contents.


ARTICLE 1. DEFINITIONS

ARTICLE 2. FRANCHISE GRANT

2.1 Public Right-of-Way Use Authorized
2.2 Authorized Services
2.3 No Rights Shall Pass to Franchisee by Implication
2.4 Interest in the Public Right-of-Way; Release; Indemnity
2.5 Rights Subordinate

2.6 Condition of Franchise Area
2.7 Franchise Nonexclusive
2.8 Transfer
2.9 Street Vacation
2.10 Reservation of City Use of Public Right-of-Way

ARTICLE 3. COMPLIANCE WITH LAWS/ORDER OF PRECEDENCE

3.1 Alteration of Material Terms and Conditions
3.2 Compliance with Laws
3.3 Reservation of Rights/Wavier
3.4 Change in Form of Government

ARTICLE 4. ACCEPTANCE

4.1 Acceptance
4.2 Failure to Timely File Acceptance
4.3 Effective Date; Term
4.4 Effect of Acceptance
4.5 Effect of Expiration/Termination

ARTICLE 5. PROTECTION OF THE CITY AND PUBLIC

5.1 Limitation of Liability
5.2 Insurance Requirements – Attached Exhibit D
5.3 Financial Security – Attached Exhibit E
5.4 Contractors/Subcontractors
5.5 Liens
5.6 Financial Conditions

ARTICLE 6. ENFORCEMENT AND REMEDIES

6.1 Communications and Discussion
6.2 Remedies
6.3 Right to Cure Default
6.4 Termination/Revocation
6.5 Receivership

ARTICLE 7. GENERAL CONDITIONS UPON USE OF PUBLIC RIGHTS-OF-WAY

7.1 Regulatory Permit
7.2 Submission; Approval of Design Documents
7.3 Compliance with Standards/Codes
7.4 Conditions Precedent to Work
7.5 Work in the Public Rights-of-Way
7.6 Alterations

7.7 General Conditions
7.8 Facility Relocation at Request of the City
7.9 Movement of Facilities for Others
7.10 Movement of Facilities During Emergencies
7.11 Record of Installations
7.12 Restoration of Public Rights-of-Way, Public and Private Property
7.13 Approvals
7.14 Abandonment of Facilities

ARTICLE 8. MISCELLANEOUS

8.1 Headings
8.2 Entire Agreement
8.3 Incorporation of Exhibits
8.4 Calculation of Time
8.5 Time Limits Strictly Construed
8.6 No Joint Venture
8.7 Approval Authority
8.8 Binding Effect upon Successors and Assigns
8.9 Waiver
8.10 Severability
8.11 Signs
8.12 Discriminatory Practices Prohibited
8.13 Notice
8.14 Survival of Terms
8.15 Force Majeure
8.16 Attorneys' Fees
8.17 Venue/Choice of Law
8.18 Publication

EXHIBITS:

A. Form of Acceptance of Franchise
B. Form of Transfer Agreement
C. Description of Franchise Area
D. Insurance Requirements
E. Financial Security
F. Contractor/Subcontractor Insurance Requirements

ARTICLE 1. DEFINITIONS.

For the purposes of this Franchise and the Exhibits attached hereto, the following terms, phrases, words and their derivations where capitalized have the meanings given herein. Words not defined herein have the meaning given in Title 14 of the Sammamish Municipal Code. Words not defined herein or in Title 14 of the Sammamish Municipal

Code, have the meaning given pursuant to such federal or state statutes, rules, or regulations that apply to and regulate the services provided by the Franchisee. Words not otherwise defined have their common and ordinary meaning. When not inconsistent with the context, words used in the present tense include the future, words in the plural include the singular, and words in the singular include the plural. The word "shall" is always mandatory and not merely directory. References to governmental entities (whether persons or entities) refer to those entities or their successors in authority. If specific provisions of law, regulation, or rule referred to herein are renumbered, then the reference is intended to refer to the renumbered provision.

"Affiliate" when used in connection with Franchisee means any Person who owns or controls, is owned or controlled by, or is under common ownership or control with Franchisee.

"City" means the City of Sammamish, a municipal corporation organized as a non-charter code city, operating under the laws of the state of Washington.

"Construct" means to construct, reconstruct, install, reinstall, align, realign, locate, relocate, adjust, affix, attach, remove, or support.

"Default" means any failure of a Party to keep, observe, or perform any of its duties or obligations under this Franchise.

"Design Document(s)" means the plans and specifications for the Construction of the Facilities meeting the minimum applicable general plan submittal requirements for engineering services plan review as set forth in the City's Design Standards manual, illustrating and describing the refinement of the design of the Telecommunications System Facilities to be Constructed, establishing the scope, relationship, forms, size and appearance of the Facilities by means of plans, sections and elevations, typical construction details, location, alignment, materials, and equipment layouts. The Design Documents include specifications that identify utilities, major material and systems, Public Right-of-Way improvements, restoration and repair, and establish in general their quality levels.

"Direct Costs" means all costs and expenses incurred by the City that are directly related to a particular activity or activities, including by way of example:

i. All costs and expenses of materials, equipment, supplies, utilities, consumables, goods, and other items used or incorporated in connection with and in furtherance of such activity or activities, and any taxes, insurance, and interest expenses related thereto, including costs for crews and equipment;

ii. All costs and expenses of labor inclusive of payroll benefits, non-productive time, and overhead for each of the labor classifications of the employees performing work for the activity and determined in accordance with the City's ordinary governmental accounting procedures; and

iii. All costs and expenses to the City for any work by consultants or contractors to the extent performing work for a particular activity or activities including, by way of example and not limitation, engineering and legal services.

"Dispute" means a question or controversy that arises between the Parties concerning the observance, performance, interpretation, or implementation of any of the terms, provisions, or conditions contained in this Franchise or the rights or obligations of either Party under this Franchise.

"Effective Date" is defined at Section 4.3 herein.

"Emergency" means a sudden condition or set of circumstances that, (a) significantly disrupts or interrupts the operation of Facilities in the Public Rights-of-Way and Franchisee's ability to continue to provide services if immediate action is not taken, or (b) presents an imminent threat of harm to persons or property if immediate action is not taken.

"Environmental Law(s)" means any federal, state, or local statute, regulation, code, rule, ordinance, order, judgment, decree, injunction, or common law pertaining in any way to the protection of human health or the environment, including without limitation the Resource Conservation and Recovery Act, the Comprehensive Environmental Response, Compensation and Liability Act, the Toxic Substances Control Act, and any similar or comparable state or local law.

"Facility" or "Facilities" means any part or all of the facilities, equipment, and appurtenances of Franchisee whether underground or overhead and located within the Public Rights-of-Way as part of the Franchisee's Telecommunications System, including but not limited to conduit, case, pipe, line, fiber, cabling, equipment, equipment cabinets and shelters, vaults, generators, conductors, poles, carriers, drains, vents, guy wires, encasements, sleeves, valves, wires, supports, foundations, anchors, transmitters, receivers, antennas, and signage.

"Franchise" means the grant, once accepted, giving general permission to the Franchisee to enter into and upon the Public Rights-of-Way to use and occupy the same for the purposes authorized in this Franchise Ordinance, all pursuant and subject to the terms and conditions as set forth herein.

"Franchisee" means Zayo Group, LLC, and any of its Affiliates.

"Franchise Area" means collectively or individually the Public Rights-of-Way located within the area described in Exhibit "C".

"Franchise Ordinance" means this ordinance authorizing the Franchise.

"Hazardous Substance" means those substances which have been recognized as dangerous or potentially dangerous to health, welfare, or to the environment by any federal, municipal, state, City, or other governmental or quasi-governmental authority,

and/or any department or agency thereof; those substances which use, or have as its component thereof or therein, asbestos or lead-based paint; and petroleum oil and any of its fractions; and as the term has been defined, listed, or regulated under any Environmental Law.

"Law(s)" means all present and future applicable laws, ordinances, rules, regulations, resolutions, environmental standards, orders, decrees, and requirements of all federal, state, and local governments, the departments, bureaus or commissions thereof, or other governmental authorities, including the City acting in its governmental capacity. References to Laws shall be interpreted broadly to cover government actions, however nominated, and include laws, ordinances, and regulations now in force or hereinafter enacted or amended.

"Noticed Party" means the Party in receipt of notice that it is in Default.

"Person" means any individual, corporation, partnership, association, joint-stock-company, limited liability company, political subdivision, public corporation, taxing districts, trust, or any other legal entity, but not the City or any Person under contract with the City to perform work in the Public Rights-of-Way.

"Party(ies)" means either the City or the Franchisee or both.

"Private telecommunications system" means a telecommunications system controlled by a person or entity for the sole and exclusive use of such person, entity, or affiliate thereof, including the provision of private shared telecommunications services by such person or entity. "Private telecommunications system" does not include a system offered for hire, sale, or resale to the general public.

"Public Rights-of-Way" means the surface of, and the space above and below, any public street, highway, freeway, bridge, land path, alley, court, boulevard, sidewalk, way, lane, public way, drive, circle, or other public right-of-way, including any easement now or hereafter held by the City, within the corporate boundaries of the City as now or hereafter constituted for the purpose of public travel, and over which the City has authority to grant permits, licenses, or franchises for use thereof, or has regulatory authority over. "Public Rights-of-Way" excludes railroad rights-of-way, airports, harbor areas, buildings, parks, poles, conduits, and such similar facilities or property owned, maintained, or leased by the City in its proprietary capacity or as an operator of a utility.

"Public Works Director" means the Public Works Director for the City or his or her designee or such officer or person who has been assigned the duties of public works director or his or her designee.

"Regulatory Permit" means a permit issued under the regulatory authority of the City that provides specific requirements and conditions for Work to Construct Facilities within the Public Rights-of-Way and includes, by way of example and not limitation, a

construction permit, building permit, street excavation permit, barricade permit, and clearing and grading permit.

"Remedy", "Remediate", and "Remedial Action" have the same meaning as they are given under the Model Toxics Control Act (Chapter 70.105D RCW) and its implementing regulations at Chapter 173-340 WAC.

"Service" means the service or services authorized to be provided by the Franchisee under the terms and conditions of this Franchise.

"Telecommunications Service" means the electronic transmission, conveyance, or routing of voice, data, audio, video, or any other information or signals to a point, or between or among points. Telecommunications Service includes such transmission, conveyance, or routing in which computer processing applications are used to act on the form, code, or protocol of the content for purposes of transmission, conveyance, or routing without regard to whether such service is referred to as voice over internet protocol services or is classified by the federal communications commission as enhanced or value added. Telecommunications Service excludes radio and television audio and video programming services, regardless of the medium, including the furnishing of transmission, conveyance, and routing of such services by the programming service provider. Radio and television audio and video programming services include but are not limited to cable service as defined in 47 U.S.C. Sec. 522(6) and audio and video programming services delivered by commercial mobile radio service providers, as defined in section 20.3, Title 47 C.F.R.

"Transfer" means any transaction in which all or a portion of the Telecommunications System is sold, leased, or assigned (except a sale or transfer that results in removal of a particular portion of the Telecommunications System from the Public Rights-of-Way); or the rights and/or obligations held by the Franchisee under the Franchise are transferred, sold, assigned, or leased, in whole or in part, directly or indirectly, to another Person. A transfer of control of an operator is not a Transfer as long as the same person continues to hold the Franchise both before and after the transfer of control.

"Telecommunications System" means collectively the Facilities that together with other facilities, appurtenances, and equipment of Franchisee or other Persons are used to provide Telecommunications Services.

"Work" means any and all activities of the Franchisee, or its officers, directors, employees, agents, contractors, subcontractors, volunteers, invitees, or licensees, within the Public Rights-of-Way to Construct the Facilities.

ARTICLE 2. FRANCHISE GRANT.

2.1 Public Right-of-Way Use Authorized. Subject to the terms and conditions of this Franchise, the City hereby grants to Franchisee a nonexclusive Franchise authorizing

the Franchisee to Construct, maintain, repair, and operate Facilities in, along, among, upon, across, above, over, and under the Public Rights-of-Ways located within the Franchise Area.

2.2 Authorized Services. Franchisee may use the Public Rights-of-Way to Construct, maintain, repair and operate its Facilities as part of its Telecommunications System to provide Telecommunications Services. This authorization is limited and is not intended nor may it be construed as granting Franchisee or any other Person the right, duty, or privilege to use its Facilities or the Public Rights-of-Way to provide Services not specifically authorized herein. This Franchise does not prevent the City from lawfully imposing additional conditions, including additional compensation conditions, if authorized by applicable law for use of the Public Rights-of-Way, should Franchisee provide Service other than Service specifically authorized herein. However, this Franchise shall not be read as a concession by the Franchisee that it needs authorization to provide any services not otherwise authorized herein. Notwithstanding the foregoing, this Franchise does not authorize Franchisee to provide cable service as defined in 47 U.S.C. Sec. 522(6). Franchisee understands and acknowledges that a separate franchise, or amendment to this Franchise, is required for the provision of cable service.

2.3 No Rights by Implication. No rights pass to the Franchisee by implication. Without limiting the foregoing and by way of example, this Franchise does not include or substitute for:

2.3.1 Any other authorization required for the privilege of transacting and carrying on a business within the City that may be lawfully required by the Laws of the City;

2.3.2 Any Regulatory Permit required by the City for Public Rights-of-Way users in connection with operations on or in Public Rights-of-Way or public property; or

2.3.3 Any licenses, leases, easements, or other agreements for occupying any other property or infrastructure of the City or other Persons to which access is not specifically granted by this Franchise including, without limitation, agreements for placing devices on poles, light standards, in conduits, in vaults, in or on pipelines, or in or on other structures or public buildings.

2.3.4 Any permits or other authorizations that may be required under the land use code and development regulations of the City for the construction of Facilities within a particular zoning district in the City, including by way of example and not limitation, a conditional use permit or a variance.

2.4 Interest in the Public Right-of-Way/Release/Indemnity. This Franchise does not convey title, equitable or legal, in the Public Rights-of-Way. This Franchise shall not be deemed to grant more than those rights which the City has the undisputed right and power to give. The grant given herein does not confer rights other than as expressly provided in the grant and is subject to the limitations in applicable Law. Such right may

not be subdivided or subleased to a person other than the Franchisee except as set forth in Section 2.8 below.

CITY DOES NOT WARRANT ITS TITLE OR PROPERTY INTEREST IN OR TO ANY FRANCHISE AREA NOR UNDERTAKE TO DEFEND FRANCHISEE IN THE PEACEABLE POSSESSION OR USE THEREOF. NO COVENANT OF QUIET ENJOYMENT IS MADE.

Franchisee hereby releases City from any and all liability, cost, loss, damage or expense in connection with any claims that City lacked sufficient legal title or other authority to convey the rights described herein. If Franchisee or Franchisee's contractors are evicted by anyone owning or claiming title to, or any interest in the Franchise Area, City is not liable to Franchisee or Franchisee's contractors for any costs, losses, or damages of any Party.

2.5 Rights Subordinate. Franchisee further acknowledges that Franchisee's rights under this Franchise to Construct Facilities in the Franchise Area, are subject and subordinate to all outstanding rights and encumbrances on the City's Public Rights-of-Way.

2.6 Condition of Franchise Area. Franchisee has inspected or will inspect the Franchise Area described on the attached Exhibit C, and enters upon each such Franchise Area with knowledge of its physical condition and the danger inherent in operations conducted in, on, or near any Franchise Area. Franchisee acknowledges that Hazardous Substances or other adverse matters may affect the Franchise Area that were not revealed by Franchisee's inspection.

CITY HEREBY DISCLAIMS ANY REPRESENTATION OR WARRANTY, WHETHER EXPRESS OR IMPLIED, AS TO THE DESIGN OR CONDITION OF THE FRANCHISE AREA, INCLUDING THE ENVRONMENTAL CONDITION OF THE FRANCHISE AREA, ITS MERCHANTABILITY OR FITNESS FOR ANY PARTICULAR PURPOSE, THE QUALITY OF THE MATERIAL OR WORKMANSHIP OF THE PUBLIC RIGHT-OF-WAY, OR THE CONFORMITY OF ANY PART OF THE PUBLIC RIGHT-OF-WAY TO ITS INTENDED USES. CITY IS NOT RESPONSIBLE TO FRANCHISEE OR ANY OF FRANCHISEE'S CONTRACTORS FOR ANY DAMAGES RELATING TO THE DESIGN, CONDITION, QUALITY, SAFETY, MERCHANTABILITY, OR FITNESS FOR ANY PARTICULAR PURPOSE OF ANY PART OF THE PUBLIC RIGHT-OF-WAY PRESENT ON OR CONSTITUTING ANY FRANCHISE AREA, OR THE CONFORMITY OF ANY SUCH PROPERTY TO ITS INTENDED USES, EXCEPT TO THE EXTENT ANY DAMAGES RELATING TO THE CONDITION, QUALITY, OR SAFETY OF ANY PART OF THE PUBLIC RIGHT-OF-WAY ARISE FROM THE CITY'S GROSS NEGLIGENCE OR WILLFUL MISCONDUCT.

2.7 Franchise Nonexclusive. This Franchise IS nonexclusive. Subject to the terms and conditions herein, the City may at any time grant authorization to others to use the

Public Rights-of-Way for any lawful purpose on terms and conditions that are competitively neutral and nondiscriminatory among similarly situated franchisees. No other Person holding a valid franchise has superior rights to Franchisee to use and occupy the space within the Public Right-of-Way lawfully occupied by Franchisee Facilities, except as provided pursuant to Section 7.8 (Facility Relocation) hereof.

2.8 Transfer. Franchisee may Transfer this Franchise after prior written notice to the City and Transferee's written commitment, in substantially the form of the agreement attached hereto as Exhibit "B", delivered to the City, that transferee(s) will thereafter be responsible for all obligations of Franchisee with respect to the Franchise and guaranteeing performance under the terms and conditions of the Franchise and that transferees will be bound by all the conditions of the Franchise and will assume all the obligations of its predecessor. Such a Transfer shall relieve the Franchisee of any further obligations under the Franchise, including any obligations not fulfilled by Franchisee's Transferee; but the Transfer shall not in any respect relieve the Franchisee, or any of its successors in interest, of responsibility for acts or omissions, known or unknown, or the consequences thereof, which acts or omissions occur prior to the time of the Transfer. This Franchise may not be transferred without filing or establishing with the City the insurance certificates, security fund, and performance bond as required pursuant to this Franchise and paying all Direct Costs to the City related to the Transfer.

Notwithstanding the foregoing, notice to the City is not required for a mortgage, hypothecation, or an assignment of Franchisee's interest in the Franchise in order to secure indebtedness.

Franchisee may, without the prior written notice to or consent of the City: (i) lease the Telecommunications System, or any portion thereof, to another Person; (ii) grant an Indefeasible Right of User Interest in the Telecommunications System, or any portion thereof, to another Person; or (iii) offer or provide capacity or bandwidth in its Telecommunications System to another Person; provided that, Franchisee at all times retains exclusive control over its Telecommunications System and remains responsible for Constructing its Facilities pursuant to the terms and conditions of this Franchise, and provided further that, Franchisee may grant no rights to any such Person that are greater than any rights Franchisee has pursuant to this Franchise; such Persons shall not be construed to be a third-party beneficiary hereunder; and, no such Person may use the Telecommunications System for any purpose not authorized herein.

2.9 Street Vacation. If any Public Right-of-Way or portion thereof used by Franchisee is to be vacated during the term of this Franchise, unless as a condition of such vacation the Franchisee is granted the right to continue to occupy the vacated Public Right-of-Way, Franchisee shall, without delay or expense to City, remove its Facilities from such Public Right-of-Way, and restore, repair, or reconstruct the Public Right-of-Way where such removal has occurred, and place the Public Right-of-Way in such condition as may be required by the City. Nothing herein is intended to operate as a waiver of Franchisee's right or entitlement under state law or City ordinance to receive notice of or to object to vacation of the Public Right-of-Way occupied by Franchisee Facilities.

2.10 Reservation of City Use of Public Right-of-Way. Nothing in this Franchise prevents the City from constructing sanitary or storm sewers; grading, changing grade, paving, repairing, widening or otherwise altering any Public Right-of-Way; laying down, repairing or removing water mains; or installing conduit or fiber optic cable.

ARTICLE 3. COMPLIANCE WITH LAWS/ORDER OF PRECEDENCE.

3.1 Alteration of Material Terms and Conditions. Subject to federal and State preemption, the material rights, benefits, obligations or duties as specified in this Franchise may not be unilaterally altered or impaired by the City through subsequent amendments to, or enactment of, any ordinance, regulation, resolution, or other enactment of the City. Notwithstanding the foregoing, the City specifically reserves its right to make and enforce those laws that are within the lawful exercise of the City's police power.

3.2 Compliance with Laws. Except as provided herein pursuant to Section 3.1, the Franchisee agrees to comply with all applicable Laws as now or hereafter in effect, and any lawful orders from regulatory agencies or courts with jurisdiction over Franchisee and its Facilities, or over the City and the Public Rights-of-Way.

3.3 Reservation of Rights/Wavier. The City expressly reserves all of its rights, authority, and control arising from any relevant provisions of federal, State, or local Laws granting the City rights, authority, or control over the Public Rights-of-way or the activities of the Franchisee.

3.4 Change in Form of Government. Any change in the form of government of the City shall not affect the validity of this Franchise. Any governmental unit succeeding the City shall, without the consent of Franchisee, succeed to all of the rights and obligations of the City provided in this Franchise.

ARTICLE 4. ACCEPTANCE.

4.1 Acceptance. Within thirty (30) days after the passage and approval of this Franchise by the City Council, Franchisee must accept this Franchise by filing with the City Clerk during regular business hours, or to the City Attorney, three originals of this Franchise with its original signed and notarized written acceptance of all of the terms, provisions, and conditions of this Franchise in conformance with Exhibit "A", together with the following items, or else this Franchise is void:

4.1.1 Payment in readily available funds of the administrative costs for issuance of the Franchise in conformance with the requirements of Section 5.6 herein.

4.1.2 Submission of proof of financial security in accordance with Section 5.3 herein.

4.1.3 Submission of an insurance certificate in accordance with Section 5.2 herein.

4.1.4 Payment of the costs of publication of this Franchise Ordinance in conformance with the requirements of Section 8.18 herein.

In the event that the thirtieth day falls on a Saturday, Sunday or legal holiday during which the City is closed for business, the filing date shall fall on the last business day before such Saturday, Sunday or legal holiday.

4.2 Failure to Timely File Acceptance. Franchisee's failure to timely file its written acceptance will be deemed a rejection by Franchisee, and this Franchise will then be void.

4.3 Effective Date; Term.

4.3.1 Effective Date. Except as provided pursuant to Section 4.2 of this Franchise, this Ordinance and Franchise take effect at 12:01 a.m. on the day following Franchisee's acceptance under Section 4.1, or on the sixth day after the City Council's adoption of this Franchise Ordinance, whichever occurs later ("Effective Date").

4.3.2 Term. The Term of this Franchise is ten (10) years from the Effective Date, unless sooner terminated, revoked, or rendered void. No more than one hundred eighty (180) days prior to expiration, the Parties may mutually agree in writing to extend the term of this Franchise for an additional five (5) year term upon the same terms and conditions as provided herein. The City Manager is authorized to execute such an extension on behalf of the City without further action or approval by the City Council.

4.4 Effect of Acceptance. By accepting the Franchise, the Franchisee:

4.4.1 Accepts and agrees to comply with and abide by all of the lawful terms and conditions of this Franchise;

4.4.2 Acknowledges and agrees that it has carefully read the terms and conditions of this Franchise; it unconditionally accepts all of the terms and conditions of this Franchise; it unconditionally agrees to abide by the same; it has relied upon its own investigation of all relevant facts; it has had the assistance of counsel; it was not induced to accept a Franchise; and this Franchise represents the entire agreement between the Franchisee and the City;

4.4.3 Warrants that Franchisee has full right and authority to enter into and accept this Franchise in accordance with the terms hereof, and by entering into or performing this Franchise, Franchisee is not in violation of its charter or by-laws, or any law, regulation, or agreement by which it is bound or to which it is subject; and

4.4.4 Warrants that Franchisee has full right and authority to enter into and accept this Franchise in accordance with the terms hereof, that the signatories for Franchisee hereto are authorized to sign the Franchise acceptance, and that the joinder or

consent of any other party, including a court, trustee, or referee, is not necessary to make valid and effective the execution, delivery, and performance of this Franchise.

4.5 Effect of Expiration/Termination. Upon expiration, revocation or termination of the Franchise without renewal or other authorization, Franchisee will no longer be authorized to operate the Facilities within the Franchise Area and shall, to the extent it may lawfully do so, cease operation of the Facilities. Forthwith thereafter, except as provided in this Section, or as otherwise provided by ordinance, Franchisee shall: (1) remove its Facilities from the Public Rights-of-Ways and restore the Public Right-of-Way in accordance with Section 7.12.1 (Restoration of Public Rights-of-Way) hereof; (2) sell its Facilities to another entity authorized to operate Facilities within the Franchise Area (which may include the City) in accordance with the transfer provisions under Section 2.8; or (3) abandon any Facilities in place in the Public Rights-of-Way in accordance with Section 7.14 (Abandonment of Facilities) hereof.

ARTICLE 5. PROTECTION OF THE CITY AND PUBLIC.

5.1 Limitation of Liability.

5.1.1 INDEMNITY/RELEASE/DEFENSE. TO THE FULLEST EXTENT PERMITTED BY LAW, FRANCHISEE RELEASES, INDEMNIFIES, DEFENDS, AND HOLDS HARMLESS THE CITY AND THE CITY'S SUCCESSORS, ASSIGNS, LEGAL REPRESENTATIVES, OFFICERS (ELECTED OR APPOINTED), EMPLOYEES, VOLUNTEERS, AND AGENTS (COLLECTIVELY, "**INDEMNITEES**") FOR, FROM, AND AGAINST ALL CLAIMS, LIABILITIES, FINES, PENALTIES, COSTS, DAMAGES, LOSSES, LIENS, CAUSES OF ACTION, SUITS, DEMANDS, JUDGMENTS, AND EXPENSES (INCLUDING, WITHOUT LIMITATION, COURT COSTS, REASONABLE ATTORNEYS' FEES, AND COSTS OF INVESTIGATION, REMOVAL AND REMEDIATION, AND GOVERNMENTAL OVERSIGHT COSTS), ENVIRONMENTAL OR OTHERWISE (COLLECTIVELY "**LIABILITIES**") ARISING OUT OF, RESULTING FROM, OR RELATED TO (IN WHOLE OR IN PART):

5.1.1.1 FRANCHISEE'S OCCUPATION AND USE OF THE PUBLIC RIGHT-OF-WAY;

5.1.1.2 FRANCHISEE'S OPERATION OF THE TELECOMMUNICATIONS SYSTEM;

5.1.1.3 ENVIRONMENTAL CONTAMINATION OF THE PUBLIC RIGHTS-OF-WAY CAUSED BY, AGGRAVATED BY, OR CONTRIBUTED TO, IN WHOLE OR IN PART, BY FRANCHISEE OR ITS CONTRACTORS, SUBCONTRACTORS, OR AGENTS (BUT ONLY TO THE EXTENT OF SUCH AGGRAVATION OR CONTRIBUTION); AND

5.1.1.4 ANY ACT OR OMISSION OF FRANCHISEE OR FRANCHISEE'S CONTRACTORS, SUBCONTRACTORS, AGENTS, SERVANTS,

OFFICERS, OR EMPLOYEES IN CONNECTION WITH WORK IN THE PUBLIC RIGHTS-OF-WAY.

THE ONLY LIABILITIES WITH RESPECT TO WHICH FRANCHISEE'S OBLIGATION TO RELEASE AND INDEMNIFY THE INDEMNITEES DOES NOT APPLY ARE LIABILITIES TO THE EXTENT PROXIMATELY CAUSED BY THE GROSS NEGLIGENCE OR INTENTIONAL MISCONDUCT OF AN INDEMNITEE OR FOR LIABILITIES THAT BY LAW THE INDEMNITEES CANNOT BE INDEMNIFIED FOR.

This covenant of indemnification includes, but is not limited to, Liabilities arising (1) as a result of the negligent acts or omissions of Franchisee, its agents, servants, officers, or employees in barricading, instituting trench safety systems, or providing warnings of any excavation, construction, or work in any public Rights-of-Way or other public place in performance of work or services Permitted under this Franchise; and (2) solely by virtue of the City's ownership or control of the Public Rights-of-Way or other public properties occupied or used by Franchisee.

The fact that Franchisee carries out any activities under this Franchise through independent contractors is not a defense to Franchisee's duties of defense and indemnification under this Section 5.1.

5.1.2 Tender of Defense. Upon written notice from the City, Franchisee agrees to assume the defense of any lawsuit, claim, or other proceeding brought against any Indemnitee by any entity, relating to any matter covered by this Franchise for which Franchisee has an obligation to assume liability for and/or save and hold harmless any Indemnitee. Franchisee shall pay all costs incident to such defense, including, but not limited to, attorneys' fees, investigators' fees, litigation and appeal expenses, settlement payments, and amounts paid in satisfaction of judgments. Further, said indemnification obligations shall extend to claims that are not reduced to a suit and any claims which may be compromised prior to the culmination of any litigation or the institution of any litigation. The City has the right to defend and may participate in the defense of a claim and, in any event, Franchisee may not agree to any settlement of claims financially affecting the City without the City's prior written approval which shall not be unreasonably withheld. If separate representation to fully protect the interests of both Parties is necessary, such as a conflict of interest between the City and the counsel selected by Franchisee to represent the City, Franchisee shall select additional counsel with no conflict with the City. Franchisee's indemnification obligations do not apply to any lawsuit, claim, or proceeding, including any settlement or compromise of a claim that is not reduced to a suit, if the City fails to provide timely notice to Franchisee and the delay in providing notice causes prejudice to Franchisee, or if City enters into a settlement or compromise, or consents to entry of judgment, without Franchisee's prior written consent.

5.1.3 Refusal to Accept Tender. If Franchisee refuses the tender of defense in any suit or claim, the tender having been made pursuant to the indemnification clauses contained herein, and the refusal is subsequently determined by a court having

jurisdiction (or such other tribunal that the Parties agree to decide the matter) to have been a wrongful refusal on the part of Franchisee, then Franchisee shall pay all of the City's costs for defense of the action, including all reasonable expert witness fees and reasonable attorneys' fees and the reasonable costs of the City, including reasonable attorneys' fees of recovering under this indemnification clause.

5.1.4 Title 51 Waiver. THE FRANCHISEE WAIVES IMMUNITY UNDER RCW TITLE 51 AND AFFIRMS THAT THE CITY AND THE FRANCHISEE HAVE SPECIFICALLY NEGOTIATED THIS PROVISION, AS REQUIRED BY RCW 4.24.115, TO THE EXTENT IT MAY APPLY.

5.1.5 Inspection. Inspection or acceptance by the City of any Work performed by Franchisee at the time of completion of construction is not grounds for avoidance of any of these covenants of indemnification.

5.2 Insurance Requirements. See Attached Exhibit "D".

5.3 Financial Security. See Attached Exhibit "E".

5.4 Contractors/Subcontractors. Franchisee contractors and subcontractors performing Work in the Public Rights-of-Way shall comply with such bond, indemnity, and insurance requirements as may be required by City code or regulations, or other applicable Law. If no such requirements are set forth in the City code or regulations, the Franchisee contractors and subcontractors shall comply with the requirements set forth in attached Exhibit "F".

5.5 Liens. In the event that any City property becomes subject to any claims for mechanics', artisans', or materialmen's liens, or other encumbrances chargeable to or through Franchisee which Franchisee does not contest in good faith, Franchisee shall promptly, and in any event within 30 days from receipt of written notice of such lien, cause such lien claim or encumbrance to be discharged or released of record (by payment, posting of bond, court deposit, or other means), without cost to the City, and shall indemnify the City against all costs and expenses (including attorneys' fees) incurred in discharging and releasing such claim of lien or encumbrance. If any such claim or encumbrance is not so discharged and released, the City may pay or secure the release or discharge thereof at the expense of Franchisee after first giving Franchisee five business days' advance notice of its intention to do so. Nothing herein precludes Franchisee's or the City's contest of a claim for lien or other encumbrance chargeable to or through Franchisee or the City, or of a contract or action upon which the same arose.

5.6 Financial Conditions.

5.6.1 Franchise Fees. During the term of this Franchise, should federal and/or state Law change or the statutory prohibition or limitation upon assessment of Franchise fees be invalidated, amended, or modified allowing revenues derived by Franchisee from any Services provided by Franchisee using the Franchise Area to be subject to a Franchise fee or other fee in lieu of a Franchise fee that was otherwise

prohibited or limited on the Effective Date, the City and Franchisee shall in good faith endeavor to negotiate a reasonable Franchise fee or other fee or other consideration in lieu of a Franchise fee, consistent with federal and/or state Law. The fee or other consideration shall be comparable to Franchise or similar fees received by the City, or other cities of comparable population or assessed property value, for other similar uses of the Public Rights-of-Way by similar users.

5.6.2 Reimbursement of Direct Costs of Application, Negotiation, Amendment, Administration, and Renewal. In addition to an initial application fee of $5,000, Franchisee shall reimburse the City for all other Direct Costs of the City relating to the negotiation, amendment (if requested by or for the benefit of the Franchisee), and administration of this Franchise; but Franchisee's annual reimbursement of Direct Costs shall not exceed $3,000 in any calendar year of the initial ten (10) year term of this Franchise. In the event of renewal, the Parties shall renegotiate the annual reimbursement cap on the City's Direct Costs.

5.6.3 Reimbursement of Direct Costs of Design Review and Inspection. City approvals and inspections, as provided for in this Franchise, are for the sole purpose of protecting the City's rights as the owner or manager of the road Public Rights-of-Way and are separate and distinct from the approvals and inspections and fees that may be required pursuant to a Regulatory Permit. Therefore, Franchisee shall reimburse to the City, its Direct Costs of approvals and inspections, to the extent that such Direct Costs are not included in the costs for issuance of and compliance with a Regulatory Permit. Approvals and inspection include, by way of example and not limitation, review of design documents and inspection for compliance with Standards and Design Document submittal.

5.6.4 Franchisee Responsibility for Costs. Except as expressly provided otherwise in this Franchise, any act that Franchisee or its contractors or subcontractors are required to perform under this Franchise shall be performed at their sole cost and expense.

5.6.5 Franchisee Work Performed by the City. Any work performed by the City that Franchisee has failed to perform as required pursuant to this Franchise and which is performed by the City in accordance with the terms of this Franchise, shall be performed at the cost and expense of the Franchisee. Franchisee shall pay the Direct Costs to the City for performing such work.

5.6.6 Costs to be Borne by Franchisee. Franchisee shall reimburse the City for all costs of publication of this Franchise, and any notices prior to any public hearing regarding this Franchise, contemporaneous with its acceptance of this Franchise.

5.6.7 Taxes and Fees. Nothing contained in this Franchise Agreement exempts Franchisee from Franchisee's obligation to pay any utility tax, business tax, or ad valorem property tax, now or hereafter levied against real or personal property within the City, or against any local improvement assessment imposed on Franchisee. Any fees,

charges, and/or fines provided for in the City Municipal Code or any other City ordinance, whether pecuniary or in-kind, are separate from, and additional to, any and all federal, state, local, and City taxes as may be levied, imposed, or due from Franchisee.

5.6.8 Itemized Invoice. Upon request and as a condition of payment by the Franchisee of Direct Costs payable by Franchisee under this Franchise, City shall submit an itemized billing so as to specifically identify the Direct Costs incurred by the City for each project for which the City claims reimbursement.

5.6.9 Time for Payment. All non-contested amounts owing shall be due and paid within sixty (60) days of receipt of invoice, or itemized invoice if requested; provided that, in the event that an itemized invoice is not provided at the time of receipt of invoice and the City receives a request from Franchisee for an itemized invoice within 30 days of receipt of invoice, such amounts shall be due and paid within sixty (60) days of receipt of the itemized invoice.

5.6.10 Overdue Payments. Any amounts payable under this Franchise by Franchisee which are not paid upon the due date thereof shall bear interest at the lower of (x) the maximum interest rate allowed by law, and (y) a rate of twelve (12%) percent per annum.

5.6.11 Contesting charges. Franchisee may contest all or parts of amounts owed within sixty (60) days of receipt of any invoice. The City will investigate Franchisee's contest and will make appropriate adjustments to the invoice, if necessary, and resubmit the invoice to Franchisee. Franchisee shall pay any amounts owning as itemized in the resubmitted invoice which amounts shall be due within thirty (30) days of receipt of the resubmitted invoice. However, Franchisee does not waive its rights to further dispute resolution processes pursuant to Section 6.1 of this Franchise. Submittal of a dispute over amounts owing pursuant to Section 6.1 does not relieve the Franchisee of its obligation to pay amounts due under the resubmitted invoice.

5.6.12 Receivables. Either Party hereto may assign any monetary receivables due them under this Franchise upon notice to the other, but (i) such transfer will not relieve the assignor of any of its rights or obligations under this Franchise, and (ii) Franchisee will have no notice obligation with respect to any receivables other than those owed by the City.

## ARTICLE 6. ENFORCEMENT AND REMEDIES.

6.1 Communication and Discussion. The Parties are fully committed to working with each other throughout the term of this Franchise and agree to communicate regularly with each other at all times so as to avoid or minimize Disputes. The Parties agree to act in good faith to prevent and resolve potential sources of conflict before they escalate into a Dispute. The Parties each commit to resolving a Dispute in an amicable, professional and expeditious manner.

The Parties further agree that in the event a Dispute arises, they will attempt to resolve it through discussions between representatives of each Party. Each Party will exchange relevant information that will assist the Parties in resolving the Dispute.

6.2 Remedies. The Parties have the right to seek any and all remedies, in equity, at law, or in contract. Remedies are cumulative; the exercise of one does not foreclose the exercise of others. No provision of this Franchise bars either Party from seeking appropriate judicial relief.

Neither the existence of other remedies identified in this Franchise nor the exercise thereof bar or otherwise limit the right of either Party to recover monetary damages, as allowed under applicable Law, or to seek and obtain judicial enforcement by means of specific performance, injunctive relief, or mandate, or to commence an action for equitable or other relief and/or proceed against the other Party and any guarantor for all direct monetary damages, costs, and expenses, including reasonable attorneys' fees.

The City specifically does not, by any provision of this Franchise, waive any right, immunity, limitation, or protection otherwise available to the City, its officers, officials, City Council, Boards, commissions, agents, or employees under federal, State, or local law.

6.3 Right to Cure Default.

6.3.1 Notice. If a Party believes that the other Party is in Default, such Party shall give written notice to the Noticed Party stating with reasonable specificity the nature of the alleged default. The Noticed Party will then have thirty (30) days, or such greater time as specified in the notice or such lesser time as specified in the event that there is an imminent threat of harm to the public health, safety, or welfare resulting from the Default, from the receipt of such notice to:

6.3.1.1 Respond to the other Party, contesting that Party's assertion that a Default has occurred; or

6.3.1.2 Cure the Default; or

6.3.1.3 Notify the other Party that the Noticed Party cannot cure the Default within the time provided in the notice, because of the nature of the Default. In the event the Default cannot be cured within the time provided in the notice, the Noticed Party shall promptly take all reasonable steps to begin to cure the Default and notify the other Party in writing and in detail as to the exact steps that will be taken and the projected completion date. In such case, the other Party may set a meeting to determine whether additional time beyond the time provided in the notice is indeed needed, and whether the Noticed Party's proposed completion schedule and steps are reasonable.

6.3.2 Time to Cure. When specifying the time period for cure, the Party giving notice shall take into account: the nature and scope of the alleged Default; the nature

and scope of the work required to cure the Default; whether the Default has created or will allow to continue an unsafe condition; the extent to which delay in implementing a cure will result in adverse financial consequences or other harm to the Party giving notice; and whether delay in implementing a cure will result in a violation of Law or Default of contract.

6.3.3 Failure to Cure. If the Noticed Party fails to promptly commence and diligently pursue cure of a Default to completion to the reasonable satisfaction of the Party giving notice and in accordance with the agreed upon time line or the time provided for in the Notice of Default, then the parties may pursue any remedies available to them.

6.4 Termination/Revocation. In addition to the remedies available to the City as provided at Law, in equity, or elsewhere in this Franchise, upon a Default without timely and satisfactory cure, the City may revoke this Franchise and rescind all rights and privileges associated with this Franchise in accordance with the following:

6.4.1 Notice. Prior to termination of the Franchise, the City shall give written notice to the Franchisee of its intent to revoke the Franchise. The notice shall set forth the exact nature of the Default. If Franchisee objects to such termination, Franchisee shall object in writing within thirty (30) days, stating its reasons for objection and providing any explanation.

6.4.2 Hearing. The City may then seek a termination/revocation of the Franchise in accordance with this Subsection.

6.4.2.1 The City Council, or its designee, shall conduct a public hearing to determine if termination/revocation of the Franchise is warranted.

6.4.2.2 At least fourteen (14) days prior to the public hearing, the City shall issue a public hearing notice that shall establish the issue(s) to be addressed in the public hearing; provide the time, date, and location of the hearing; provide that the hearing examiner shall hear any Persons interested therein; and provide that the Franchisee shall be afforded fair opportunity for full participation, including the right to introduce evidence, to require the production of evidence, to be represented by counsel and to question witnesses. The public hearing notice shall be provided to Franchisee in accordance with Section 8.13 hereof and public notice of the hearing shall be provided in the same manner as notice is provided for regular meetings of the City Council.

6.4.2.3 Within sixty (60) days after the close of the hearing, the City Council shall issue a written decision regarding the termination/revocation of the Franchise. If the City Council has designated another body or hearing examiner to conduct the public hearing, the hearing body or examiner shall make a recommendation to the City Council within thirty (30) days following the close of the public hearing, and the City Council shall make a decision upon the recommendation of the hearing body or examiner after a closed record hearing and within sixty (60) days following receipt of the recommendation of the hearing body or examiner. The decision of the City Council shall be final. The Parties

recognize that a decision to terminate/revoke a Franchise is not a land use decision that is subject to appeal pursuant to the Land Use Petition Act (Chapter 36.70C RCW). Failure to render a decision within the required time period is not a basis for invalidation of the decision that is made. Any appeal to which the Franchisee may be entitled (e.g., constitutional or statutory writ of review) shall be filed within 30 calendar days of issuance of the final decision of the City Council.

6.4.3 Decision to Terminate. The City Council may consider one or more of the following when determining whether or not to terminate/revoke the Franchise based upon a material Default:

6.4.3.1 The history of repeated non-compliance by Franchisee with material terms and conditions of this Franchise;

6.4.3.2 Whether other remedies will achieve compliance with this Franchise;

6.4.3.3 Whether the Franchisee has acted in good faith;

6.4.3.4 Whether the acts or omissions that gave rise to the Default were willful or indifferent to the requirements of the Franchise;

6.4.3.5 Whether the type of services provided by the Franchisee will be available to the general public through other providers;

6.4.3.6 Whether services provided by the Franchisee are essential public services or regulated utilities;

6.4.3.7 The impact or potential impact of the Default upon the public health, safety, and welfare;

6.4.3.8 The economic risk the City is exposed to as a result of the Default;

6.4.3.9 Whether consent, permission, adjudication, or an order or other authorization of a governmental agency or body is required as a condition precedent to the City ordering the Franchisee to abandon or remove Facilities from the Public Rights-of-Way or to cease operations (temporarily or otherwise) of the Facilities.

6.4.3.10 Such other facts and circumstances that are relevant to the controversy that gave rise to the Default and/or to whether or not the continued presence and operation of the Facilities with the Franchise Area will be harmful to the public health, safety, or welfare.

6.5 Receivership. At the option of the City, subject to applicable law and lawful orders of courts of competent jurisdiction, this Franchise may be revoked after the

appointment of a receiver or trustee to take over and conduct the business of Franchisee whether in a receivership, reorganization, bankruptcy, or other action or proceeding, unless:

6.5.1 The receivership or trusteeship is timely vacated; or

6.5.2 The receiver or trustee has timely and fully complied with all the terms and provisions of this Franchise, and has remedied all defaults under the Franchise. Additionally, the receiver or trustee shall have executed an agreement duly approved by the court having jurisdiction, by which the receiver or trustee assumes and agrees to be bound by each and every term, provision, and limitation of this Franchise.

ARTICLE 7. CONDITIONS UPON USE OF PUBLIC RIGHTS-OF-WAY.

7.1 Regulatory Permit. If Franchisee has submitted an application for a Regulatory Permit to perform work in the Public Rights-of-Way, the City shall, to the extent practicable, consider such application contemporaneously with the design review requirements hereunder.

7.2 Submission/Approval of Design Documents.

7.2.1 Submission. At the time of application for a Regulatory Permit, or in the event that Franchisee seeks to alter or change the location of Facilities within the Franchise Area, Franchisee shall submit its Design Documents to the City for review and approval in accordance with the City's plan review process.

7.2.2 Use of Public Rights-of-Way. Within parameters reasonably related to the City's role in protecting the public health, safety, and welfare, and except as may be otherwise preempted by Law, the City may require that Facilities be installed at a particular time, at a specific place, or in a particular manner as a condition of access to the proposed Franchise Area and may deny access if Franchisee is not willing to comply with such requirements. The City may require removal of any Facility that is not installed in compliance with the Standards (defined in Section 7.3 below) or that is installed without prior City approval of the time, place, or manner of installation.

7.2.3 Approval of Plans. Work may not commence without prior approval by the City of the Design Documents submitted by the Franchisee, which approval will not be unreasonably withheld, conditioned, or delayed. The City may review and approve the Franchisee's Design Documents with respect to:

7.2.3.1 Location/Alignment/Depth;

7.2.3.2 The manner in which the Facility is to be installed;

7.2.3.3 Measures to be taken to preserve safe and free flow of traffic;

7.2.3.4 Structural integrity, functionality, appearance, and compatibility with and impact upon roadways, bridges, sidewalks, planting strips, signals, traffic control signs, intersections, or other facilities and structures in the Public Rights-of-Way;

7.2.3.5 Ease of future road maintenance and appearance of the roadway;

7.2.3.6 Compliance with applicable Standards (as defined below) and codes; and

7.2.3.7 Compliance and compatibility with the City's comprehensive plan, six-year transportation plan, capital improvements plan, and regional transportation improvement plans.

7.3 Compliance with Standards/Codes. Except as may be preempted by federal or state Laws, all Facilities shall conform to and all Work shall be performed in compliance with the following "Standards" as now or may be hereafter revised, updated, amended, or re-adopted:

7.3.1 Standards for Public Works Engineering and Construction. The most current edition of the City Standards for Public Works Engineering and Construction as adopted from time to time by the City. This document includes the City Design Standards Manual, Design Standards Detail, and appendixes, and the most recently City-adopted edition of the Standard Specifications for Road, Bridge and Municipal Construction as prepared by the Washington State Department of Transportation ("WSDOT") and the Washington State Chapter of American Public Works Association ("APWA");

7.3.2 MUTCD. The Washington State Department of Transportation Manual of Uniform Traffic Control Devices ("MUTCD");

7.3.3 Special Conditions. Requirements and standards set forth as additional conditions in a Regulatory Permit.

7.3.4 City Regulations. City ordinances, codes, and regulations establishing standards for placement of Facilities in Public Rights-of-Way, including by way of example and not limitation, the specific location of Facilities in the Public Rights-of-Way.

7.3.5 Other Regulatory Requirements. Applicable requirements of federal or state governmental authorities that have regulatory authority over the placement, construction, or design of Franchisee Facilities;

7.3.6 Industry Standards. All Facilities shall be durable and Constructed in accordance with good engineering practices and standards promulgated by the

government and industry for placement, Construction, design, type of materials, and operation of Franchisee Facilities;

7.3.7 Safety Codes and Regulations. Franchisee Facilities and Work shall comply with all applicable federal, State, and City safety requirements, rules, regulations, Laws, and practices. By way of illustration and not limitation, Franchisee shall comply with the National Electrical Safety Code and the Occupational Safety and Health Administration (OSHA) Standards; and

7.3.8 Building Codes. Franchisee Facilities and Work shall comply with all applicable City Building Codes.

7.4 Conditions Precedent to Work. Except as may be otherwise required by applicable City code, rule, regulation, or Standard, Franchisee shall comply with the following as a condition precedent to Work:

7.4.1 Regulatory Permits Required. Except in the event of an Emergency, prior to performing any Work in the Public Right-of-Way requiring a Regulatory Permit, Franchisee shall apply for and obtain in advance, such appropriate Regulatory Permits from the City as are required by ordinance or rule. Franchisee shall pay all generally applicable and lawful fees for the requisite City Regulatory Permits.

7.4.2 Compliance with Franchise. Franchisee shall be in material compliance with the Franchise.

7.5 Work in the Public Rights-of-Way.

7.5.1 Least Interference. Work in the Public Rights-of-Way shall be done in a manner that does not unnecessarily hinder or obstruct the free use of the Public Rights-of-Way or other public property and which causes the least interference with the rights and reasonable convenience of property owners, businesses, and residents along the Public Rights-of-Way. Franchisee Facilities shall be designed, located, aligned, and Constructed so as not to disturb or impair the use or operation of any street improvements, utilities, and related facilities of City or City's existing lessees, licensees, permittees, franchisees, easement beneficiaries, or lien holders, without prior written consent of City or the Parties whose improvements are interfered with and whose consent is required pursuant to agreements with the City existing prior to the Effective Date.

7.5.2 Work Subject to Inspection. The City may observe or inspect the Construction Work, or any portion thereof, at any time to ensure compliance with applicable Regulatory Permits, this Franchise, applicable Law, the applicable approved Design Documents, and the Standards, and to ensure the Work is not being performed in an unsafe or dangerous manner.

7.5.4 Notice to the Public. Except in the case of an Emergency, City retains the right to require the Franchisee to notify the public prior to commencing any

significant planned Construction that Franchisee reasonably anticipates will materially disturb or disrupt public property or have the potential to present a danger or affect the safety of the public generally.

7.5.5 Work of Contractors and Subcontractors. Franchisee's contractors and subcontractors performing Work in the Franchise Area shall be licensed and bonded in accordance with the City's and State's applicable regulations and requirements. Any contractors or subcontractors performing Work within the Public Rights-of-Way on behalf of the Franchisee shall be deemed servants and agents of the Franchisee for the purposes of this Franchise and are subject to the same restrictions, limitations, and conditions as if the Work were performed by Franchisee. Franchisee is responsible for all Work performed by its contractors and subcontractors and others performing Work on its behalf as if the Work were performed by it, and shall ensure that all such Work is performed in compliance with this Franchise and other applicable laws, and is jointly and severally liable for all damages and correcting all damage caused by them. It is Franchisee's responsibility to ensure that contractors, subcontractors, or other Persons performing Work on Franchisee's behalf are familiar with the requirements of this Franchise and other applicable Laws governing the Work performed by them.

7.5.6 Emergency Permits. In the event that Emergency repairs are necessary, Franchisee shall perform such Work, provide such notices, and obtain Regulatory Permits in conformance with applicable Standards.

7.5.7 Stop Work. On notice from the City that any Work does not comply with the Franchise, the approved Design Documents for the Work, the Standards, or other applicable Law, or is being performed in an unsafe or dangerous manner as reasonably determined by the City, the City may immediately order a stop to the non-compliant Work. The stop-work order shall be in writing, be given to the Person doing the Work, be posted on the Work site, indicate the nature of the alleged violation or unsafe condition, and establish conditions under which Work may be resumed. If so ordered, Franchisee shall cease and shall cause its contractors and subcontractors to cease such activity until the City is reasonably satisfied that Franchisee is in compliance. If an unsafe condition is found to exist, the City, in addition to taking any other action permitted under applicable Law, may order Franchisee to make the necessary repairs and alterations specified therein forthwith to correct the unsafe condition by a time the City establishes in its reasonable discretion. The City has the right to inspect, repair, and correct the unsafe condition if Franchisee fails to do so, and to reasonably charge Franchisee for the costs incurred to perform such inspection, repair, or correction. Payment by Franchisee will be made in accordance with Section 5.6.9. The authority and remedy set forth herein in this section is in addition to, and not a substitute for, any authority the City may otherwise have to take enforcement action for violation of City Codes or Standards.

7.5.8 Discovery of Hazardous Substances/Indemnity. In the event that the Work of the Franchisee in, on, and upon the Franchise Area results in the discovery of the presence of Hazardous Substances ("**Discovered Matters**") in, on, or upon the areas excavated or otherwise opened or exposed by Franchisee within the Franchise Area (the

"**Excavated Areas**"), the Franchisee shall immediately notify the City and take whatever other reporting action is required by applicable Environmental Law as it relates to the Discovered Matters in the Excavated Areas.

In the event the Franchisee's Work in, on, or upon the Franchise Area within the Excavated Areas results in a release (as determined under applicable Environmental Laws) of Hazardous Substances which were, before such activities, confined to areas within the Excavated Areas, but which after such activities by Franchisee are released beyond the Excavated Areas, and if the release is caused in whole or in part by the Franchisee, then the Franchisee shall indemnify, defend, and hold the City harmless from the costs of all necessary Remedial Actions required under the applicable Environmental Laws, to the extent of Franchisee's share of the liability for the release as determined by a final non-appealable decision by a court of competent jurisdiction, or as provided in a final non-appealable administrative order issued by the Environmental Authority, or by a consent decree entered by Franchisee and the Environmental Authority.

7.6 Alterations. Except as may be shown in the Design Documents or Regulatory Permits approved by the City or the record drawings, or as may be necessary to respond to an Emergency, neither Franchisee nor Franchisee's contractors or subcontractors may make any material alterations to the Franchise Area, or permanently affix anything to the Franchise Area, without the City's prior written consent. Material alteration includes by way of example and not limitation a change in the dimension or height of the above ground Facilities. If Franchisee desires to change the location of any Facilities or otherwise materially deviate from the approved design of any of the Facilities, Franchisee shall submit such change to the City in writing for its approval pursuant to Section 7.2 of this Franchise. Franchisee may not commence any such change until after Franchisee has received the City's approval in writing.

7.7 General Conditions.

7.7.1 Right-of-Way Meetings. If provided reasonable advance notice, Franchisee will attend and participate in meetings of the City regarding Right-of-Way issues that may impact the Telecommunications System.

7.7.2 Compliance Inspection. Franchisee's Facilities are subject to the City's right of periodic inspection upon at least seventy-two (72) hours' notice, or, in case of an emergency, upon demand without prior notice, to determine compliance with the provisions of this Franchise or other applicable Law over which the City has jurisdiction. Franchisee shall respond to reasonable requests for information regarding its Telecommunications System as the City may from time to time issue in writing to determine compliance with this Franchise, including requests for information regarding the Franchisee's plans for Construction and the purposes for which the Facility is being Constructed.

7.7.3 One Call. If Franchisee places Facilities underground, Franchisee shall, at its own expense, continuously be a member of the State of Washington one-number locator service under Chapter 19.122 RCW or an approved equivalent, and shall comply with all such applicable rules and regulations. The Franchisee shall locate and field mark its Facilities for the City at no charge.

7.7.4 Graffiti Removal. Within 5 business days after notice from the City, Franchisee shall remove any graffiti on any part of its Telecommunications System, including, by way of example and not limitation, equipment cabinets. If the Franchisee fails to do so within 5 business days, or in the City's discretion and subject to advance communication with the Franchisee, the City may remove the graffiti and bill the Franchisee for the reasonable cost thereof.

7.7.5 Dangerous Conditions, Authority for City to Abate. Whenever Construction of Facilities has caused or contributed to a condition that in the reasonable opinion of the City Engineer substantially impairs the lateral support of the adjoining Public Right-of-Way, street, or public place, or endangers the public, any utilities, or City-owned property, the City may reasonably require the Franchisee to take action to protect the Public Right-of-Way, the public, adjacent public places, City-owned property, streets, and utilities. Such action may include compliance within a prescribed time. In the event that the Franchisee fails or refuses to promptly take the actions directed by the City, or fails to fully comply with such directions, or if Emergency conditions exist which require immediate action, the City may, to the extent it may lawfully do so, take such actions as are necessary to protect the Public Right-of-Way, the public, adjacent public places, City-owned property, streets, and utilities, to maintain the lateral support thereof, or actions regarded as necessary safety precautions; and the Franchisee shall be liable to the City for the reasonable costs thereof to the extent Franchisee is the proximate cause of such condition.

7.7.6 No Duty. Notwithstanding the right of the City to inspect the Work, issue a stop-work order, and order or make repairs or alterations, the City has no duty or obligation to observe or inspect, or to halt Work on, the applicable Facilities, it being solely Franchisee's responsibility to ensure that the Facilities are Constructed and operated in strict accordance with this Franchise, the approved Design Documents, the Standards, and applicable Law. Neither the exercise nor the failure by the City to exercise any right set forth in this Article 7 alters the liability allocation set forth in this Franchise.

7.7.7 Roadside Hazard. All of Franchisee's Facilities shall be kept by Franchisee at all times in a safe and hazard-free condition. Franchisee shall ensure that Facilities within the Public Rights-of-Way do not become or constitute an unacceptable roadside obstacle and do not interfere with or create a hazard to maintenance of and along the Public Rights-of-Way. Franchisee shall take prompt action to correct any such obstacles or hazards. In the event that the City determines that a Facility within the Public Rights-of-Way has become or constitutes an unacceptable roadside obstacle or may interfere with or create a hazard to maintenance of and along the Public Rights-of-

Way, following written notice explaining with reasonable specificity the nature of any such matter and a reasonable opportunity to cure of not less than thirty (30) days, the Franchisee shall take corrective action. Nothing in this Franchise relieves the Franchisee from keeping its Facilities at all times in safe and hazard-free condition.

Franchisee, at all times, shall employ the standard of care attendant to the risks involved and shall install and maintain in use commonly accepted methods and devices for preventing failures and accidents which are likely to cause damage, injury, or nuisance to the public or to Franchisee's agents or employees. Franchisee, at its own expense, shall repair, renew, change, and improve its Facilities from time to time as may be necessary to accomplish this purpose. Franchisee shall use suitable barricades, flags, flaggers, lights, flares, and other measures as required for the safety of all members of the general public and to prevent injury or damage to any person, vehicle, or property by reason of such Work in or affecting such Public Rights-of-Way or property. All excavations made by Franchisee in the Public Rights-of-Way shall be properly safeguarded for the prevention of accidents.

7.7.8 Verification of Alignment/Depth. Upon at least thirty (30) days' written notice by the City, in order to facilitate the location, alignment, and design of Public Improvements (defined below), the Franchisee agrees to locate and, if reasonably determined necessary by the City, to excavate and expose portions of its Facilities for inspection so that the location of same may be taken into account in the Public Improvement design, but only if Franchisee's record drawings and maps of its Facilities submitted pursuant to Section 7.11 of this Franchise are reasonably determined by the City to be inadequate for purposes of this paragraph.

7.8 Facility Relocation at Request of the City.

7.8.1 Public Improvement. The City may require Franchisee to alter, adjust, relocate, or protect in place its Facilities within the Public Rights-of-Way when reasonably necessary for construction, alteration, repair, or improvement of any portion of the Public Rights-of-Way for purposes of public welfare, health, or safety ("Public Improvements"). Such Public Improvements include, by way of example but not limitation: Public Rights-of-Way construction; Public Rights-of-Way repair (including resurfacing or widening); change of Public Rights-of-Way grade; construction, installation or repair of sewers, drains, water pipes, power lines, signal lines, communication lines, or any other type of government-owned communications, utility, transportation system, public work, public facility, or improvement of any government-owned utility; Public Rights-of-Way vacation; and the Construction of any public improvement or structure by any governmental agency acting in a governmental capacity for the public benefit.

7.8.2 Alternatives. If the City requires Franchisee to relocate its Facilities, the City shall make a reasonable effort to provide Franchisee with an alternate location within the Public Right-of-Way. The Franchisee may, after receipt of written notice requesting a relocation of its Facilities, propose design alternatives that would

mitigate or lessen the impact upon Franchisee's Facilities. The City shall provide a full and fair evaluation of such proposed design alternatives to determine whether, in the reasonable judgment of the City, such alternatives would impair, interfere with, or materially alter the scope, purpose, or functioning of the Public Improvement or increase the anticipated public costs of the Public Improvement. If so requested by the City, Franchisee will submit additional information to assist the City in making such evaluation. In the event that the City reasonably determines that it does not have available resources within the existing Public Improvement budget to fully and fairly evaluate Franchisee's proposal, the City is not obligated to further consider such proposal unless and until the Franchisee funds the additional costs to the City to complete its evaluation.

7.8.3 Notice. The City shall notify Franchisee in writing as soon as practicable of the need for relocation and shall specify the date by which relocation shall be completed. Except in case of Emergency, such notice shall be no less than one hundred and eighty (180) days. In calculating the date that relocation must be completed, City shall consult with Franchisee and consider the extent of Facilities to be relocated, the service requirements, and the construction sequence for the relocation, within the overall project construction sequence and constraints, to safely complete the relocation. Franchisee shall complete the relocation by the date specified unless the City, or a reviewing court, establishes a later date for completion, after a showing by the Franchisee that the relocation cannot be completed by the date specified using best efforts and meeting safety and service requirements.

7.8.4 Coordination of Work. Franchisee acknowledges and understands that any delay by Franchisee in performing the Work to alter, adjust, relocate, or protect in place its Facilities within the Public Rights-of-Way may delay, hinder, or interfere with the work performed by the City and its contractors and subcontractors in furtherance of construction, alteration, repair, or improvement of the Public Improvement, and result in damage to the City and/or its contractors, including but not limited to, delay and disruption claims. Franchisee shall cooperate with the City and its contractors and subcontractors to coordinate such Franchisee Work to accommodate the Public Improvement project and project schedules to avoid delay, hindrance, or disruption of such project.

7.8.5 Assignment of Rights. In addition to any other rights of assignment the City may have, the City may from time to time assign or transfer to its contractors or subcontractors its rights under Section 7.10 of this Franchise.

7.8.6 Reimbursement for Costs. Notwithstanding the cost allocation provisions set forth in this Franchise, Franchisee does not waive its right(s) to and shall be entitled to seek reimbursement of its relocation costs as may be otherwise specifically set forth and authorized by Law, including in statute. Further, if the City reimburses or pays the relocation costs of a similarly situated franchisee for a given Public Improvement project, the City shall reimburse or pay Franchisee's relocation costs on the same basis

7.9 Movement of Facilities for Others.

7.9.1 Private Benefit. If any alteration, adjustment, temporary relocation, or protection in place of the Telecommunications System is required solely to accommodate the Construction of facilities or equipment that are not part of a Public Improvement project, Franchisee shall, after at least one hundred eighty (180) days' advance written notice, take action to effect the necessary changes requested by the responsible Person, but only if (a) the Person requesting the same pays for the Franchisee's time, design, engineering, and material costs associated with the requested work; (b) the alteration, adjustment, relocation, or protection in place is reasonably necessary to accommodate such work; (c) Franchisee's services are not interrupted; and (d) such alteration, adjustment, or relocation is not requested for the purpose of obtaining a competitive advantage over the Franchisee.

7.9.2 Temporary Changes for Other Franchisees. At the request of any Person holding a valid permit and upon reasonable advance notice, Franchisee shall temporarily raise, lower, or remove its wires as necessary to permit the moving of a building, vehicle, equipment, or other item. The expense of such temporary changes must be paid by the permit holder. Franchisee shall be given not less than thirty (30) days' advance written notice to arrange for such temporary wire changes.

7.10 Movement of Facilities During Emergencies.

7.10.1 Immediate Threat. In the event of an unforeseen event, condition, or circumstance that creates an immediate threat to the public safety, health, or welfare, the City shall have the right to require Franchisee to shut down, relocate, remove, replace, modify, or temporarily disconnect Franchisee's Facilities located in the Public Rights-of-Way at the expense of the Franchisee without regard to the cause or causes of the immediate threat.

7.10.2 Emergency. In the event of an Emergency, or where a Facility creates or is contributing to an imminent danger to health, safety, or property, the City retains the right and privilege to protect, support, temporarily disconnect, remove, or relocate any or all parts of the Telecommunications System located within the Public Rights-of-Way, as the City may determine to be reasonably necessary, appropriate, or useful in response to any public health or safety Emergency and charge the Franchisee for costs incurred.

7.10.3 Notice. During Emergencies the City shall endeavor to, as soon as practicable, provide notice to Franchisee of such Emergency at a designated Emergency response contact number, to allow Franchisee the opportunity to respond and rectify the problem without disrupting Telecommunications Service. If after providing notice, there is no immediate response, the City may protect, support, temporarily disconnect, remove, or relocate any or all parts of the Telecommunications System located within the Public Rights-of-Way in accordance with this Section 7.10.

7.10.4 Limitation on Liability. The City shall not be liable for any direct, indirect, or any other such damages suffered by any person or entity of any type as a direct or indirect result of the City's actions under this Section.

7.11 Record of Installations.

7.11.1 Map/Record Drawing of Telecommunications System. Upon request by the City, Franchisee shall search for and provide the City with the most accurate and available maps and record drawings in a form and content reasonably prescribed by the City reflecting the horizontal and vertical location and configuration of its Telecommunications System within the Public Rights-of-Way and upon City property in a format reasonably acceptable to the City. Franchisee shall provide the City with updated record drawings and maps within a reasonable period of time following receipt of written request.

7.11.2 Maps/Record Drawings of Improvements. After Construction involving the locating or relocating of Facilities, the Franchisee shall provide the City with accurate copies of all record drawings and maps showing the horizontal and vertical location and configuration of all located or relocated Facilities within the Public Rights-of-Way. These record-drawings and maps shall be provided at no cost to the City, and shall include hard copies and digital copies in a format reasonably specified by the City.

7.12 Restoration of Public Rights-of-Way, Public and Private Property.

7.12.1 Restoration after Construction. Franchisee shall, after completion of Construction of any part of its Telecommunications System, leave the Public Rights-of-Way and other property disturbed thereby, in as good or better condition in all respects as it was in before the commencement of such Construction. Franchisee agrees to promptly complete restoration work to the reasonable satisfaction of the City and in conformance with City Standards, including, by way of example and not limitation, backfilling and restoration requirements as set forth in City Standards.

7.12.2 Notice. If Franchisee's Work causes unplanned, unapproved, or unanticipated disturbance of or alteration or damage to Public Rights-of-Way or other public or private property, the Franchisee shall promptly notify the property owner within twenty-four (24) hours.

7.12.3 Duty to Restore. If Franchisee's Work causes unplanned, unapproved, or unanticipated disturbance of or alteration or damage to Public Rights-of-Way or other public property, it shall promptly remove any obstructions therefrom and restore such Public Rights-of-Way and property to the reasonable satisfaction of the City and in accordance with City Standards.

7.12.4 Temporary Restoration. If weather or other conditions do not allow the complete restoration required by this Section, Franchisee shall temporarily restore the affected Public Right-of-Way or property. Franchisee shall promptly undertake

and complete the required permanent restoration when the weather or other conditions no longer prevent such permanent restoration.

7.12.5 Survey Monuments. All survey monuments which are disturbed or displaced by any Work shall be referenced and restored, as per WAC 332-120, as the same now exists or may hereafter be amended, and all pertinent federal, state, and local standards and specifications.

7.12.6 Approval. The City Engineer, or his designee, shall be responsible for observation and final approval of the condition of the Public Rights-of-Way and City property following any restoration activities therein. Franchisee is responsible for all testing and monitoring of restoration activities.

7.12.7 Warranty. Franchisee shall warrant any restoration work performed by Franchisee in the Public Rights-of-Way or on other public property for two (2) years, unless a longer period is required by applicable City Standards. If restoration of the Public Rights-of-Way or public property is not satisfactorily and timely performed by the Franchisee, the City may, after prior notice to the Franchisee, or without notice where the disturbance or damage may create an imminent risk to public health or safety, cause the repairs to be made and recover the reasonable cost of those repairs from the Franchisee. Franchisee shall pay the City for such costs in accordance with Section 5.6.9.

7.12.8 Restoration of Private Property. When Franchisee does any Work in the Public Rights-of-Way that affects, disturbs, alters, or damages any adjacent private property, it shall, at its own expense, be responsible for restoring such private property to the reasonable satisfaction of the private property owner.

7.13 Approvals. Nothing in this Franchise shall be deemed to impose any duty or obligation upon the City to determine the adequacy or sufficiency of Franchisee's Design Documents or to ascertain whether Franchisee's proposed or actual Construction is adequate or sufficient or in conformance with the Design Documents reviewed and approved by the City. No approval given, inspection made, or review or supervision performed by the City pursuant to or under authority of this Franchise shall constitute or be construed as a representation or warranty express or implied by the City that such item reviewed, approved, inspected, or supervised, complies with applicable Laws or this Franchise or meets any particular Standard, code, or requirement, or is in conformance with the approved Design Documents, and no liability shall attach to the City with respect thereto. City approvals and inspections as provided herein, are for the sole purpose of protecting the City's rights as the owner and/or manager of the Public Rights-of-Way and shall not constitute any representation or warranty, express or implied, as to the adequacy of the design or Construction of the Facilities or Telecommunications System, suitability of the Franchise Area for Construction, or any obligation on the part of the City to insure that Work or materials are in compliance with any requirements imposed by a governmental entity. The City is under no obligation or duty to supervise the design, Construction, or operation of the Telecommunications System.

7.14 Abandonment of Facilities. Except as may be otherwise provided by Law, Franchisee may abandon in place any Facilities in the Public Rights-of-Way upon written notice to the City, which notice shall include a description of the Facilities it intends to abandon, the specific location in the Public Rights-of-Way of such Facilities, and the condition of such Facilities. However, if the City determines within 180 days of the receipt of notice of abandonment from the Franchisee, that the safety, appearance, functioning, or use of the Public Rights-of-Way and other facilities in the Public Rights-of-Way, including without limitation, utilities and related facilities, will be adversely affected, the operator must remove its abandoned Facilities by a date specified by the City and restore the Public Rights-of-Way in accordance with City Standards. Franchisee shall be and remain responsible in perpetuity for any Facilities abandoned in the Public Rights-of-Way.

ARTICLE 8. MISCELLANEOUS.

8.1 Headings. Titles to articles and sections of this Franchise are not a part of this Franchise and have no effect upon the construction or interpretation of any part hereof.

8.2. Entire Agreement. This Franchise contains all covenants and agreements between the City and the Franchisee relating in any manner to the Franchise, use, and occupancy of the Public Rights-of-Way, and other matters set forth in this Franchise. No prior agreements or understanding pertaining to the same, written or oral, are valid or of any force or effect, and the covenants and agreement of this Franchise may not be altered, modified, or added to except in writing signed by the City and Franchisee and approved by the City in the same manner as the original Franchise was approved.

8.3 Incorporation of Exhibits. All exhibits annexed hereto at the time of execution of this Franchise or in the future as contemplated herein, are hereby incorporated by reference as though fully set forth herein.

8.4 Calculation of Time. Except where a period of time refers to "business days," all periods of time referred to herein include Saturdays, Sundays, and legal holidays in the State of Washington, except that if the last day of any period falls on any Saturday, Sunday, or legal holiday in the State of Washington, the period extends to include the next day which is not a Saturday, Sunday, or legal holiday in the State of Washington. The Effective Date, however, shall be determined as provided at Section 4.3 of this Franchise.

8.5 Time Limits Strictly Construed. Whenever this Franchise sets forth a time for any act to be performed by Franchisee, that time is intended to be of the essence, and any failure of Franchisee to perform within the allotted time may be considered a Default of this Franchise.

8.6 No Joint Venture. Nothing in this Franchise creates or is intended to create any partnership, joint venture, or principal-agent relationship or other arrangement

between Franchisee and the City. Neither Party is authorized to, nor may either Party act toward third Persons or the public in any manner that would indicate any such relationship with the other. The Parties intend that the rights, obligations, and covenants in this Franchise and its collateral instruments are enforceable exclusively by the City and Franchisee, and their successors and assigns. No term or provision of this Franchise has been included for the benefit of any Person not a Party hereto, and no such Person has a right or cause of action hereunder, unless explicitly provided herein. Further, Franchisee is not granted any express or implied right or authority to assume or create any obligation or responsibility on behalf of or in the name of the City. Nothing in this Section 8.6 precludes an assignment as provided for at Sections 2.8 or 7.8.5 of this Franchise.

8.7 Approval Authority. Except as may be otherwise provided by Law or in this Franchise, any approval or authorization required to be given by the City shall be given by the Public Works Director or his successor or designee.

8.8 Binding Effect upon Successors and Assigns. All of the provisions, conditions, and requirements contained in this Franchise are binding upon the heirs, successors, executors, administrators, receivers, trustees, legal representatives, transferees, and assigns of the Franchisee; and all privileges, as well as all obligations and liabilities of the Franchisee inure to its heirs, successors, and assigns equally as if they were specifically mentioned wherever the Franchisee is named herein.

8.9 Waiver. No failure by either Party to insist upon the performance of any of the terms of this Franchise or to exercise any right or remedy consequent upon a Default thereof, constitutes a waiver of any such Default or of any of the terms of this Franchise. None of the terms of this Franchise to be kept, observed, or performed by either Party, and no Default thereof, may be waived, altered, or modified except by a written instrument executed by the injured Party. No waiver of any Default affects or alters this Franchise, and each of the terms of this Franchise will remain in full force and effect with respect to any other then existing or subsequent Default thereof. No waiver of any default of the defaulting Party hereunder may be implied from any omission by the injured Party to take any action on account of such default if such default persists or is repeated, and no express waiver will affect any default other than the default specified in the express waiver and then only for the time and to the extent therein stated. One or more waivers by the injured Party does not constitute a waiver of a subsequent Default of the same covenant, term, or condition.

8.10 Severability. If any word, article, section, subsection, paragraph, provision, condition, clause, or sentence set forth herein, or its application to any person or circumstance (collectively referred to as “Term”), is found by a court or agency of competent jurisdiction to be illegal, invalid, or unconstitutional for any reason, the remaining Terms of the Franchise shall remain in full force and effect unless to do so would be inequitable or would result in a material change in the rights and obligations of the Parties hereunder.

8.11 Signs. No signs or advertising are permitted in the Franchise Area except as may be required by Law or as may be required by the City for the protection of the public health, safety, and welfare, to the extent it has authority to do so.

8.12 Discriminatory Practices Prohibited. Throughout the term of this Franchise, Franchisee shall fully comply with all equal employment and nondiscrimination provisions of applicable Law.

8.13 Notice. Any notice required or permitted to be given hereunder shall be in writing, unless otherwise expressly permitted or required, and is effective either (i) upon hand delivery to the person then holding the office shown on the attention line of the address below, or, if such office is vacant or no longer exists, to a person holding a comparable office, or (ii) or when delivered by a nationally recognized overnight mail delivery service, to the Party and at the address specified below, or (ii) on the third business day following its deposit with the United States Postal Service, first class and certified or registered mail, return receipt requested, postage prepaid, properly sealed and addressed as follows:

**Franchisee's address:**
Zayo Group, LLC
Office of the General Counsel
1805 29th Street
Boulder, CO 80301

Attention: Wendy Cassity, General Counsel

**The City's Address:**
City of Sammamish
801 228th Avenue SE
Sammamish, WA 98075
Attention: Director of Administrative Services

**With a copy to:**
Kenyon Disend, PLLC
11 Front Street South
Issaquah, WA 98027
Attention: Michael R. Kenyon, City Attorney

The City and Franchisee may designate such other address from time to time by giving written notice to the other, but notice cannot be required to more than two addresses, except by mutual agreement.

8.14 Survival of Terms. Upon the expiration, termination, revocation, or forfeiture of the Franchise, the Franchisee will no longer have the right to occupy the Franchise Area for the purpose of providing services authorized herein. However, the Franchisee's obligations under this Franchise to the City survive the expiration, termination, revocation, or forfeiture of these rights according to its terms for so long as the Franchisee's Telecommunications System or any part thereof remain in whole or in

part in the Public Rights-of-Way, or until such time as the Franchisee transfers ownership of all Facilities in the Franchise Area to the City or a third-Party, or until such time as the Franchisee abandons said Facilities in place, all as provided herein. Said obligations include, by way of illustration and not limitation, Franchisee's obligations to indemnify, defend, and protect the City, to provide insurance, to relocate its Facilities, and to reimburse the City for its costs to perform Franchisee's Work.

8.15 Force Majeure. In the event Franchisee is prevented or delayed in the performance of any of its obligations herein due to unforeseen circumstances beyond its control, including, but not limited to, acts of God, acts of terrorism, war, riots, civil disturbances, natural disasters, floods, tornadoes, earthquakes, severe weather conditions, employee strikes, and unforeseen labor conditions not attributable to Franchisee's employees, Franchisee may not be held in Default of any provisions of this Franchise affected thereby.

If Franchisee believes that circumstances beyond its control or by reason of a force majeure occurrence have prevented or delayed its compliance with the provisions of this Franchise, Franchisee shall provide documentation as reasonably required by the City to substantiate the Franchisee's claim. Franchisee may thereafter have a reasonable time, under the circumstances, to perform the affected obligation under this Franchise or to procure a substitute for such obligation which is reasonably satisfactory to the City, but Franchisee shall nonetheless perform to the maximum extent it is able to perform and shall take reasonable steps within its power to correct such cause(s) in as expeditious a manner as possible and bring itself back into compliance with the Franchise without unduly endangering the health, safety, and integrity of the Franchisee's employees or property, or the health, safety, and integrity of the public, Public Rights-of-Way, public property, or private property.

8.16 Attorneys' Fees. If a suit, action, arbitration, or other proceeding of any nature whatsoever is instituted to enforce any express or implied provisions of this Franchise or determine its application to any person or circumstance, the prevailing Party shall be entitled to recover from the losing Party its reasonable attorneys', paralegals', accountants', and other experts' fees and all other fees, costs, and expenses actually incurred and reasonably necessary in connection therewith, as allowed by Washington law and as determined by the judge or arbitrator at trial or arbitration, as the case may be, or on any appeal or review, in addition to all other amounts provided by Law. This provision includes costs and attorneys' fees related to or with respect to proceedings in Federal Bankruptcy Courts, including those related to issues unique to bankruptcy law.

8.17 Venue/Choice of Law. This Franchise is governed by and shall be construed under the laws of the State of Washington, excluding its choice-of-law rules. Any action arising out of or relating in any way to this Franchise shall be initiated in the Superior Court of King County, Washington, and may not be removed to a federal court, except as to claims over which the Superior Court lacks jurisdiction. Removal to federal court, if permitted, shall be to the Federal Court of the Western District of Washington.

8.18 Publication. This ordinance, or a summary thereof, shall be published in the official newspaper of the City, the expense of which shall be borne by Franchisee, and shall take effect and be in full force in accordance with Section 4.3 herein.

**ADOPTED BY THE CITY COUNCIL AT A REGULAR MEETING THEREOF ON THE _____ DAY OF _____, 2017.**

CITY OF SAMMAMISH

_____
Donald J. Gerend, Mayor

ATTEST/AUTHENTICATED:

_____
Melonie Anderson, City Clerk

Approved as to form:

_____
Michael R Kenyon, City Attorney

Filed with the City Clerk: April 26, 2017
First Reading: May 2, 2017
Passed by the City Council:
Publication Date:
Effective Date:

**EXHIBIT "A"**

(*Acceptance of Franchise*)

Franchise issued pursuant to Ordinance No. _____.

I, _____, am the _____, and am the authorized representative to accept the above-referenced Franchise on behalf of _____. In my capacity as _____, and not individually, I certify that this Franchise and all terms and conditions thereof are accepted by _____, without qualification or reservation and that _____ unconditionally guarantee(s) performance of all such terms and conditions.

DATED this _____ day of _____, 20___.

_____
By_____
Its _____

Tax Payer ID# _____

STATE OF _____ | ss.
CITY OF _____

I certify that I know or have satisfactory evidence that _____ is the person who appeared before me, and said person acknowledged that said person signed this instrument, on oath stated that said person was authorized to execute the instrument and acknowledged it (as the _____ of _____, a _____ corporation), to be the free and voluntary act of such corporation/individual for the uses and purposes mentioned in the instrument.

Dated this _____day of _____, _____.

_____
(Signature of Notary)

_____
Print Name
Notary public in and for the state of
_____, residing at _____
My appointment expires _____

**EXHIBIT "B"**

(*Form of Transfer Agreement*)

THIS TRANSFER AGREEMENT ("Agreement") is made this ___ day of _____, 20___, by and between:

**1. PARTIES.**

1.1 City of Sammamish, a legal subdivision of the state of Washington ("City").

1.2 _____ ("Franchisee").

1.3 _____ ("Transferee").

**RECITALS**

WHEREAS the City has issued a single Franchise (the "Franchise") to Franchisee, which was authorized on the ____ day of _____, 20_____, pursuant to Ordinance No. _____, and

WHEREAS Franchisee has reached an agreement with Transferee on a *(describe transaction, example: conveyance of benefited property)* _____ _____ _____ with Transferee, to *(example: acquire from Franchisee its facilities and equipment located in the Public Rights-of-Way)* _____ _____, and

WHEREAS Franchisee and Transferee have requested that the City approve a transfer of the Franchise from Franchisee to Transferee, and

WHEREAS, as a result of the transfer of the Franchise, Transferee will assume all rights, duties, and obligations that Franchisee has under the Franchise, will be responsible for full compliance with the Franchise, and will meet or exceed all applicable and lawful federal, state, and local requirements, and

WHEREAS, relying on the representations made by the Transferee and Franchisee, the City, on the ___ day of _____, 20___, has, pursuant to Resolution No. _____ and the Franchise, approved the transfer upon the terms and conditions as stated herein;

NOW, THEREFORE, in consideration of the City's approval of the transfer, subject to the terms and conditions of this Agreement, THE PARTIES DO HEREBY AGREE as follows:

**2. TRANSFER.** Transfer of the Franchise shall be effective upon the last in time of the following conditions precedent:

2.1 Receipt by the City of the fully executed acceptance of Franchise attached hereto as Exhibit B-1 together with all required certificates of insurance, security fund and performance bond;

2.2 Payment to the City of the Transfer fees; and

2.3 The date of closing of the sale/conveyance of the property benefited by this Franchise and/or the Facilities located in the Franchise Area or upon a date as mutually agreed to by the City, Franchisee and Transferee as follows:_____ _____.

**3. ACCEPTANCE OF FRANCHISE OBLIGATIONS.**

3.1 The Franchisee and Transferee hereby accept, acknowledge, and agree that neither the proposed transaction between Franchisee and Transferee nor the City's approval of this Agreement diminishes or affects the existing and continuing commitments, duties, or obligations, present, continuing, and future, of the Franchisee and Transferee embodied in the Franchise.

3.2 Transferee and Franchisee agree that neither the transfer nor the City's approval of this Agreement and the resulting transfer in any respect relieves Franchisee, or any of its successors in interest, of any obligation or liability arising from acts or omissions occurring prior to the transfer of the Franchise, whether known or unknown, or the consequences thereof.

3.3 The transfer is not intended and may not be construed to authorize the Franchisee to take any position or exercise any right that could not have been exercised prior to the Transfer.

3.4 Notwithstanding anything to the contrary herein, Transferee is not responsible for any of Franchisee's financial liabilities and obligations (under the Franchise or pursuant to the City code, rules, and regulations) that accrued before the Transfer of the Franchise, and Franchisee is not responsible for any financial liabilities and obligations (under the Franchise or pursuant to the City code, rules, and regulations) that accrue on or after the Transfer of the Franchise.

3.5 The City waives none of its rights with respect to the Franchisee's or Transferee's compliance with the terms, conditions, requirements, and obligations set forth in the Franchise. The City's approval of this Agreement in no way constitutes a

representation by the City that Franchisee is in compliance with all of Franchisee's obligations under the Franchise.

3.6 Franchisee and Transferee acknowledge and agree that the City's approval and acceptance of this Agreement and the resulting transfer is made in reliance upon the representations, documents, and information provided by the Franchisee and Transferee in connection with the request for Transfer.

**4. MISCELLANEOUS PROVISIONS.**

4.1 Conditions Precedent. The Agreement becomes effective and binding upon the signatories once it has been signed by all signatories so long as, within 30 days of execution of the Agreement by all of the signatories, Transferee has provided to the City the following: (1) all fees required for this Transfer, (2) its acceptance of the Franchise in substantially the form of the document attached hereto as Exhibit B-1; (3) its insurance certificate in conformance with the requirements of the Franchise; (4) a performance bond or cash deposit in conformance with the requirements of the Franchise.

4.2 Entire Agreement. The Agreement constitutes the entire agreement of the Parties with respect to the matters addressed herein. No statements, promises, or inducements inconsistent with the Agreement made by any Party are valid or binding, unless in writing and executed by all Parties.

4.3 Binding Acceptance. The Agreement binds and benefits the Parties hereto and their respective heirs, beneficiaries, administrators, executors, receivers, trustees, successors, and assigns, and the promises and obligations herein survive the expiration date hereof. Any purported transfer of the Agreement is void without the express written consent of the signatories.

4.4 Severability. In the event that any provision of the Agreement is, to any extent, held to be invalid, preempted, or unenforceable, the remainder remains valid in all other respects and continues to be effective.

4.5 Defined Terms. Terms not defined in this Agreement have the same meaning as given in the Franchise.

4.6 Governing Law. The Agreement is governed in all respects by the laws of the state of Washington, excluding its choice-of-law rules.

4.7 Notice. Pursuant to Section 8.13 of the Franchise, Notices to Transferee shall be delivered to:

**Transferee's address:** **
**
**
**

**And to:** **
**
**
**

**IN WITNESS WHEREOF** the Parties hereto have executed this Agreement as of the day and year first written above.

**CITY:**

_____
By: City Manager

**FRANCHISEE:**

_____
By: _____
Title: _____

**TRANSFEREE:**

_____
By: _____
Title: _____

Tax Id. No. _____

**TRANSFER EXHIBIT B-1**

Acceptance of Franchise

Franchise issued pursuant to Ordinance No. _____ and accepted _____, 20____; Transfer authorized pursuant to Resolution No. _____, effective _____, 20___.

I, _____, am the _____, and am the authorized representative to accept the above-referenced Franchise on behalf of _____. In my capacity as _____, and not individually, I certify that this Franchise and all terms and conditions thereof are accepted by _____, without qualification or reservation and that _____ unconditionally guarantee(s) performance of all such terms and conditions.

DATED this _____ day of _____, 20___.

By_____
Its _____

Tax Payer ID# _____

STATE OF _____ | ss.
CITY OF _____

I certify that I know or have satisfactory evidence that _____ is the person who appeared before me, and said person acknowledged that said person signed this instrument, on oath stated that said person was authorized to execute the instrument and acknowledged it (as the _____ of _____, a _____ corporation), to be the free and voluntary act of such corporation/individual for the uses and purposes mentioned in the instrument.

Dated this _____day of _____, _____.

(Signature of Notary)

_____

_____

Print Name

Notary public in and for the state of _____, residing at _____

My appointment expires: _____

**EXHIBIT "C"**

(*Description of Franchise Area*)

The incorporated area (entire existing territorial limits) of the City of Sammamish and such additional areas as may be included in the corporate (territorial) limits of the City of Sammamish during the term of this Franchise.

**EXHIBIT "D"**

(Insurance Requirements)

1. General Requirement. Franchisee shall have adequate insurance at all times while Franchisee owns or operates Facilities in the Public Rights-of-Way, to protect the City against claims for death or injuries to Persons or damages to property or equipment which in any way relate to, arise from, or are connected with the Work, the Facilities, or the activities of Franchisee, its employees, agents, representatives, or contractors or subcontractors and their employees, within the Franchise Area.

2. Minimum Insurance Limits. The Franchisee shall maintain the following minimum insurance coverages and limits:

2.1 Commercial General Liability: insurance to cover liability, bodily injury, and property damage. The Commercial General Liability insurance shall be written on an occurrence basis, and shall provide coverage for any and all costs, including reasonable defense costs, and losses and damages resulting from personal injury, bodily injury and death, property damage, products liability and completed operations. Such insurance shall include broad form and blanket contractual coverage, including coverage for the Franchise as now or hereafter amended. Coverage must be written with at least the following limits of liability:

$2,000,000 per occurrence,
$4,000,000 general aggregate and
$1,000,000 products/completed operations aggregate.

2.2 Automobile Liability: shall include owned, hired, and non-owned vehicles on an occurrence basis with coverage of at least $2,000,000 per occurrence.

2.3 Workers Compensation Insurance: shall be maintained during the life of this Franchise to comply with statutory limits for all employees, and in the case any work is subcontracted, the Franchisee shall require its contractors and subcontractors similarly to provide workers' compensation insurance for all of their employees. The Franchisee shall also maintain, during the life of this policy, employer's liability insurance with limits of $1,000,000 each occurrence.

2.4 Excess or Umbrella Liability: $5,000,000 each occurrence and $5,000,000 policy limit.

3. Endorsements. Franchisee Commercial General Liability insurance policies shall contain, or be endorsed to contain, the following:

3.1 The Franchisee's insurance coverage is primary insurance with respect to the City. Any insurance, self-insurance, or insurance pool coverage maintained by the City shall be in excess of the Franchisee's insurance and shall not contribute to it.

3.2 Franchisee, through policy endorsement, waives its rights of subrogation against the City for all claims and suits.

3.3 That the coverage applies separately to each insured against whom a claim is made or suit is brought, except with respect to the limits of the insurer's liability.

3.4 The Franchisee's insurance shall name the City as an additional insured, to protect or insure as an additional insured, from and against Liabilities arising out of work performed in the Public Rights-of-Way under a grant of authority of the City.

3.5 The Franchisee's insurance shall include a requirement that the "railroad exclusion" be deleted or may include, in the alternative, ISO endorsement CG 24 17 or the equivalent.

3.6 The insurance coverages and limits provided herein shall not be canceled without thirty (30) days' prior written notice first being given to the City, with the exception that ten (10) days' notice is required for cancellation resulting from non-payment of premium. If the insurance is canceled or reduced in coverage, Franchisee shall provide a replacement policy.

4. Acceptability of Insurers. Each insurance policy obtained pursuant to this Franchise shall be issued by financially sound insurers who may lawfully do business in the State of Washington with a financial strength rating at all times during coverage of no less than an "A-" and in a financial size category of no less than "VII", in the latest edition of "Best's Rating Guide" published by A.M. Best Company. In the event that at any time during coverage, the insurer does not meet the foregoing standards, Franchisee shall give prompt notice to the City and shall seek coverage from an insurer that meets the foregoing standards. The City reserves the right to change the rating or the rating guide depending upon the changed risks or availability of other suitable and reliable rating guides.

5. Verification of Coverage. The Franchisee shall furnish the City with signed certificates of insurance and a copy of the amendatory endorsements, including, but not necessarily limited to, the additional insured endorsement, evidencing the Automobile Liability, Commercial General Liability, and Umbrella or Excess insurance of the Franchisee upon acceptance of this Franchise. The certificate for each insurance policy is to be signed by a Person authorized by that insurer to bind coverage on its behalf. The certificate for each insurance policy must be on standard forms or on such forms as are consistent with standard industry practices. The Franchisee hereby warrants that its insurance policies satisfy the requirements of this Franchise.

6. Deductible. Commercial General Liability Insurance policies and coverage required herein may include a deductible, but if Franchisee elects to include any deductible, Franchisee shall itself directly cover, in lieu of insurance, any and all City Liabilities that would otherwise in accordance with the provisions of this Franchise be

covered by Franchisee insurance if Franchisee elected not to include a deductible. Such direct coverage by Franchisee shall be in an amount equal to the amount of Franchisee's actual deductible.

7. No Limitation. Franchisee's maintenance of insurance policies required by this Franchise shall not be construed to excuse unfaithful performance by Franchisee or limit the liability of Franchisee to the coverage provided in the insurance policies, or otherwise limit the City's recourse to any other remedy available at law or in equity.

# EXHIBIT "E"

(*Financial Security*)

1. Performance Bond.

1.1 Franchisee shall provide to the City a faithful performance and payment bond in the initial amount of **$50,000** to ensure the full and faithful performance of all of its responsibilities under this Franchise and applicable Laws, including, by way of example and not limitation, its obligations to relocate and remove its Facilities, to restore the Public Rights-of-Way and other property when damaged or disturbed, to reimburse the City for its Direct Costs, and to keep Franchisee's insurance in full force.

1.2 The performance bond shall be in a form with terms and conditions reasonably acceptable to the City and reviewed and approved by the City Attorney.

1.3 The performance bond shall be with a surety with a rating no less than "A-VII" in the latest edition of "Bests Rating Guide," published by A.M. Best Company.

1.4 The Franchisee shall pay all premiums or costs associated with maintaining the performance and payment bond, and shall keep the same in full force and effect at all times. If Franchisee fails to provide or maintain the bond, then the City, in its sole discretion, may require Franchisee to substitute an equivalent cash deposit as described below in lieu of the bond.

1.5 Franchisee's maintenance of the bond(s) shall not be construed to excuse unfaithful performance by Franchisee, or limit the liability of Franchisee to the amount of the bond(s), or otherwise limit the City's recourse to any other remedy available at law or in equity.

1.6 The amount of the bond may, in the reasonable discretion of the City, be adjusted by the City to take into account (1) cumulative inflation, (2) increased risk to the City, (3) the experiences of the Parties regarding Franchisee compliance with its obligations under the Franchise, and (4) issuance of Site Specific Permits for installation of new Facilities. Prior to adjusting the amount of the bond, the City shall provide reasonable notice to the Franchisee and an opportunity to provide comments, and the City shall review and consider such comments that are timely made.

2. Cash Deposit/Irrevocable Letter of Credit in Lieu of Bond.

Franchisee may, at its election, substitute an equivalent cash deposit with an escrow agent approved by the City or an irrevocable letter of credit in form and content reasonably approved by the City Attorney, instead of a performance and payment bond. This cash deposit or irrevocable letter of credit shall ensure the full and faithful performance of all of Franchisee's responsibilities hereto under this Franchise and all

applicable Laws. This includes but, is not limited to, its obligations to relocate or remove its facilities, restore the Public Rights-of-Way and other property to their original condition, reimburse the City for its costs, and keep Franchisee's insurance in full force.

In the event that the Franchisee fails to cure a Default as provided in Section 6 of the Franchise, the City may, at its option, draw upon the cash deposit or letter of credit up to the amount of the City's costs incurred to cure Franchisee's default. Upon the City's cure of Franchisee's default, the City shall notify Franchisee in writing of such cure.

In the event that the City draws upon the cash deposit or letter of credit, Franchisee shall thereupon replenish the cash deposit or letter of credit to the full amount as specified herein or provide a replacement performance and payment bond.

# EXHIBIT "F"

(*Contractor/Subcontractor Insurance Requirements*)

1. General Requirement. Prior to commencing and during the period of Work performed within the Franchise Area, Franchisee's contractors and subcontractors (hereafter the "Contractors") must have in place adequate insurance to protect the City against claims for death or injuries to Persons or damages to property or equipment which in any way relate to, arise from, or are connected with this such Work.

2. Minimum Insurance Limits. The Contractors shall maintain the following minimum insurance coverages and limits:

2.1 Commercial General Liability: insurance to cover liability, bodily injury, and property damage. The Commercial General Liability insurance shall be written on an occurrence basis, and shall provide coverage for any and all costs, including reasonable defense costs, and losses and damages resulting from personal injury, bodily injury and death, property damage, products liability and completed operations. Coverage must be written with the following limits of liability:

$1,000,000 per occurrence,
$2,000,000 general aggregate and
$1,000,000 products/completed operations aggregate.

2.2 Automobile Liability: shall include owned, hired, and non-owned vehicles on an occurrence basis with coverage of at least $1,000,000 per occurrence.

2.3 Workers Compensation Insurance: shall be maintained during the period of such Work to comply with statutory limits for all employees.

3. Endorsements. Commercial General Liability insurance policies shall contain, or be endorsed to contain, the following:

3.1 The Contractor's insurance coverage is primary insurance with respect to the City. Any insurance, self-insurance, or insurance pool coverage maintained by the City shall be in excess of the Contractor's insurance and shall not contribute to it.

3.2 Contractor, through policy endorsement, waives its rights of subrogation against the City for all claims and suits.

3.3 That the coverage applies separately to each insured against whom a claim is made or suit is brought, except with respect to the limits of the insurer's liability.

3.4 The Contractor's insurance shall name the City as an additional insured, to protect or insure as an additional insured, from and against Liabilities arising out of Work performed in the Public Rights-of-Way under a grant of authority of the City.

3.5 The Contractor's insurance shall include a requirement that the "railroad exclusion" be deleted or may include, in the alternative, ISO endorsement CG 24 17 or equivalent.

3.6 The insurance coverages and limits provided herein shall not be canceled without thirty (30) days written notice first being given to the City, with the exception that ten (10) days' notice is required for cancellation resulting from non-payment of premium. If the insurance is canceled or reduced in coverage, Franchisee shall provide a replacement policy.

4. Acceptability of Insurers. Each insurance policy required herein shall be issued by financially sound insurers who may lawfully do business in the State of Washington with a financial strength rating at all times during coverage of no less than an "A-"and in a financial size category of no less than "VII", in the latest edition of "Best's Rating Guide" published by A.M. Best Company. In the event that at any time during coverage, the insurer does not meet the foregoing standards, Contractor shall give prompt notice to the City and shall seek coverage from an insurer that meets the foregoing standards. The City reserves the right to change the rating or the rating guide depending upon the changed risks or availability of other suitable and reliable rating guides.

5. Verification of Coverage. The Franchisee shall furnish the City with Contractors' signed certificates of insurance and a copy of the amendatory endorsements, including, but not necessarily limited to, the additional insured endorsement, evidencing the Automobile Liability and Commercial General Liability policies of the Contractors. The certificate for each insurance policy is to be signed by a Person authorized by that insurer to bind coverage on its behalf. The certificate for each insurance policy must be on standard forms or on such forms as are consistent with standard industry practices.

6. No Limitation. Contractor's maintenance of insurance policies required herein shall not be construed to excuse unfaithful performance by Franchisee or limit the liability of Franchisee or contractor to the coverage provided in the insurance policies, or otherwise limit the City's recourse to any other remedy available at law or in equity.

Exhibit 1

# Interlocal Agreement:

# Issaquah School District Joint-Use Agreement

# Information to be provided at the May 2, 2017 Council meeting.

# City Council Agenda Bill

**Meeting Date:** May 2, 2017 Date Submitted: 4/26/2017

**Originating Department:** Parks and Recreation

**Clearances:**

- [x] Attorney
- [ ] Admin Services
- [x] City Manager
- [ ] Community Development
- [ ] Finance & IT
- [x] Parks & Recreation
- [ ] Public Safety
- [ ] Public Works

**Subject:** Bid Award for the Skyline High School Community Sports Field Synthetic Turf Replacement Project

**Action Required:** Authorize the City Manager to execute a contract with Coast to Coast Turf, Inc. for the construction of the Skyline Community Sports Field Synthetic Turf Replacement Project.

**Exhibits:**

1. Bid Tab
2. Memorandum of Understanding (MOU)
3. Field Location Map

**Budget:** $1,400,000 is allocated in the 2017-18 Parks CIP budget for the Skyline High School Community Sports Field Synthetic Turf Replacement Project.

---

**Summary Statement:**

This is a construction contract for the Skyline Community Sports Field Synthetic Turf Replacement Project and includes site preparation, installation of a new synthetic turf system with coated styrene butadiene rubber (SBR) infill, a supplemental elastic layer pad system, drainage improvements and site furnishings.

The project was bid on February 8, 2017. Bids were opened on March 9, 2017 and a total of five bids were received. The responsible bidder was determined by the lowest total bid (sum of the Base Bid and all bid alternatives). Coast to Coast Turf, Inc. submitted a bid in the amount of $1,060,874 + WSST, which is $339,126 below the engineer's estimate of $1.38 million. Staff evaluated the bids and Coast to Coast Turf, Inc. was identified as the lowest responsive and responsible bidder.

**Background:**

In 2007, in partnership with the Issaquah School District, the City converted an existing, underutilized 4-acre grass practice field on the SHS campus into two multi-use synthetic turf sports fields with lighting. These fields, also known as SHS Fields 1 and 2, accommodate baseball, softball, football, lacrosse and soccer for adult and youth sports league practices and games as well as for students at SHS.

Having been in use for nearly 10-years, the turf is showing signs of breakdown that can no longer be repaired. Additionally, the City completes an annual compaction test (commonly referred to as g-max testing,) which measures the shock attenuation performance of the field surface. To date, these tests have indicated that the turf is performing within acceptable levels, but as the turf profile continues to wear down it is unlikely the fields will pass the compaction tests, resulting in unsafe playing conditions and necessitating a field closure.

The City and the Issaquah School District (District) executed a Memorandum of Understanding (MOU) in November 2016 agreeing to share the costs (50/50 split) of the turf replacement project. This MOU also committed both entities to revising the Interlocal Agreement to address a number of operational changes, including the change in the SHS schedule.

At the time this agenda bill was prepared, staff were still negotiating with the District on the revised Interlocal Agreement. The intent is to bring a final Interlocal Agreement for City Council review and approval on May 2, 2017. The Interlocal Agreement will be scheduled for discussion prior to the City Council making a decision on the bid award for the SHS Turf Replacement Project.

It should be noted that delaying the bid award beyond May 2 is problematic due to the lead time required to procure the materials for the project (the turf itself is a custom order). If the bid award is delayed beyond May 2, the project may not be completed during the summer months and will likely have an impact on scheduling of the fall sports programs. Staff from the City and the District are making a good faith effort to reach agreement on the Interlocal Agreement to minimize impacts to the field users.

**Overview of the Project Bid:**
The bid included a total of three additive alternates as noted in the attached bid tab. The following table includes a description of the Base Bid and Alternate Bid components.

| **Bid Proposal Description** |
|---|
| Base Bid<br>Includes site preparation, installation of a new synthetic turf system with coated SBR infill, a supplemental elastic layer pad system, drainage improvements and site furnishings. The infill selection is the same product selected for the Eastlake High School Turf Replacement Project completed in 2016. |
| Alternate 1 – Chain Link Fencing<br>Remove and replace specific damaged sections of chain link fencing along the east and west perimeter of the field. |
| Alternate 2 – Soccer Goals<br>Includes the installation of four (4) new soccer goals. |
| Alternate 3 – Batter's Box Lettering<br>Install synthetic turf letters at the home plate of the Varsity Softball Field. This alternate was added at the request of the District. All costs associated with this alternate will be directly reimbursed to the City by the District. |

Upon further review, the staff and consultant team recommend awarding the Base Bid plus all Alternate Bid items. The project costs are summarized in the table below.

| Staff Recommendation | Construction Bid |
|---|---|
| Lump Sum Base Bid | $1,020,924.00 |
| Alternate #1: Chain Link Fencing | $ 26,240.00 |
| Alternate #2: Soccer Goals | $ 10,700.00 |
| Alternate #3: Batter's Box Lettering | $ 3,010.00 |
| WSST (10%) | $ 106,087.40 |
| **Total Construction Costs** | **$1,166,961.40** |

**Project Schedule (Based on a May 2 Bid Award):**

- Design and Permitting: Winter 2016
- Bid: February/March 2017
- Construction: June-August 2017
- Field Opening: Late August 2017

It is anticipated the construction work will take approximately 60 days to complete. If the bid award occurs on May 2, the construction project will conclude sometime in mid-August in time for the start of the fall sports season.

**Financial Impact:**
A total of $1,400,000 is allocated in the 2017-18 Budget (Parks CIP) for the Skyline Community Sports Field Synthetic Turf Replacement Project. The total project costs are summarized in the table below.

| **Project Costs:** | |
|---|---|
| Total Construction Costs | $1,166,961.40 |
| Construction Contingency | $ 50,000.00 |
| Design Contract | $ 49,750.00 |
| **Total Estimated Project Cost** | $1,266,711.40 |

Per the MOU between the City and the District, signed November, 2016, the City and District will each be responsible for half of the project costs. In addition, the District will reimburse the City for the total costs associated with Alternate 3 – Batter's Box lettering, amounting to $3,010.00 + WSST.

**Recommended Motion:**
Move to accept the bid from Coast to Coast Turf, Inc. as the lowest responsive and responsible bid for the Skyline Community Field Synthetic Turf Replacement Project and authorize the City Manager to award the Base Bid plus all Alternates and execute a contract with Coast to Coast Turf, Inc. in the amount of $1,060,874.00 + WSST and to administer a $50,000 construction contingency. Further, the Notice-to-Proceed may not be issued until the revised Interlocal Agreement is approved by both parties.

Exhibit 1

# City of Sammamish - BID OPENING

Parks and Recreation

Skyline Community Field Synthetic Turf Replacement

March 9, 2017 3:00pm

| Bidder | Base Bid | Additive Alternate 1 | Additive Alternate 2 | Additive Alternate 3 | Total Bid | Total Bid + WSST (10%) |
|---|---|---|---|---|---|---|
| Shaw Sports Turf | $1,220,452.00 | $36,321.00 | $17,399.00 | $3,108.00 | $1,277,280.00 | $1,405,008.00 |
| FieldTurf USA, Inc. | $1,064,565.00 | $30,426.00 | $16,280.00 | $4,000.00 | $1,115,271.00 | $1,226,798.10 |
| Coast to Coast Turf, Inc. | $1,020,924.00 | $26,240.00 | $10,700.00 | $3,010.00 | $1,060,874.00 | $1,166,961.40 |
| SprinTurf, LLC. | $1,175,054.00 | $26,080.00 | $13,711.00 | $3,762.00 | $1,218,607.00 | $1,340,467.70 |
| Hellas Construction, Inc. | $1,314,000.00 | $51,000.00 | $9,500.00 | $2,000.00 | $1,376,500.00 | $1,514,150.00 |

**Notes:**

| | |
|---|---|
| Base Bid | Installation of new synthetic turf system with coated SBR infill, supplemental elastic layer pad system, drainage improvements. |
| Additive Alternate 1 | Remove and replace specific damaged sections of chain link fencing along the east and west perimeter of the field. |
| Additive Alternate 2 | Installation of four (4) new soccer goals. |
| Additive Alternate 3 | Installation of synthetic turf letters at the home plate of the Varsity Softball Field. |

**Apparent Low Bidder:** **Coast to Coast Turf, Inc.**

Engineers Estimate $1.38 million

A contract will be awarded, if at all, based on the lowest responsible bidder for the **Total Bid Price** for all schedules. Bid alternative schedules may or may not be awarded.
Award date anticipated **April 18, 2017.**

Exhibit 1

Exhibit 1

Exhibit 2

# COMMUNITY SPORTS FIELD MEMORANDUM OF UNDERSTANDING BETWEEN THE CITY OF SAMMAMISH AND THE ISSAQUAH SCHOOL DISTRICT

This Memorandum of Understanding ("MOU") is made and entered into by and between the City of Sammamish, a Washington municipal corporation ("City"), and the Issaquah School District No. 411, a Washington municipal corporation ("District"), each of which is referred to individually as a "Party" or collectively as the "Parties."

WHEREAS, the City and the District entered into an Interlocal Agreement Regarding Joint Use, Development and Maintenance of City and District Properties ("Interlocal Agreement") on June 21, 2004, and

WHEREAS, the City and the District amended the Interlocal on November 22, 2005 ("Amendment #1") to provide for the development of new Community Sports Fields at Skyline High School ("Fields"), and

WHEREAS, the City and the District amended the Interlocal on June 15, 2010 ("Amendment #2") to modify the shared-use hours at the Fields, and

WHEREAS, the synthetic turf field surface at the Fields is at the end of its useful life, and the turf field surface is scheduled to be replaced in the summer of 2017 ("the Project"), and

WHEREAS, it is essential that design work for the Project commence immediately in order for the City to put the Project out to bid during the first quarter of 2017 to meet the summer 2017 construction schedule, and

WHEREAS, the District is contemplating a change to school hours, including school hours at Skyline High School, which change in school hours would reduce the number of weekday hours available for community use on the Fields, and

WHEREAS, the City and the District, in the spirit of the original partnership as reflected in the Interlocal Agreement as amended, and in support of youth athletics in Sammamish, are committed to negotiating a new Interlocal Agreement to address the shared-use hours, shared financial responsibilities (both maintenance and capital replacement), scheduling responsibilities and other operating terms of the Interlocal Agreement in the first quarter of 2017,

NOW, THEREFORE, the Parties accordingly agree as follows:

EXHIBIT 2

1. The City shall serve as the lead on the Project and will coordinate design, bidding and construction.

2. The current Project cost estimate is $1,400,000.00. The City and the District will each be responsible for half of the actual Project costs. Promptly upon approval by the City's Project manager of a pay request from the Project contractor, the City shall provide the District with a copy of the approved pay request. The District shall make payment in an amount equal to one-half of the approved pay request amount to the City within 20 days, or otherwise in order to ensure timely payment to the Project contractor of each approved pay request.

3. The City and the District will negotiate a new Interlocal Agreement in the first quarter of 2017 to address the change in school hours and negotiate revised community use hours. It is understood that there will be a reduction in community shared-use hours on the fields as a result of the school schedule change.

4. The new Interlocal Agreement will provide for shared maintenance costs and capital replacement costs based on each Party's proportionate share of field use.

5. The City and the District remain committed to shared-use facilities and will seek to identify other opportunities for shared facilities to expand community access to fields.

**Accepted for City of Sammamish:**

Lyman Howard, City Manager

November 9, 2016

*Date*

**Accepted for Issaquah School District:**

Jacob Kuper, CFO/COO

November 2, 2016

*Date*

Exhibit 3

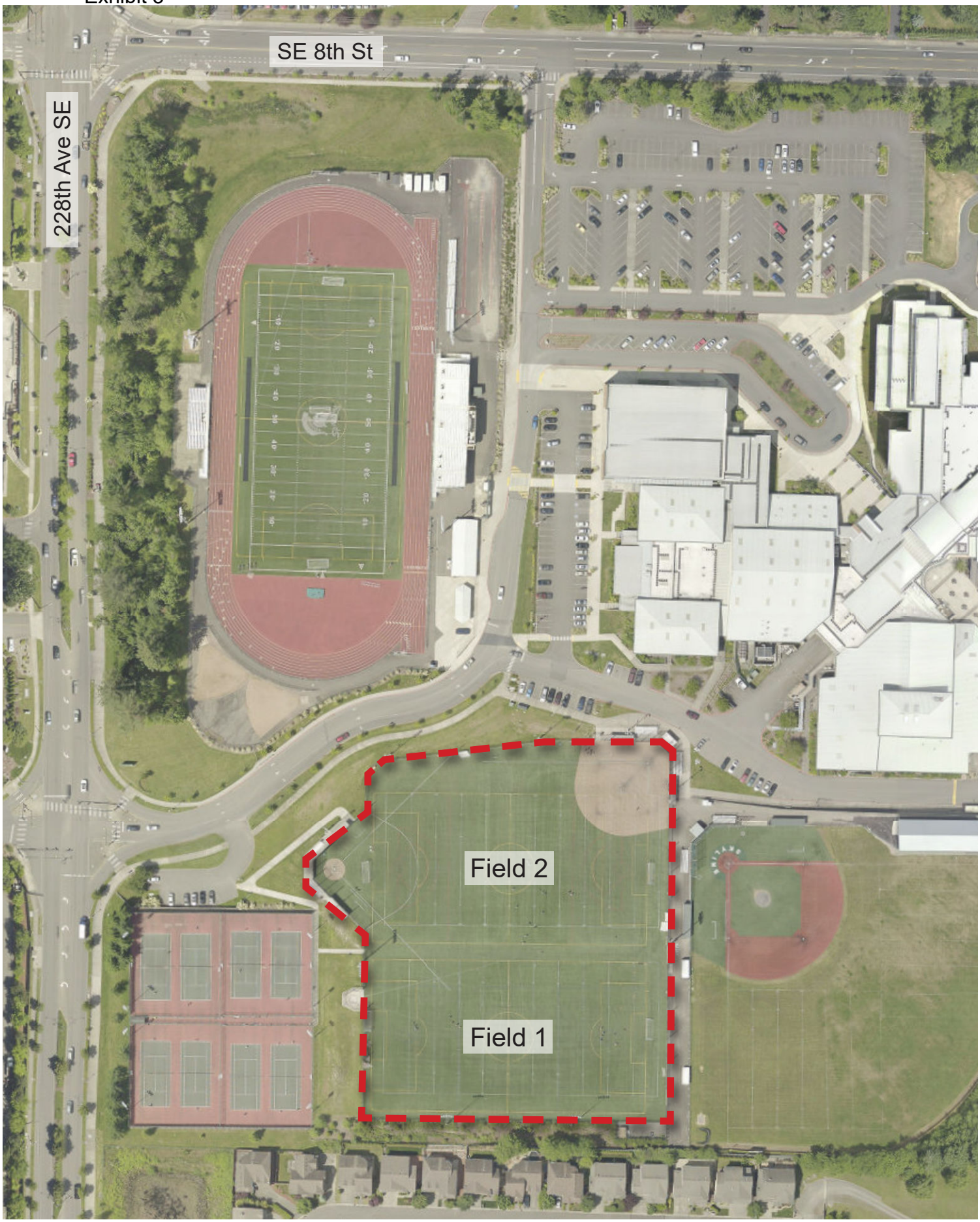


Exhibit 3: Skyline High School Community Fields

N

Exhibit 3

# Department Update:

# Public Works

Exhibit 1

# Memorandum

**Date:** May 2, 2017

**To:** City Council

**From:** Lyman Howard, City Manager
Steve Leniszewski, P.E., Public Works Director

**Subject:** Surface Water Design Manual and LID Code Updates

In 2016, the City Council adopted ordinances to update major stormwater codes that addressed new policies recommended by the Planning Commission. Most of the changes were required to be adopted by the end of last year in accordance to the City's National Pollutant Discharge and Elimination System (NPDES) Phase 2 Permit with the Department of Ecology.

A number of public comments were submitted to council and were addressed in a meeting between Public Works Sr. Stormwater Program Manager Tawni Dalziel and Ms. Mary Wictor on December 12, 2016. This memo provides a response to remaining comments about how these new stormwater codes should be implemented.

**Background:**

At the December 13, 2016 City Council Meeting, the City Council passed two ordinances to meet City's NPDES permit requirements. They included adoption of Ordinance 2016-429 Low Impact Development Code Amendments and Ordinance 2016-428 Sammamish Municipal Code Title 13 – Surface Water Management.

The ordinances made the following major changes to the stormwater codes:

1. Added landslide hazard drainage areas as Critical Areas, that are subject to drainage review and disallowed basic exemptions to Core Requirements unless approved by the Public Work Director. Landslide hazard drainage areas are defined as areas draining to landslide hazard areas.

2. For all projects subject to drainage review, Low Impact Development (LID) is required to be implemented on all projects, unless shown to be infeasible. Feasibility is not based on cost benefit but on site characteristics such as soil infiltration rate, availability of vegetated flow path for dispersion, and risk of flooding or erosion to downstream properties.

3. Stormwater facilities are required to be attractive amenities to a development site with numerical standards to meet this intent. Recreation credits are available for some added recreation features.

Exhibit 1

**Public Comments and Staff Response:**

The following are the remaining unresolved comments that Ms. Mary Wictor presented to Council on December 13, 2016, when the above codes were adopted, and staff's responses.

1. Maps and City GIS should be updated to include areas where LID should NOT be used (similar to Bellevue's Infiltration Infeasibility map).

   Staff Response: We agree that developers would benefit from such a map because they would not have to produce a geotechnical report showing that LID is infeasible. However, early feedback from the Department of Ecology has indicated that these maps do not relieve the developer of the responsibility for proving that LID is infeasible. In addition, creating such a map would require significant staff and consultant time to review all existing geotechnical studies on file, interpreting the data, and creating a map in GIS.

2. Obtain input from Inglewood area developers regarding drainage review and tightlining requirements. Assess how Tamarack area might be affected by drainage requirements.

   Staff response: Staff plan to meet with residents in Inglewood and Tamarack who have expressed concerns that stormwater requirements are too stringent for single family residential development in the next few months. Any changes to the code will be presented to the Planning Commission and City Council through the City's public process.

3. Change color of Erosion overlay maps to use a no conflict shading.

   Staff response: Changes to color in mapping will be updated as time and resources allow within the City's GIS group.

4. Do not allow reduction of stormwater facility size if using LID.

   Staff response: The Department of Ecology has indicated that the minimal sizing credits allowed in the *2016 King County Surface Water Design Manual* cannot be modified.

5. Require pre-clearing and grading photo and /or inspection to ensure clearing limits are marked and respected.

   Staff response: Temporary Sediment and Erosion Control (TESC) inspection has been added as a specific item on our Inspector's list of features to inspect, similar to a foundation, frame, and roof. This will ensure that the inspector authorizes clearing limits and TESC measures in accordance with the approved plans prior to major construction occurring.

6. Consider requiring a 1- year Maintenance Surety Bond period. Consider requiring a 1- year landscaping bond to ensure construction and restoration are stable and working.

   Staff response: The following bonds are required for development requiring drainage review and provide greater protection than the request:

   - Restoration bond – Bond amount covers restoration of the site
   - 2- year Performance bond – Bond amount covers all permanent infrastructure
   - 2-year Maintenance and Defect Bond – Bond covers M&D for up to 2 years
   - Landscaping Performance Bond – Bond covers landscaping

7. Small language changes, typos, errors, omissions in code should be reviewed and edited.

Staff Response: The stormwater code will be reviewed and minor changes will be made for clarity and errors as needed.

Exhibit 1